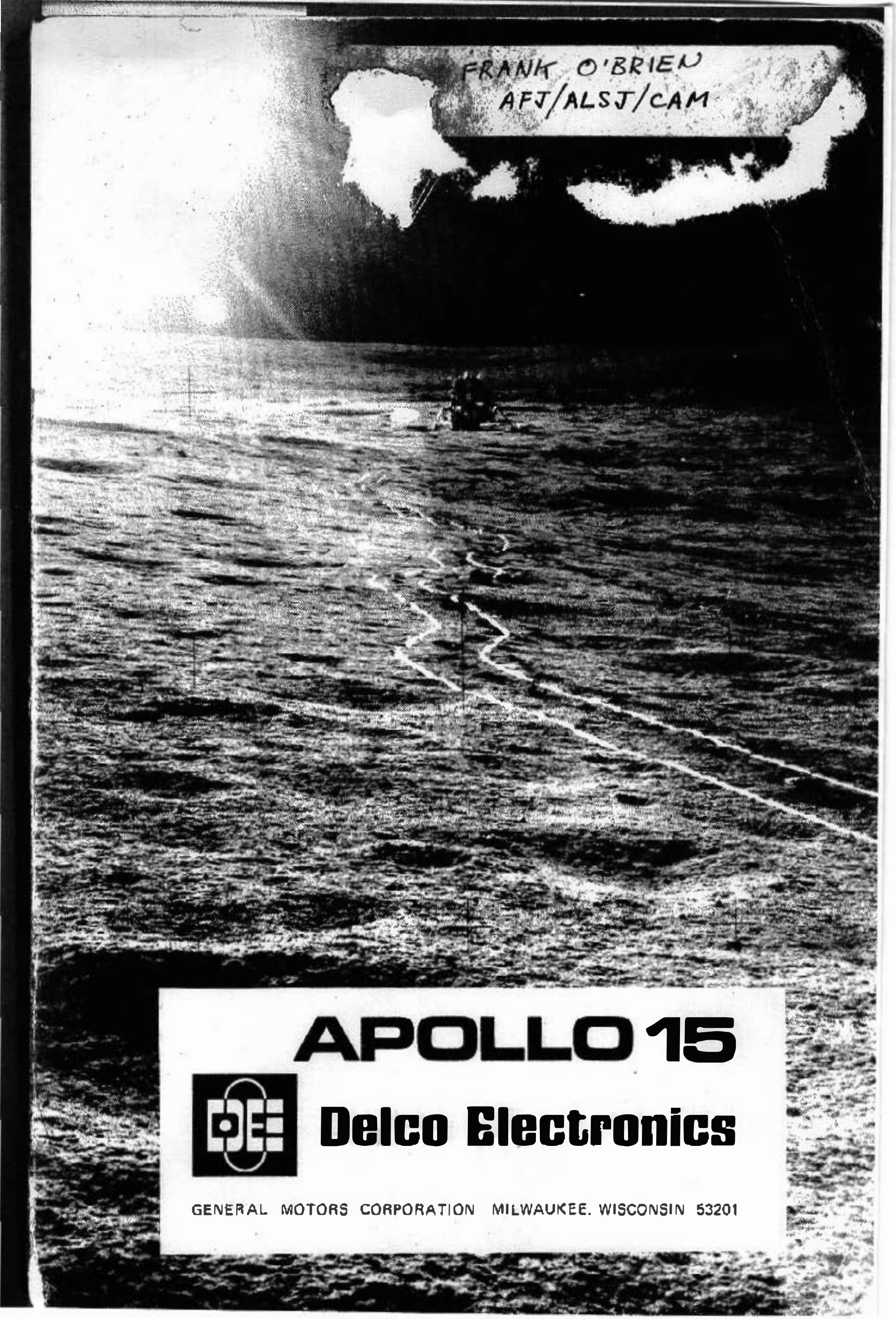
FRANK O'BRIEN
AFJ/ALSJ/CAM
APOLLO 15
Delco Electronics
GENERAL MOTORS CORPORATION MILWAUKEE. WISCONSIN 53201

CM SOFTWARE

COLOSSUS 3
(ARTEMIS REV 72)
CM DSKY
COMPUTER PROGRAMS
COMPUTER ROUTINES
VERB CODES
NOUN CODES
ALARM CODES
OPTION CODES
CHECKLIST CODES
FLAGWORD BIT ASSIGNMENTS
IMODES30 AND IMODES33
OPTMODES
RCSFLAGS
DAPDATR1 AND DAPDATR2
CHANNEL BIT ASSIGNMENTS
COMPUTER PROGRAM DESCRIPTION

CM DSKY

UPLINK ACTY Light

1. Is energized by the first character of a digital UPLINK message received by the AGC.
2. Is energized during the Rendezvous Navigation program (P20) when the Tracking Attitude routine (R61) detects that a gimbal angle change of greater than 10 degrees is required to align the CSM to the desired attitude and that the V50 N18 flag is not set.
3. Is energized in the Saturn TB-6 Initiation program (P15) during the 10-second interval when the S-IVB Injection Sequence Start bit (Channel 12, bit 13) is set. It is deenergized at the end of the 10-second interval.

NO ATT Light — is energized when the AGC is in the Operate mode and there is no inertial reference: that is, the ISS is off, caged, or in the Coarse Align mode.

STBY Light — is energized when the AGC is in the Standby mode and deenergized when the AGC is in the Operate mode.

KEY REL Light

1. Energized when:
   a. An internal display comes up while astronaut has the DSKY.
   b. An astronaut keystroke is made when an internal flashing display is currently on the DSKY.
   c. The astronaut makes a keystroke on top of (his own) Monitor Verb Display.
2. Deenergized when:
   a. Astronaut relinquishes DSKY by hitting KEY REL button.
   b. Astronaut terminates his current sequence normally, for example,
      (1) With final ENTR of a load sequence.
      (2) The ENTR of a response to a flashing display.
      (3) The ENTR of an extended verb request.

OPR ERR Light — is energized when the DSKY operator performs an improper sequence of key depressions. The light is deenergized by pressing the RSET button.

TEMP Light — The AGC receives a signal from the IMU when the stable member temperature is in the range 126.3 ^{o} F to 134.3^{o} F. In the absence of this signal, the TEMP light on the DSKY is actuated.

GIMBAL LOCK Light — is energized when the middle gimbal angle exceeds $\pm$ 70 degrees from its zero position. When the middle gimbal angle exceeds $\pm$ 85 degrees from its zero position, the AGC automatically commands the Coarse Align mode in the ISS to prevent gimbal oscillation (except when the S-IVB is attached). The NO ATT light will then be energized.

PROG Light — The program alarm actuates the PROG light on the DSKY. A program alarm is generated under a variety of situations.

RESTART Light — In the event of a RESTART during operation of a program, a latch is set in the AGC which maintains the RESTART light on the DSKY until the latch is manually reset by pressing RSET.

TRACKER Light

1. The presence of an Optics CDU Fail signal will cause the TRACKER light to be energized.
2. In addition, the TRACKER light is energized during the Rendezvous Navigation program (P20) when the Rendezvous Data Processing routine (R22) reads VHF range data via the VHF DATA link but the DATA GOOD discrete is missing.
3. It is deenergized if the DATA GOOD discrete is present after reading VHF range data and by keying in V88E (shuts off the VHF range data processing section of R22).
4. It is deenergized when the conditions of 1 above no longer exist.

CM DSKY (CONTINUED)

COMP ACTY Light —is energized when the AGC is occupied with an internal sequence.

Display Panel — consists of 24 electroluminescent sections. Each section is capable of displaying any decimal character or remaining blank, except the three sign sections. These display a plus sign, a minus sign, or a blank. The numerical sections are grouped to form three data display registers, each of five numerical characters; and three control display registers, each of two numerical characters. The data display registers are referred to as R1, R2, R3. The control display registers are known as VERB, NOUN, and PROGRAM.

Keyboard —contains the following buttons:

1. VERB — pushing this button indicates that the next two numerical characters keyed in are to be interpreted as the Verb Code.
2. NOUN — pushing this button indicates that the next two numerical characters keyed in are to be interpreted as the Noun Code.
3. + and — — are sign keys used for sign convention and to identify decimal data.
4. 0 - 9 —are numerical keys.
5. CLR — Used during a data loading sequence to clear or blank the data display register (R1, R2, R3) being used. It allows the operator to reload the data word.
6. PRO —This pushbutton performs two functions:
   a. When the AGC is in a Standby mode, pressing this button will put the AGC in the Operate mode, turn off the STBY light, and automatically select Routine 00 in the AGC.
   b1. When the AGC is in the Operate mode but Program 06 is not selected, pressing the button will provide the "Proceed" function. If the proceed button is pressed when VERB lights contain 21, 22, or 23, the action is rejected and the OPR ERR light is energized.
   b2. When the AGC is in the Operate mode and Program 06 is selected, pressing the button will put the AGC in the Standby mode and turn on the STBY light.
7. ENTR —is used in three ways:
   a. To direct the AGC to execute the Verb/Noun code now appearing on the Verb/Noun lights.
   b. To direct the AGC to accept a data word just loaded.
   c. In response to a "please perform" request.
8. RSET —turns off alarm conditions on the DSKY providing the alarm condition has been corrected.

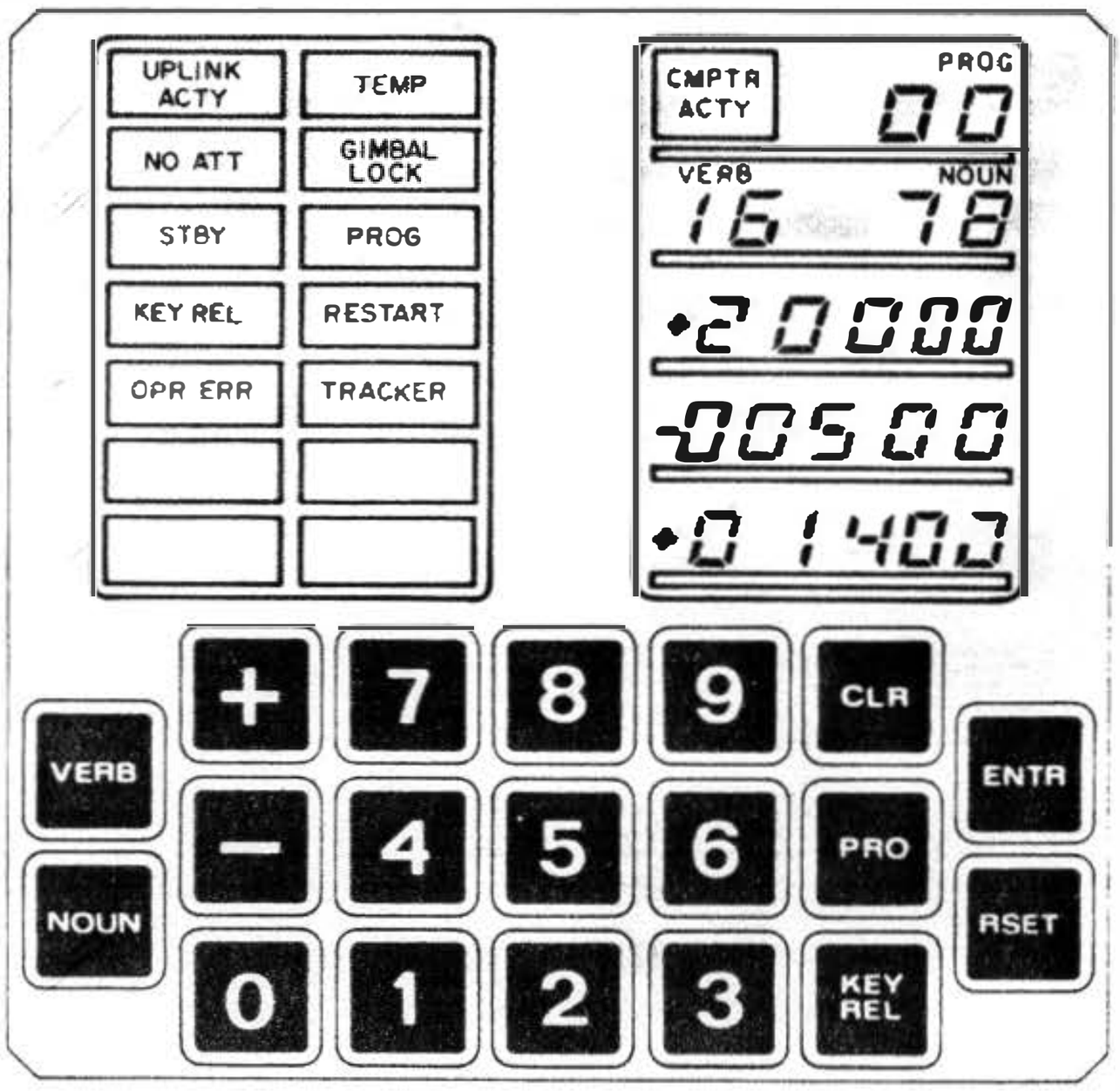

LIST OF PROGRAMS FOR PROGRAM COLOSSUS

PHASE	PROGRAM	PROGRAM TITLE
Pre launch and Service	00	AGC Idling
	01	Prelaunch or Service-Initialization
	02	Prelaunch or Service-Gyrocompassing
	03	Prelaunch or Service-Optical Verification of Gyrocompassing
	06	AGC Power Down
	07	System Test
Boost	11	Earth Orbit Insertion Monitor
	15	TLI Initiate/Cutoff
Coast	20	Universal Tracking
	21	Ground Track Determination
	22	Orbital Navigation
	23	Cislunar Midcourse Navigation
	24	Rate Aided Optics Tracking
	27	AGC Update
	29	Time-of-Longitude
Pre-thrusting	30	External Delta V
	31	CSM Height Adjustment Maneuver (HAM)
	32	CSM Coelliptic Sequence Initiation (CSI)
	33	CSM Constant Delta Altitude (CDH)
	34	CSM Transfer Phase Initiation (TPI) Targeting
	35	CSM Transfer Phase Midcourse (TPM) Targeting
	36	CSM Plane Change (PC) Targeting
	37	Return to Earth
Thrusting	40	SPC
	41	RCS
	47	Thrust Monitor
Align-ment	51	IMU Orientation Determination
	52	IMU Realign
	53	Backup IMU Orientation Determination
	54	Backup IMU Realign
Entry	61	Entry—Preparation
	62	Entry—CM/SM Separation and Preentry Maneuver
	63	Entry—Initialization
	64	Entry—Post 0.05G
	65	Entry—Upcontrol
	66	Entry—Ballistic
	67	Entry—Final Phase
Pre-thrusting	72	LM Coelliptic Sequence Initiation (CSI)
	73	LM Constant Delta Altitude (CDH)
Other Vehicle	74	LM Transfer Phase Initiation (TPI) Targeting
	75	LM Transfer Phase (Midcourse) Targeting
	76	LM Target Delta V
	77	CSM Target Delta V
	79	Rendezvous Final Phase

LIST OF ROUTINES FOR PROGRAM COLOSSUS

ROUTINE	ROUTINE TITLE
00	Final Automatic Request Terminate
01	Erasable and Channel Modification Routine
02	IMU Status Check
03	Digital Autopilot Data Load
05	S-Band Antenna
07	MINKEY Controller
21	Rendezvous Tracking Sighting Mark
22	Rendezvous Tracking Data Processing
23	Backup Rendezvous Tracking Sighting Mark
30	Orbit Parameter Display
31	Rendezvous Parameter Display Routine No. 1
33	AGC/LGC Clock Synchronization
34	Rendezvous Parameter Display Routine No. 2
35	Lunar Landmark Selection
36	Rendezvous Out-of-Plane Display Routine
40	SPS Thrust Fail
41	State Vector Integration (MID to AVE)
50	Coarse Align
52	Automatic Optics Positioning
53	Sighting Mark
54	Sighting Mark Display
55	Gyro Torquing
56	Alternate LOS Sighting Mark
57	Optics Calibration
60	Attitude Maneuver
61	Tracking Attitude
62	Crew-Defined Maneuver
63	Rendezvous Final Attitude
67	Universal Tracking Rotation

LIST OF VERBS USED IN PROGRAM COLOSSUS

REGULAR VERBS

00 Not in use
01 Display Octal Component 1 in R1
02 Display Octal Component 2 in R1
03 Display Octal Component 3 in R1
04 Display Octal Components 1, 2 in R1, R2
05 Display Octal Components 1, 2, 3 in R1, R2, R3
06 Display decimal in R1 or R1, R2 or R1, R2, R3
07 Display DP decimal in R1, R2 (test only)
08 Spare
09 Spare
10 Spare
11 Monitor Octal Component 1 in R1
12 Monitor Octal Component 2 in R1
13 Monitor Octal Component 3 in R1
14 Monitor Octal Components 1, 2 in R1, R2
15 Monitor Octal Components 1, 2, 3 in R1, R2, R3
16 Monitor decimal in R1 or R1, R2 or R1, R2, R3
17 Monitor DP decimal in R1, R2 (test only)
18 Spare
19 Spare
20 Spare
21 Load Component 1 into R1
22 Load Component 2 into R2
23 Load Component 3 into R3
24 Load Components 1, 2 into R1, R2
25 Load Components 1, 2, 3 into R1, R2, R3
26 Spare
27 Display Fixed Memory
28 Spare
29 Spare
30 Request EXECUTIVE
31 Request WAITLIST
32 Recycle program
33 Proceed without DSKY inputs
34 Terminate function
35 Test lights
36 Request FRESH START
37 Change program (major mode)
38 Spare
39 Spare

EXTENDED VERBS

40 Zero ICDU
41 Coarse align CDU's (specify N20 or N91)
42 Pulse torque gyros
43 Load IMU attitude error needles (test only)
44 Set Surface flag
45 Reset Surface flag
46 Establish G & N autopilot control
47 Move LM state vector into CM state vector
48 Request DAP Data Load routine (R03)
49 Start automatic attitude maneuver

LIST OF VERBS USED IN PROGRAM COLOSSUS

50 Please perform
51 Please mark
52 Mark on offset landing site
53 Please perform COAS mark
54 Request Rendezvous Backup Sighting Mark routine (R23)
55 Increment AGC time (decimal)
56 Terminate tracking (P20)
57 Request display of full track flag (FULTKFLAG)
58 Reset Stick flag and set V50 N18 flag
59 Please calibrate
60 Set astronaut total attitude (N 17) to present attitude
61 Display DAP following attitude errors (Mode 1)
62 Display total attitude errors with respect to Noun 22 (Mode 2)
63 Display total astronaut attitude error with respect to Noun 17 (Mode 3)
64 Request S-Band Antenna routine (R05)
65 Optical verification of prelaunch alignment
66 Vehicles are attached. Move this vehicle state vector to other vehicle.
67 Start W-matrix RMS error display
68 Spare
69 Cause RESTART
70 Update liftoff time (P27)
71 Start AGC update; block address (P27)
72 Start AGC update; single address (P27)
73 Start AGC update; AGC time (P27)
74 Initialize erasable dump via DOWNLINK
75 Backup liftoff
76 Spare
77 Spare
78 Update prelaunch azimuth
79 Spare
80 Enable LM state vector update
81 Enable CSM state vector update
82 Request Orbit Parameter display (R30)
83 Request Rendezvous Parameter display No. 1 (R31)
84 Spare
85 Request Rendezvous Parameter display No. 2 (R34)
86 Reject Rendezvous Backup Sighting Mark
87 Set VHF Range flag
88 Reset VHF Range flag
89 Request Rendezvous Final Attitude maneuver (R63)
90 Request Out of Plane Rendezvous display (R36)
91 Display BANKSUM
92 Spare
93 Enable W matrix initialization
94 Perform Cislunar Attitude maneuver
95 Spare
96 Terminate integration and go to P00
97 Please perform engine-fail (R40)
98 Spare
99 Please Enable Engine Ignition

LIST OF NOUNS USED IN PROGRAM COLOSSUS

00	Not in use		
01	Specify address (fractional)		.XXXXX fractional .XXXXX fractional .XXXXX fractional
02	Specify address (whole)		XXXXX. integer XXXXX. integer XXXXX. integer
03	Specify address (degree)		XXX.XX deg XXX.XX deg XXX.XX deg
04	Spare		
05	Angular error/difference		XXX.XX deg
06	Option code ID Option code		Octal Octal
07	FLAGWORD operator		
	ECADR BIT ID Action		Octal Octal Octal
08	Alarm data		
	ADRES BBANK ERCOUNT		Octal Octal Octal
09	Alarm codes		
	First Second Last		Octal Octal Octal
10	Channel to be specified		Octal
11	TIG of CSI		00XXX. h 000XX. min 0XX.XX s
12	Option code (extended verbs only)		Octal Octal
13	TIG of CDH		00XXX. h 000XX. min 0XX.XX s
14	Specified inertial velocity at TLI cutoff (VI C/O)		XXXXX.ft/s
15	Increment address		Octal
16	Time of event (used by extended verbs only)		00XXX. h 000XX. min 0XX.XX s
17	Astronaut total attitude	R P Y	XXX.XX deg XXX.XX deg XXX.XX deg

LIST OF NOUNS USED IN PROGRAM COLOSSUS

18	Desired automaneuver FDAI ball angles	R P Y	XXX.XX deg XXX.XX deg XXX.XX deg
19	Spare		
20	Present ICDU angles	R (OG) P (IG) Y (MG)	XXX.XX deg XXX.XX deg XXX.XX deg
21	PIPA's	X Y Z	XXXXX. pulses XXXXX. pulses XXXXX. pulses
22	Desired ICDU angles	R (OG) P (IG) Y (MG)	XXX.XX deg XXX.XX deg XXX.XX deg
23	Spare		
24	Delta time for AGC clock		00XXX. h 000XX. min 0XX.XX s
25	CHECKLIST (used with V50)		XXXXX.
26	PRIO/DELAY, ADRES, BBCON		Octal Octal Octal
27	Self-test on/off switch		XXXXX.
28	Spare		
29	XSM launch azimuth		XXX.XX deg
30	Target codes		XXXXX. XXXXX. XXXXX.
31	Time of W matrix initialization		00XXX. h 000XX. min 0XX.XX s
32	Time from perigee		00XXX. h 000XX. min 0XX.XX s
33	Time of ignition (GETI)		00XXX. h 000XX. min 0XX.XX s
34	Time of event		00XXX. h 000XX. min 0XX.XX s
35	Time from event		00XXX. h 000XX. min 0XX.XX s
36	Time of AGC clock		00XXX. h 000XX. min 0XX.XX s

LIST OF NOUNS USED IN PROGRAM COLOSSUS

37		Time of ignition (TPI)	00XXX. h 000XX. min 0XX.XX s
38		Time of state being integrated	00XXX. h 000XX. min 0XX.XX s
39		Delta time for transfer	00XXX. h 000XX. min 0XX.XX s
40	*	Time from ignition/cutoff (TFI/TFC) VG Delta V (accumulated)	XX b XX min/s XXXX.X ft/s XXXX.X ft/s
41		Target	
		Azimuth Elevation	XXX.XX deg XX.XXX deg
42	*	Apocenter altitude Pericenter altitude Delta V (required)	XXXX.X nmi XXXX.X nmi XXXX.X ft/s
43		Latitude Longitude Altitude	XXX.XX deg (+ north) XXX.XX deg (+ east) XXXX.X nmi
44	*	Apocenter altitude Pericenter altitude TFF	XXXX.X nmi XXXX.X nmi XX b XX min/s
45	*	Marks (VHF/optics) Time from ignition of next burn Middle gimbal angle	XX b XX marks XX b XX min/s XXX.XX deg
46		DAP configuration	Octal Octal
47		CSM weight LM weight	XXXXX. lbs XXXXX. lbs
48		Gimbal pitch trim Gimbal yaw trim	XXX.XX deg XXX.XX deg
49		Delta R Delta V VHF or optics code	XXXX.X nmi XXXX.X ft/s 0000X.
50	*	Splash error Perigee TFF	XXXX.X nmi XXXX.X nmi XX b XX min/s
51		S-band antenna angles	
		(RHO) (GAMMA)	XXX.XX deg XXX.XX deg
52		Central angle of active vehicle	XXX.XX deg
53		Range Range rate Phi	XXX.XX nmi XXXX.X ft/s XXX.XX deg

*Display cannot be changed via data load (that is, V25 NXXE, and so forth)

LIST OF NOUNS USED IN PROGRAM COLOSSUS

54	Range	XXX.XX nmi
	Range rate	XXXX.X ft/s
	Theta	XXX.XX deg
55	Perigee code	0000X.
	Elevation angle	XXX.XX deg
	Central angle of passive vehicle	XXX.XX deg
56	Reentry angle	XXX.XX deg
	Delta V	XXXXX. ft/s
57	Spare	
58	Pericenter altitude (post TPI)	XXXX.X nmi
	Delta V (TPI)	XXXX.X ft/s
	Delta V (TPF)	XXXX.X ft/s
59	Delta V LOS 1	XXXX.X ft/s
	Delta V LOS 2	XXXX.X ft/s
	Delta V LOS 3	XXXX.X ft/s
60	GMAX	XXX.XX g
	VPRED	XXXXX. ft/s
	GAMMA EI	XXX.XX deg (+ above)
61	Impact	
	Latitude	XXX.XX deg (+ north)
	Longitude	XXX.XX deg (+ east)
	Heads up/down	+/- 00001
62	Inertial velocity magnitude	XXXXX. ft/s
	Altitude rate	XXXXX. ft/s
	Altitude above pad radius	XXXX.X nmi
63 *	Range from EI altitude to splash	XXXX.X nmi
	Predicted inertial velocity	XXXXX. ft/s
	Time from EI altitude	XX b XX min/s
64	Drag acceleration	XXX.XX g
	Inertial velocity	XXXXX. ft/s
	Range to splash	XXXX.X nmi (+ is overshoot)
65	Sampled AGC time (fetched in interrupt)	00XXX. h 000XX. min 0XX.XX s
66	Commanded bank angle	XXX.XX deg
	Crossrange error	XXXX.X nmi (+ south)
	Downrange error	XXXX.X nmi (+ overshoot)
67	Range to target	XXXX.X nmi (+ overshoot)
	Present latitude	XXX.XX deg (+ north)
	Present longitude	XXX.XX deg (+ east)
68	Commanded bank angle	XXX.XX deg
	Inertial velocity	XXXXX. ft/s
	Altitude rate	XXXXX. ft/s
69	Commanded bank angle	XXX.XX deg
	Drag level	XXX.XX g
	Exit velocity	XXXXX. ft/s

*Display cannot be changed via data load (that is, V25NXXE, and so forth)

LIST OF NOUNS USED IN PROGRAM COLOSSUS

70	Celestial body code (before mark)	Octal
	Landmark data	Octal
	Horizon data	Octal
71	Celestial body code (after mark)	Octal
	Landmark data	Octal
	Horizon data	Octal
72	Spare	
73	Altitude	XXXXXb. nmi
	Velocity	XXXXX. ft/s
	Flight path angle	XXX.XX deg
74	Commanded bank angle	XXX.XX deg
	Inertial velocity	XXXXX. ft/s
	Drag acceleration	XXX.XX g
75 *	Delta altitude (CDH)	XXXX.X nmi
	Delta time (CDH-CSI or TPI-CDH)	XX b XX min/s
	Delta time (TPI-CDH or TPI-NOMTPI)	XX b XX min/s
76	Spare	
77	Spare	
78	GAMMA	XXX.XX deg
	RHO	XXX.XX deg
	OMICRON	XXX.XX deg
79	P20 rotation rate	X.XXXX deg/s
	P20 deadband	XXX.XX deg
80 *	Time from ignition/cutoff	XX b XX min/s
	Velocity to be gained	XXXXX. ft/s
	Delta V (accumulated)	XXXXX. ft/s
81	Delta VX (LV)	XXXX.X ft/s
	Delta VY (LV)	XXXX.X ft/s
	Delta VZ (LV)	XXXX.X ft/s
82	Delta VX (LV)	XXXX.X ft/s
	Delta VY (LV)	XXXX.X ft/s
	Delta VZ (LV)	XXXX.X ft/s
83	Delta VX (body)	XXXX.X ft/s
	Delta VY (body)	XXXX.X ft/s
	Delta VZ (body)	XXXX.X ft/s
84	Delta VX (LV of other vehicle)	XXXX.X ft/s
	Delta VY (LV of other vehicle)	XXXX.X ft/s
	Delta VZ (LV of other vehicle)	XXXX.X ft/s
85	VGX (body)	XXXX.X ft/s
	VGY (body)	XXXX.X ft/s
	VGZ (body)	XXXX.X ft/s
86	Delta VX (LV)	XXXXX. ft/s
	Delta VY (LV)	XXXXX. ft/s
	Delta VZ (LV)	XXXXX. ft/s
87	Mark data	XXX.XX deg
	Shaft angle	XX.XXX deg
	Trunnion angle	
88	Celestial body unit vector	X .XXXXX
		Y .XXXXX
		Z .XXXXX

*Display cannot be changed via data load (that is, V25NXXE, and so forth)

LIST OF NOUNS USED IN PROGRAM COLOSSUS

89	Landmark latitude		XX.XXX deg (+ north)
	Landmark longitude/2		XX.XXX deg (+ east)
	Landmark altitude		XXX.XX nmi
90	Rendezvous out of plane parameters		
	Y (Active)		XXX.XX nmi
	YDOT (Active)		XXXX.X ft/s
	YDOT (Passive)		XXXX.X ft/s
91	Present optics angles		
	Shaft		XXX.XX deg
	Trunnion		XX.XXX deg
92	New optics angles		
	Shaft		XXX.XX deg
	Trunnion		XX.XXX deg
93	Delta gyro angles	X	XX.XXX deg
		Y	XX.XXX deg
		Z	XX.XXX deg
94	Alternate LOS		
	Shaft angle		XXX.XX deg
	Trunnion angle		XX.XXX deg
95	Time from ignition (cutoff)		XXbXX min/s
	VG (P15)		XXXXX. ft/s
	VI (P15)		XXXXX. ft/s
96	Y (CSM)		XXX.XX nmi
	YDOT (CSM)		XXXX.X ft/s
	YDOT (LM)		XXXX.X ft/s
97	System test inputs		XXXXX.
			XXXXX.
			XXXXX.
98	System test results and input		XXXXX.
			.XXXXX
			XXXXX.
99	RMS in position		XXXXX. ft
	RMS in velocity		XXXX.X ft/s
	RMS option code		XXXXX.

LIST OF ALARM CODES USED WITH V05 N09 FOR PROGRAM COLOSSUS

CODE	PURPOSE	SET BY
00110	No mark since last mark reject	SXTMARK
00113	No inbits (Channel 16)	SXTMARK
00114	Mark made but not desired	SXTMARK
00115	Optics torque request with switch not at CMC	Extended verb optics CDU
00116	Optics switch altered before 15-second ZERO time elapsed	T4RUPT
00117	Optics torque request with optics not available	Extended verb optics CDU
00120	Optics torque request with optics not ZEROED	T4RUPT
00121	Optics CDU's no good at time of mark	SXTMARK
00205	Bad PIPA reading	SERVICER
00206	Zero encode not allowed with coarse align + gimbal lock	IMU mode switch
00207	ISS turn-on request not present for 90 seconds	T4RUPT
00210	IMU not operating	IMU mode switch, IMU-2 R02, P51
00211	Coarse align error-drive > 2 degrees	IMU mode switch
00212	PIPA fail but PIPA is not being used	IMU mode switch, T4RUPT
00213	IMU not operating with turn-on request	T4RUPT
00214	Program using IMU when turned off	T4RUPT
00217	Bad return from Stall routines	CURTAINS
00220	IMU not aligned (no REFSMMAT)	R02, P51
00401	Desired gimbal angles yield Gimbal Lock	Fine Align, IMU-2
00402	Second MINKEY pulse torque must be done	P52
00404	* Target out of view (trunnion angle >90 degrees)	R52
00405	* Two stars not available	P52, P54
00406	Rendezvous navigation not operating	R21, R23
00421	W-Matrix overflow	INTEGRV
00600	* Imaginary roots on first interation	P32, P72
00601	* Perigee altitude after CSI < 85 nmi earth orbit, 35,000 feet moon orbit	P32, P72
00602	* Perigee altitude after CDH < 85 nmi earth orbit, 35,000 feet moon orbit	P32, P72
00603	* CSI to CDH time < 10 minutes	P32, P33, P72, P73
00604	* CDH to TPI time < 10 minutes	P32, P72
00605	* Number of iterations exceeds loop maximum	P32, P72, P37
00606	* DV exceeds maximum	P32, P72
00611	* No TIG for given elevation angle	P34, P74
00612	* State vector in wrong sphere of influence	P37
00613	* Reentry angle out of limits	P37
00777	PIPA fail caused ISS warning	T4RUPT
01102	AGC self-test error	SELF-CHECK
01105	Downlink too fast	T4RUPT
01106	Uplink too fast	T4RUPT
01107	Phase table failure; assume erasable memory is destroyed	RESTART
01301	ARCSIN-ARCCOS argument too large	INTERPRETER
01407	VG increasing	S40.8
01426	** IMU unsatisfactory	P61, P62
01427	** IMU reversed	P61, P62
01520	V37 request not permitted at this time	V37
01600	Overflow in Drift Test	Optical Prealignment Calibration
01601	Bad IMU torque	Optical Prealignment Calibration
01703	Insufficient time for integration, TIG was slipped	R41

LIST OF ALARM CODES USED WITH V05 N09 FOR PROGRAM COLOSSUS

CODE	PURPOSE	SET BY
03777	ICDU fail caused the ISS warning	T4RUPT
04777	ICDU, PIPA fails caused the ISS warning	T4RUPT
07777	IMU fail caused the ISS warning	T4RUPT
10777	IMU, PIPA fails caused the ISS warning	T4RUPT
13777	IMU, ICDU fails caused the ISS warning	T4RUPT
14777	IMU, ICDU, PIPA fails caused the ISS warning	T4RUPT
20430	Integration abort due to subsurface state vector	All calls to integration
20607	No solution from Time-Theta or Time-Radius	TIMETHET, TIMERAD
20610	Lambda less than unity	P37
21204	Negative or zero WAITLIST call	WAITLIST
21206	Second job attempts to go to sleep via Keyboard and Display program	PINBALL
21210	Two programs using device at same time	IMU Mode Switch
21302	SQRT called with negative argument	INTERPRETER
21501	Keyboard and Display alarm during internal use (NVSUB)	PINBALL
21502	Illegal flashing display	GOPLAY
21521	P01 illegally selected	P01
31104	Delay routine busy	EXECUTIVE
31201	Executive overflow—no VAC areas available	EXECUTIVE
31202	Executive overflow—no core sets available	EXECUTIVE
31203	WAITLIST overflow—too many tasks	WAITLIST
31211	Illegal interrupt of Extended Verb	SXTMARK, P23

2XXXX—Indicates a go-to-routine 00 type abort.
3XXXX—Indicates a bailout type abort.

Note: For V05 N09 Displays:
R1—XXXXX (first alarm to occur after last reset).
R2—XXXXX (second alarm to occur after last reset).
R3—XXXXX (most recent alarm).
Depressing the RSET key on the DSKY will set R1 and R2 to zero, but not affect R3.

*This alarm is displayed without the astronaut having to key in V05 N09E. An astronaut DSKY response is required by this alarm.

**This alarm is displayed without the astronaut having to key in V05 N09E. No DSKY response is required by this alarm.

LIST OF OPTION CODES USED WITH V04 N06/N12 FOR PROGRAM COLOSSUS

(The specified option codes will be displayed in R1 in conjunction with Flashing V04 N06/N12 to request the astronaut to load into R2 the option he desires.)

CODE	PURPOSE	INPUT FOR R2	PROGRAMS
00001	Specify IMU orientation	1 = preferred, 2 = nominal, 3 = REFSMMAT, 4 = landing site	P50's
00002	Specify vehicle	1 = this vehicle, 2 = other vehicle	P21, R30
00003	Specify tracking attitude	1 = preferred, 2 = +X-axis	R63
00004	Specify FULTKFLAG setting	0 = Full, VHF and optics 1 = Partial, VHF or optics	P20
00007	Specify propulsion system	1 = SPS, 2 = RCS	P37
00024	Specify P20 mode	0 = Rendezvous, (Vecpoint) 1 = Celestial body, (Vecpoint) 2 = Rotate 4 = Rendezvous, (3-axis) 5 = Celestial body, (3-axis)	P20

LIST OF CHECKLIST REFERENCE CODES USED WITH V50 N25 FOR PROGRAM COLOSSUS

CODE	ACTION TO BE EFFECTED
00013	Perform coarse alignment
00014	Key in fine alignment option
00015	Perform celestial body acquisition
00016	Key in Terminate Mark sequence
00017	Perform MINKEY rendezvous sequence
00020	Perform MINKEY PC pulse torquing
00041	Switch CM/SM separation to UP
00062	Key in AGC power down
00202	Perform GNCS automatic maneuver
00204	Perform SPS gimbal trim

NOTES: Switch—denotes change position of a console switch
Perform—denotes start or end of a task
Key In—denotes key-in of data through the DSKY

FLAGWORD BIT ASSIGNMENTS (ALPHABETICAL) FOR COLOSSUS

ADVTRK	FW8	B10
AMOONFLG	FW0	B2
APSESW	FW8	B5
ASTNFLAG*	FW7	B12
ATTCHFLG*	FW7	B2
AUTOSEQ	FW10	B7
AVEGFLAG	FW1	B1
AVEMIDSW	FW9	B1
AVFLAG	FW2	B5
AZIMFLAG	FW11	B8
BURNFLAG	FW10	B10
CALCMAN2	FW2	B2
CMDAPARM*	FW6	B12
CMOONFLG	FW8	B12
CM/DSTBY	FW6	B2
COGAFLAG	FW8	B4
COMPUTER	FW5	B8
CSISFLAG	FW11	B6
CULTFLAG	FW3	B7
CYC61FLG	FW0	B4
D6OR9FLG	FW3	B2
DAPBIT1	FW6	B15
DAPBIT2	FW6	B14
DIMOFLAG	FW3	B1
DMENFLG	FW5	B9
DRIFTFLG	FW2	B15
DSKYFLAG*	FW5	B15
EGSW	FW6	B8
ENG2FLAG	FW1	B11
ENGONBIT	FW5	B7
ENTRYDSP	FW6	B13
ERADFLAG	FW1	B13
ETPIFLAG	FW2	B7
FINALFLG	FW2	B6
FIRSTFLG	FW2	B7
FREEFLAG	FW0	B3
FULTKFLG	FW10	B2
F2RTE	FW0	B5
GAMDIFSW*	FW6	B11
GLOKFAIL	FW3	B14
GONEBY	FW7	B8
GONEPAST	FW6	B10
GRRBKFLG	FW5	B5
GUESSW	FW1	B2
GYMOIFSW*	FW6	B1
HAFLAG	FW11	B7
HDSUPFLG	FW10	B11
HIND	FW6	B6
IDLEFAIL	FW1	B6
IGNFLAG*	FW7	B13
IMPULSW	FW2	B9
IMUSE	FW0	B8
INCORFLG	FW5	B11
INFINFLG	FW8	B7
INRLSW	FW6	B5
INTFLAG	FW10	B14
INTYPFLG	FW3	B4
ITSWICH	FW7	B14
JSWITCH	FW0	B14
KNOWNFLG	FW6	B8
LATSW	FW6	B4
LMOONFLG	FW8	B11
LUNAFLAG	FW3	B12
MANEUFLG	FW10	B5
MARKFLG	FW1	B4
MAXDBFLG	FW9	B12
MGLVFLAG	FW5	B2
MID1FLAG	FW9	B3
MIDAVFLG	FW9	B2
MIDFLAG	FW0	B13
MKOVFLAG*	FW4	B3
MOONFLAG	FW0	B12
MRKIDFLG*	FW4	B15
MRKNVFLG	FW4	B9
MRUPTFLG*	FW4	B5
MWAITFLG*	FW4	B11
NEEDLFLG	FW0	B9
NEWIFLG	FW8	B13
NEWLMFLG	FW8	B14
NEWTFLAG	FW5	B10
NJETSFLG	FW1	B15
NODOFLAG	FW2	B1
NODOP01	FW1	B12
NORFHOR	FW0	B11
NORMSW	FW7	B10
NOSWITCH	FW6	B7
NRMIDFLG*	FW4	B13
NRMNVFLG	FW4	B8
NRUPTFLG*	FW4	B4
NWAITFLG*	FW4	B10
N22ORN17	FW9	B6
ORBWFLAG	FW3	B6
ORDERSW	FW8	B6
PCFLAG	FW10	B1
PCMANFLG	FW10	B15
PDSPFLAG	FW4	B12
PFRATFLG	FW2	B4
PINBRFLG	FW4	B6
PRECIFLG	FW3	B8
PRIODFLG*	FW4	B14
PRONVFLG	FW4	B7
PTV93FLG	FW10	B4
P00FLAG	FW3	B9
P21FLAG	FW2	B12
P22MKFLG	FW3	B11
P24FLAG	FW9	B14
P24MKFLG	FW2	B3
P29FLAG	FW0	B1
P35FLAG	FW10	B8
QUITFLAG	FW9	B5
RANGFLAG	FW10	B9
REFSMFLG	FW3	B13
REINTFLG	FW10	B7
REJCTFLG	FW10	B12
RELVELSW	FW6	B9
RENDWFLG	FW5	B1
RETROFLG	FW5	B14
RNDVZFLG	FW0	B7
RPOFLAG	FW8	B15
RVSW	FW7	B9
R21MARK	FW2	B14
R22CAFLG*	FW9	B7
R31FLAG	FW9	B4
R53FLAG	FW0	B6
R67FLAG	FW8	B2
SAVECFLG	FW9	B10
SKIPVHF	FW2	B10
SLOPESW	FW1	B3
SLOWFLG	FW5	B13
SOLNSW	FW5	B3
SOURCFLG	FW9	B8
STATEFLG	FW3	B5
STEERSW	FW2	B11
STIKFLAG	FW1	B14

*These switches are never called by name.

FLAGWORD BIT ASSIGNMENTS (ALPHABETICAL) FOR COLOSSUS

STRULLSW	FW6	B13
SURFFLAG	FW8	B8
SWTOVER*	FW9	B15
S32.1F1	FW11	B15
S32.1F2	FW11	B14
S32.1F3A	FW11	B13
S32.1F3B	FW11	B12
TARG1FLG	FW1	B10
TARG2FLG	FW1	B9
TERMIFLG	FW7	B15
TFFSW	FW7	B1
TIMRFLAG	FW7	B11
TPIMNFLG	FW10	B3
TRACKFLG	FW1	B5
UTFLAG	FW8	B9
UPDATFLG	FW1	B7
UPLOCKFL*	FW7	B4
VEHUPFLG	FW1	B8
VERIFLAG*	FW7	B3
VFLAG	FW3	B10
VHFRFLAG	FW9	B9
VINTFLAG	FW3	B3
VNFLAG	FW4	B2
V37FLAG	FW7	B6
V50N18FL	FW3	B15
V59FLAG	FW5	B12
V82EMFLG	FW9	B13
V94FLAG	FW9	B11
V96ONFLG	FW8	B3
XDELVFLG	FW2	B8
XDSPFLAG*	FW4	B1
ZMEASURE	FW0	B10
.05GSW	FW6	B3
22DSPFLG	FW2	B13
360SW	FW8	B1
3AXISFLG	FW5	B6

*These switches are never called by name.

FLAGWORD BIT ASSIGNMENTS FOR COLOSSUS

(FLAGWORD 0) E Address 74

Bit	Name	1	0
1	P29FLAG	First pass through P29.	Subsequent pass through P29.
2	AMOONFLG	State vector in lunar sphere at MIDTOAVE.	State vector in earth sphere at MIDTOAVE.
3	FREEFLAG	(Temporary flag used in many routines.)	
4	CYC61FLG	KALCMANU computes maneuver time.	KALCMANU executes maneuver.
5	F2RTE	In time critical mode.	Not in time critical mode.
6	R53FLAG	V51 initiated.	V51 not initiated.
7	RNDVZFLG	P20 rendezvous option running.	P20 rendezvous option not running.
8	IMUSE	IMU in use.	IMU not in use.
9	NEEDLFLG	Total attitude error displayed.	A/P following error displayed.
10	ZMEASURE	Measurement planet and primary planet different.	Measurement planet and primary planet same.
11	NORFHOR	Far horizon.	Near horizon.
12	MOONFLAG	Moon is sphere of influence.	Earth is sphere of influence.
13	MIDFLAG	Integration with solar perturbations.	Integration without solar perturbations.
14	JSWITCH	Integration of W matrix.	Integration of state vector.
15	Not Used		

(FLAGWORD 1) E Address 75

Bit	Name	1	0
1	AVEGFLAG	AVERAGEG (SERVICER) to continue.	AVERAGEG (SERVICER) to cease.
2	GUESSW	No starting value for iteration exists.	Starting value for iteration exists.
3	SLOPESW	Iterate with bias method in iterator.	Iterate with Regula Falsi method in iterator.
4	MARKFLG	Mark accepted. Mark reject is ok.	No mark accepted.
5	TRACKFLG	Tracking allowed.	Tracking not allowed.
6	IDLEFAIL	Inhibit R40.	Enable R40 (engine fail).
7	UPDATFLG	Updating by marks allowed.	Updating by marks not allowed.
8	VEHUPFLG	CSM state vector being updated.	LM state vector being updated.
9	TARG2FLG	Sighting landmark.	Sighting star.
10	TARG1FLG	Sighting LM.	Not sighting LM.
11	ENG2FLAG	RCS burn.	SPS burn.
12	NODOP01	P01 not allowed.	P01 allowed.

FLAGWORD BIT ASSIGNMENTS FOR COLOSSUS

(FLAGWORD 1) (Continued)

Bit	Name	1	0
13	ERADFLAG	EARTH—compute Fischer ellipsoid radius. MOON—use fixed radius.	EARTH—use fixed radius. MOON—use RLS for lunar radius.
14	STIKFLAG	RHC control or MGA $>75^{\circ}$ and P20 track inhibited.	AGC control and MGA $<75^{\circ}$
15	NJETSFLG	Two-jet RCS burn.	Four-jet RCS burn.

(FLAGWORD 2) E Address 76

Bit	Name	1	0
1	NODOFLAG	V37 not permitted.	V37 permitted.
2	CALCMAN2	Perform maneuver starting procedure	Bypass starting procedure.
3	P24MKFLG	New mark from SXT mark.	No marking done.
4	PFRATFLG	Preferred a titude computed.	Preferred attitude not computed.
5	AVFLAG	LM is ac ive vehicle.	CSM is active vehicle.
6	FINALFLG	Last pass through rendezvous program computations.	Interim pass through rendezvous program computations.
7	FIRSTFLG	First pass through S40.9.	Succeeding pass through S40.9.
	ETPIFLAG	Elevation angle supplied for P34/74.	TPI time supplied for P34/P74.
8	XDELVFLG	External Delta V VG computation.	Lambert (AIMPOINT) VG computation.
9	IMPULSW	Minimum impulse burn (cutoff time specified).	Steering burn (no cutoff time yet available).
10	SKIPVHF	Disregard radar read becasue of sof ware or hardware RESTART.	Radar read to proceed normally.
11	STEERSW	Steering to be done (P40). Calculate time to SIVB ignition (P15).	Steering omitted (P40). Calculate time to SIVB cutoff (P15).
12	P21FLAG	Succeeding pass through P21. use base vector for calculation.	First pass through P21. calculate base vector.

FLAGWORD BIT ASSIGNMENTS FOR COLOSSUS

(FLAGWORD 2) (continued)

Bit	Name	1	0
13	22DPSFLG	Display DR, DV.	Do not display DR, DV.
14	R21MARK	Rendezvous optics marking active.	Rendezvous optics marking not active.
15	DRIFTFLG	T3RUPT calls gyro compensation.	T3RUPT does no gyro compensation.

(FLAGWORD 3) E Address 77

Bit	Name	1	0
1	DIM0FLAG	W matrix is to be used.	W matrix is not to be used.
2	D6OR9FLG	Dimension of W is 9 for integration.	Dimension of W is 6 for integration.
3	VINTFLAG	CSM state vector being integrated.	LM state vector being integrated.
4	INTYPFLG	Conic integration.	Encke integration.
5	STATEFLG	Permanent state vector being updated.	Permanent state vector not being updated.
6	ORBWFLAG	W matrix valid for orbital navigation.	W matrix invalid for orbital integration.
7	CULTFLAG	Star occulted.	Star not occulted.
8	PRECIFLG	CSMPREC, LEMPREC, or INTEGRVS called.	INTGRV called.
9	P00FLAG	Inhibit backwards integration.	Allow backwards integration.
10	VFLAG	Less than two stars in the field of view.	Two stars in the field of view.
11	P22MKFLG	P22/P24 downlinked mark data was just taken.	P22/P24 downlinked mark data not just taken.
12	LUNAFLAG	Lunar latitude-longitude.	Earth latitude-longitude.
13	REFSMFLG	REFSMMAT good.	REFSMMAT no good.
14	GLOKFAIL	GIMBAL LOCK has occurred.	Not in GIMBAL LOCK.
15	V50N18FL	Enable R60 attitude maneuver.	Inhibit R60 attitude maneuver.

FLAGWORD BIT ASSIGNMENTS FOR COLOSSUS

(FLAGWORD 4) E Address 100

Bit	Name	1	0
1	XDSPFLAG*	Mark display not to be interrupted.	No special mark information.
2	VNFLAG	VN Flash display	GOFLASH display
3	MKOVFLAG*	Mark display over normal display.	No mark display over normal display.
4	NRUPTFLG*	Normal display interrupted by priority or mark display.	Normal display not interrupted by priority or mark display.
5	MRUPTFLG*	Mark display interrupted by priority display.	Mark display not interrupted by priority display.
6	PINBRFLG	Astronaut has interferred with existing display.	Astronaut has not interferred with existing display.
7	PRONVFLG	Astronaut using keyboard when priority display initiated.	Astronaut not using keyboard when priority display initiated.
8	NRMNVFLG	Astronaut using keyboard when normal display initiated.	Astronaut not using keyboard when normal display initiated.
9	MRKNVFLG	Astronaut using keyboard when mark display initiated.	Astronaut not using keyboard when mark display initiated.
10	NWAITFLG*	Higher priority display operating when normal display initiated.	No higher priority display operating when normal display initiated.
11	MWAITFLG*	Higher priority display operating when mark display initiated.	No higher priority display operating when mark display initiated.
12	PDSPFLAG	Cannot interrupt priority display.	
13	NRMIDFLG*	Normal display in ENDIDLE.	No normal display in ENDIDLE.
14	PRIODFLG*	Priority display in ENDIDLE.	No priority display in ENDIDLE.
15	MRKIDFLG*	Mark display in ENDIDLE.	No mark display in ENDIDLE.

(FLAGWORD 5) E Address 101

Bit	Name	1	0
1	RENDWFLG	W matrix valid for rendezvous navigation	W matrix invalid for rendezvous navigation.
2	Not Assigned		
3	SOLNSW	Lambert does not converge, or time-radius nearly circular.	Lambert converges or time-radius non circular.
4	Not Assigned		
5	GRRBKFLG	Backup GRR received.	Backup GRR not received.

*These switches are never called by name.

FLAGWORD BIT ASSIGNMENTS FOR COLOSSUS

(FLAGWORD 5) (continued)

Bit	Name	1	0
6	3AXISFLG	Maneuver specified by three axes.	Maneuver specified by one axis.
7	ENGONBIT	Engine turned on.	Engine turned off.
8	COMPUTER	Not used in program.	Not used in program.
9	DMENFLG	Dimension of W is 9 for incorporation.	Dimension of W is 6 for incorporation.
10	NEWTFLAG	New longitude iteration. Skip display.	Display normal.
11	INCORFLG	First incorporation.	Second incorporation.
12	V59FLAG	Calibrating for P23.	Normal marking for P23.
13	SLOWFLG	P37 transearth coast slowdown is desired.	Slowdown is not desired
14	RETROFLG	P37 premaneuver orbit is retrograde.	Orbit is not retrograde.
15	DSKYFLAG*	Displays sent to DSKY.	No displays to DSKY.

(FLAGWORD 6) E Address 102

Bit	Name	1	0
1	GYMDIFSW*	CDU differences and body rates computed.	CDU differences and body rates not computed.
2	CM/DSTBY	ENTRY DAP activated.	ENTRY DAP not activated.
3	.05GSW	Drag over 0.05 g	Drag less than 0.05 g.
4	LATSW	Downlift not inhibited.	Downlift inhibited.
5	INRLSW	Initial roll V(LV) attitude not held.	Initial roll V(LV) attitude held.
6	HIND	Iterating of HUNTEST calculation to be done after range prediction.	Iterating of HUNTEST calculations to be omitted after range prediction.
7	NOSWITCH	Lateral roll maneuver inhibited in ENTRY.	Lateral roll maneuver permitted in ENTRY.
8	KNOWNFLG	Landmark known.	Landmark unknown.
	EGSW	In final entry phase.	Not in final entry phase.
9	RELVELSW	Targeting uses earth-relative velocity.	Targeting uses inertial velocity.

*These switches are never called by name.

FLAGWORD BIT ASSIGNMENTS FOR COLOSSUS

(FLAGWORD 6) (continued)

Bit	Name	1	0
10	GONEPAST	Lateral control calculations to be omitted.	Lateral control calculations to be done.
11	GAMDIFSW*	Calculate GAMDOT.	GAMDOT not to be calculated.
12	CMDAPARM*	Allow ENTRY firings and calculations.	Inhibit ENTRY firings and control functions.
13	ENTRYDSP	Do ENTRY display via ENTRYVN.	Omit ENTRY display.
	STRULLSW	Do STEERULL.	Do ULAGEOFF only.
14	DAPBIT2		
15	DAPBIT1		DAP selection indicator.

B14	0	1	0	1
B15	0	0	1	1
A/P	None	RCS	TVC	Saturn

(FLAGWORD 7) E Address 103

Bit	Name	1	0
1	TFFSW	Calculate TPERIGEE.	Calculate TFF.
2	ATTCHFLG*	LM, CM attached.	LM, CM not attached.
3	VERIFLAG*	Changed when V33E occurs at end of P27.	
4	UPLOCKFL*	K-$\bar{K}$-K fail.	No K-$\bar{K}$-K fail.
5	Not Assigned		
6	V37FLAG	AVERAGEG (SERVICER) running.	AVERAGEG (SERVICER) off.
7	Not Assigned		
8	GONEBY	Passed target.	Approaching target.
9	RVSW	Do not compute final state vector in time-theta.	Compute final state vector in time-theta.
10	NORMSW	Unit normal input to Lambert.	Lambert computes its own unit normal.
11	TIMRFLAG	CLOKTASK operating.	CLOKTASK inoperative.
12	ASTNFLAG*	Astronaut has OKed ignition.	Astronaut has not OKed ignition.
13	IGNFLAG*	TIG has arrived.	TIG has not arrived.
14	ITSWICH	Accept next Lambert TPI search solution.	Test Lambert answer against limits.
15	TERMIFLG	Terminate R52.	Do not terminate R52.

*These switches are never called by name.

FLAGWORD BIT ASSIGNMENTS FOR COLOSSUS

(FLAGWORD 8) E Address 104

Bit	Name	1	0
1	360SW	Transfer angle near 360 degrees.	Transfer angle not near 360 degrees.
2	R67FLAG	R67 rotation active.	R67 rotation inactive.
3	V96ONFLG	P00 integration has been inhibited by V96	P00 integration is proceeding regularly.
4	COGAFLAG	No conic solution, too close to rectilinear (COGA overflows).	Conic solution exists. (COGA does not overflow.)
5	APSESW	RDESIRED outside of PERICENTER-APOCENTER range in time-radius.	RDESIRED inside of PERICENTER-APOCENTER range in time-radius.
6	ORDERSW	Iterator uses second order minimum mode	Iterator uses first order standard mode.
7	INFINFLG	No conic solution (closure through infinity required).	Conic solution exists.
8	SURFFLAG	LM on lunar surface.	LM not on lunar surface.
9	UTFLAG	P20 option 1,2, or 5 selected.	
10	ADVTRK	Advance ground track sighting wanted.	No advanced ground track.
11	LMOONFLG	Permanent LM state vector in lunar sphere.	Permanent LM state vector in earth sphere.
12	CMOONFLG	Permanent CSM state vector in lunar sphere.	Permanent CSM state vector in earth sphere.
13	NEWIFLG	First pass through integration.	Succeeding iteration of integration.
14	NEWLMFLG	Delay rate computation after new landmark update.	Delay completed.
15	RPQFLAG	RPQ not computed. (RPQ = vector between secondary body and primary body.)	RPQ computed.

(FLAGWORD 9) E Address 105

Bit	Name	1	0
1	AVEMIDSW	AVETOMID calling for W matrix integration. Do not overwrite RN, VN, PIPTIME.	No AVETOMID W matrix integration. Allow setup of RN, VN, PIPTIME.
2	MIDAVFLG	Integration entered from one of MIDTOAV portals.	Integration was not entered via MIDTOAV.
3	MID1FLAG	Integrate to TDEC.	Integrate to the then-present time.
4	R31FLAG	R31 selected (V83).	R34 selected (V85).
5	QUITFLAG	Terminate and exit from integration.	Continue integration.
6	N22ORN17	Compute total attitude errors with respect to N22 (V62).	Compute total attitude errors with respect to N17 (V63).

FLAGWORD BIT ASSIGNMENTS FOR COLOSSUS

(FLAGWORD 9) (continued)

Bit	Name	1	0
7	R22CAFLG*	R22 is processing an optics mark.	R22 is not processing an optics mark.
8	SORUCFLG	Source of input data is from VHF radar.	Source of input data is from optics mark.
9	VHFRFLAG	Allow R22 to accept range data.	Stop acceptance of range data.
10	SAVECFLG	P23 display and data storage after mark is done.	P23 display and data storage before mark is done.
11	V94FLAG	V94 allowed during P23.	V94 not allowed.
12	MAXDBFLG	Maximum A/P deadband selected.	Minimum A/P deadband selected.
13	V82EMFLG	Moon vicinity.	Earth vicinity.
14	P24FLAG	P24 operating.	P24 not operating.
15	SWTOVER	Switchover has occurred.	No switchover yet

*These switches are never called by name.

(FLAGWORD 10) E Address 106

Bit	Name	1	0
1	PCFLAG	Plane change maneuver being targeted.	Not plane change targeting.
2	FULTKFLG	Optics or VHF marks being taken.	Optics and VHF marks being taken.
3	TPIMNFLG	TPI targeting complete.	TPI targeting not complete.
4	PTV93FLG	W matrix to be initialized after maneuver.	W matrix initialized
5	MANEUFLG	No mark incorporation since targeting completed.	Mark incorporated.
6	Not Assigned		
7	AUTOSEQ	MINKEY auto-rendezvous.	Manual rendezvous.
8	P35FLAG	MCC targeting completed.	MCC targeting not completed.
9	RANGFLAG	Range<327.67 nmi.	Range >327.67 nmi.
10	BURNFLAG	CSM performed burn.	LM performed burn.
11	HDSUPFLG	Heads-up tracking attitude.	Heads-down tracking attitude.
12	REJCTFLG	Reject mark data being processed by R22.	No mark rejected.
13	REINTFLG	Restartable integration in process.	No restartable integration in process.
14	INTFLAG	Integration in process.	Integration not in process
15	PCMANFLG	Maneuver is post plane change or P79.	Not post plane change or P79 maneuver.

FLAGWORD BIT ASSIGNMENTS FOR COLOSSUS

(FLAGWORD 11) E Address 107

Bit	Name	1	0
1-5	Not Assigned		
6	CSISFLAG	Multiple CSI targeting.	Not multiple CSI.
7	HAFLAG	Height adjustment targeting.	Not height adjustment maneuver.
8	AZIMFLAG	Three-axis tracking maneuver.	Vecpoint tracking maneuver.
9-11	Not Assigned		
12 13	S32.1F38 S32.1F3A	(Bits 12 and 13 function as an ordered pair (13, 12) indicating the possible occurrence of two Newton iterations for S32.1: (0, 0) – First pass of second Newton iteration, (0, 1) – First Newton iteration being done, (1, 0) – Remainder of second Newton iteration, (1, 1) – 50 ft/s stage of second Newton iteration.)	
14	S32.1F2	First pass of Newton iteration.	Reiteration of Newton.
15	S32.1F1	Delta V at CSI Time 1 exceeds maximum.	Delta V at CSI Time 1 less than maximum.

FLAGWORD BIT ASSIGNMENTS FOR COLOSSUS

IMODES30, a flag whose individual bits are used to control the monitoring of IMU functions associated with Channel 30 (and in a few cases Channel 33).

Bit	Meaning
15	Last sampled value of Channel 30, Bit 15 (0 if IMU temperature within limits).
14	Last sampled value of Channel 30, Bit 14 (0 if ISS has been turned on or commanded to be turned on).
13	Last sampled value of Channel 30, Bit 13 (0 if an IMU fail indication has been produced).
12	Last sampled value of Channel 30, Bit 12 (0 if an IMU CDU fail indication has been produced).
11	Last sampled value of Channel 30, Bit 11 (0 if an IMU cage command has been produced by crew).
10	Last sampled value of Channel 33, Bit 13 (0 if a PIPA fail indication has been produced), having the same value as Bit 13 of IMODES33.
9	Last sampled value of Channel 30, Bit 9 (0 if IMU has been turned on and operating with no malfunctions).
8	Bit used to control the IMU turn-on sequencing.
7	Bit used to control the IMU turn-on sequencing.
6	Bit is set to 1 to indicate that IMU initialization is being carried out. No Verb 37 inputs will be processed while bit is equal to 1 and alarm 01520_8 is generated.
5	Bit is set to 1 to inhibit the generation of program alarm 0212_8 if a PIPA fail signal (Bit 13 of Channel 33) is produced.
4	Bit is set to 1 to inhibit generation of an ISS warning based on receipt of an IMU fail signal.
3	Bit is set to 1 to inhibit generation of an ISS warning based on receipt of an IMU CDU fail signal.
2	Bit is set to 1 to indicate failure of the turn-on delay sequence for IMU turn-on (alarm 0207_8 is also generated).
1	Bit is set to 1 to inhibit generation of an ISS warning based on receipt of a PIPA fail signal (Bit 13 of Channel 33).

FLAGWORD BIT ASSIGNMENTS FOR COLOSSUS

IMODES33, a flag whose individual bits are used to control the monitoring of functions associated with Channel 33 (and other items).

Bit	Meaning
15	Not assigned.
14	Last sampled value of Channel 32, Bit 14 (0 if a Proceed command is given using the PRO button).
13	Last sampled value of Channel 33, Bit 13 (0 if a PIPA fail has been produced).
12	Last sampled value of Channel 33, Bit 12 (0 if a telemetry end pulse has been rejected because the downlink rate is too fast).
11	Last sampled value of Channel 33, Bit 11 (0 if an uplink bit has been rejected because the uplink rate is too fast).
10-7	Not assigned.
6	Bit is set to 1 to indicate that IMU use for vehicle attitude information should not be attempted.
5	Bit is set to 1 in IMU Zeroing routine external to T4RUPT while zeroing is taking place (for an interval of about 8.22 seconds).
4-2	Not assigned.
1	Bit is set to 1 when a Verb 35 ("lamp test") is received, and reset to 0 about 5 seconds later.

FLAGWORD BIT ASSIGNMENTS FOR COLOSSUS

OPTMODES, a flag whose individual bits are used to control the performance of optics functions within the T4RUPT package.

Bit	Meaning
15-11	Not Assigned
10	Bit is set to 1 to indicate that zeroing of optics has been completed since the last FRESH START or RESTART (both of which set the bit to 0). If an attempt is made to drive the optics and this bit is found to be zero, alarm 0120_8 is generated (but computation proceeds).
9	Not assigned.
8	Not assigned.
7	Last sampled value of Channel 30, Bit 7 (0 if an optics CDU fail indication has been generated by the optics CDU hardware). If Bit 2 of this word is 0, a Tracker alarm (Bit 8 of DSPTAB + 11) is generated if this bit has a 1 to 0 transition. Bit is set to 1 by a FRESH START or RESTART.
6	Not assigned.
5	Last sampled value of Channel 33, Bit 5 (0 if Optics Mode switch is set to CMC).
4	Last sampled value of Channel 33, Bit 4 (0 if Optics Zero switch set to Zero). If Bits $5\text{-}4 = 11_2$, the Optics Mode switch has been set to Manual.
3	Bit is set to 1 when the Optics Zero switch is changed to Zero to indicate that zeroing of the optics is in progress. If bit is 1, then a switch out of Zero Optics mode will cause alarm 0116_8 to be generated (if switched to Manual, a "grace period" of about 5.3 seconds is provided before the optics-zeroing time counter is reset, during which time a switchback to optics zeroing can be made). Bit remains 1 for about 16.2 seconds, and is then reset to 0 (at the same time that Bit 10 of this word is set to 1, and Bit 2 of this word is set to 0).
2	Bit is set to 1 to inhibit generation of Tracker alarm (Bit 8 of DSPTAB + 11) if Bit 7 of this word goes from 1 to 0. Bit is set and reset at the same time as Bit 3.
1	Not assigned.

FLAGWORD BIT ASSIGNMENTS FOR COLOSSUS

RCSFLAGS, a flag whose individual bits are used in monitoring the RCS DAP.

Bit	Meaning
15	Bit is set to 1 to indicate that a high rate (2 deg/s) automaneuver is in progress. Bit is reset to 0 to indicate that a high rate automaneuver is not in progress.
14	Bit is set to 1 if rate estimates are not good and a repeat of the rate filter initialization is required. Bit is reset to 0 if the G & N is in control and the IMU data is usable. Approximately 1 second after the bit is reset to 0 the rate filter initialization is complete.
13	Bit is set to 1 if the rate damping has not been completed on the roll axis. Bit is reset to 0 if the rate damping on the roll axis has been completed.
12	Bit is set to 1 if the rate damping has not been completed on the pitch axis. Bit is reset to 0 if the rate damping has been completed on the pitch axis.
11	Bit is set to 1 if the rate damping has not been completed on the yaw axis. Bit is reset to 0 if the rate damping has been completed on the yaw axis.
10,9	If either or both bits have been set to 1, there has been a change in the RHC roll command since the last DAP cycle. If both bits are reset to 0, it implies that no change in the RHC roll command has occurred since the last DAP cycle.
8,7	If either or both bits have been set to 1, there has been a change in RHC yaw command since the last DAP cycle. If both bits are reset to 0, it implies that no change in the RHC yaw command has occurred since the last DAP cycle.
6,5	If either or both bits have been set to 1, there has been a change in the RHC pitch command since the last DAP cycle. If both bits are reset to 0, it implies that no change in the RHC pitch command has occurred since the last DAP cycle.
4	Bit is set to 1 to indicate that the AK values should be updated. Bit is reset to 0 to indicate that the Needle Drive routine should be processed with the AK values which have been previously acquired.

3,2	If (Bit 3, Bit 2) = (1,1) or (1,0), it is necessary to follow the initialization path of the Needle Drive routine.
	
	If (Bit 3, Bit 2) = (0, 1), it is necessary to follow Pass 2 of the Needle Drive routine.
	
	If (Bit 3, Bit 2) = (0, 0), it is necessary to follow Pass 3 and greater paths of the Needle Drive routine.

1	Bit is set to 1 to indicate that the initial pass path in the T6 program should not be followed. Bit is reset to 0 if the T6 program should be initialized.

FLAGWORD BIT ASSIGNMENTS FOR COLOSSUS

C31FLWORD, a flag used to determine if the channel representations of the CMC Mode switch, SC CONTROL switch and OPTICS ZERO switch are to be used or if backup indicators are to be used. Octal representation is AXXBX where:

A VALUE

0 or 4	Bits 13, 14, 15 of Channel 31 are valid
1	CMC Control FREE
2	CMC Control HOLD
3	CMC Control AUTO
5	SCS Control FREE
6	SCS Control HOLD
7	SCS Control AUTO

B VALUE

0 or 4	Bits 4, 5 of Channel 33 are valid
1 or 5	Optics Mode CMC
2 or 6	Optics Mode ZERO
3 or 7	Optics Mode Manual

FLAGWORD BIT ASSIGNMENTS FOR COLOSSUS

DAPDATR1, a flagword for RCS-CSM DAP interface.

Bits	15-13	12-10	9-7	6-4	3-1
	CONFIG	XTAC	XTBD	DB	RATE

15-13 CONFIG: Configuration

0	No DAP or ENTRY DAP
1	CSM
2	CSM/LM
3	CSM/SIVB
6	CSM/LM Ascent Stage Only

12-10 XTAC: X-translation using Quads AC

0	No AC
1	Use AC

9-7 XTBD: X-translation using Quads BD

0	No BD
1	Use BD

6-4 DB: Deadband

0	± 0.5 degree
1	± 5.0 degrees

3-1 RATE: Response to RHC, automatic maneuvers

0	0.05 degree/second
1	0.2 degree/second
2	0.5 degree/second
3	2.0 degrees/second

DAPDATR2, a flagword for RCS-CSM DAP interface.

Bits	15-13	12-10	9-7	6-4	3-1
	AC-Roll	Quad A	Quad B	Quad C	Quad D

15-13 AC-Roll: Roll jet selection

0	Use BD Roll
1	Use AC Roll

12-10, 9-7, 6-4, 3-1 A, B, C, D Quad fails

0	Quad Failed
1	Quad OK

CHANNEL BIT ASSIGNMENTS (CM)

INPUT CHANNEL 3

Bit 1-14 Contains the HIGH ORDER SCALER: 23.3 hours = maximum capacity in increments of 5.12 seconds.

INPUT CHANNEL 4

Bits 1-14 Contains the LOW ORDER SCALER: 5.12 seconds = maximum capacity in increments of 1/3,200 second.

OUTPUT CHANNEL 5

BIT	JET DESIGNATION SM QUAD NO./CM RING NO.	SM COMMAND TRANS/ROT	CM COMMAND
1	C-3/1-3	+X/+P	+P
2	C-4/2-4	-X/-P	-P
3	A-3/2-3	-X/+P	+P
4	A-4/1-4	+X/-P	-P
5	D-3/2-5	+X/+Y_W	+Y_W
6	D-4/1-6	-X/-Y_W	-Y_W
7	B-3/1-5	-X/+Y_W	+Y_W
8	B-4/2-6	+X/-Y_W	-Y_W

OUTPUT CHANNEL 6

BIT	JET DESIGNATION SM QUAD NO./CM RING NO.	SM COMMAND TRANS/ROT	CM COMMAND
1	B-1/1-1	+Z/+R	+R
2	B-2/1-2	-Z/-R	-R
3	D-1/2-1	-Z/+R	+R
4	D-2/2-2	+Z/-R	-R
5	A-1	+Y/+R	
6	A-2	-Y/-R	
7	C-1	-Y/+R	
8	C-2	+Y/-R	

CHANNEL BIT ASSIGNMENTS (CM)

OUTPUT CHANNEL 11

BIT	
1	ISS Warning
2	Light Computer Activity Lamp
3	Light Uplink Activity Lamp
4	Light Temp Caution Lamp
5	Light Keyboard Release Lamp
6	Flash Verb and Noun Lamps
7	Light Operator Error Lamp
8	Spare
9	Test Connector Outbit
10	Caution Reset
11	Spare
12	Spare
13	Engine On/Off (1–On, 0–Off)
14	Spare
15	Spare

OUTPUT CHANNEL 12

1	Zero Optics CDU's
2	Enable Optics CDU Error Counters
3	Not Used
4	Coarse Align Enable
5	Zero IMU CDU's
6	Enable IMU CDU Error Counters
7	Spare
8	TVC Enable
9	Enable SIVB Takeover
10	Zero Optics
11	Disengage Optics DAC
12	Spare
13	SIVB Injection Sequence Start
14	SIVB Cutoff
15	ISS Turn-on Delay Complete

OUTPUT CHANNEL 13

1	Range Unit Select c
2	Range Unit Select b
3	Range Unit Select a
4	Range Unit Activity
5	Not Used
6	Block Inlink
7	Downlink Word Order Code Bit
8	Not Used
9	Spare
10	Test Alarms
11	Enable Standby
12	Reset Trap 31-A
13	Reset Trap 31-B
14	Reset Trap 32
15	Enable T6RUPT

NOTE:

Channel 13 Range Unit Selection: Bits 1 through 4 are assigned control functions for sampling of the VHF range link. These bits must contain 1001_8 in order to obtain control.

CHANNEL BIT ASSIGNMENTS (CM)

OUTPUT CHANNEL 14

BIT	
1	Not Used
2	Spare
3	Spare
4	Spare
5	Not Used
6	Gyro Enable
7	Gyro Select b
8	Gyro Select a
9	Gyro Sign (1 = minus)
10	Gyro Activity
11	Drive CDU S
12	Drive CDU T
13	Drive CDU Z
14	Drive CDU Y
15	Drive CDU X

Channel 14-Gyro Selection

a	b	Gyro
0	0	—
0	1	X
1	0	Y
1	1	Z

INPUT CHANNEL 15

BIT	
1	Key codes from Main DSKY
2	Key codes from Main DSKY
3	Key codes from Main DSKY
4	Key codes from Main DSKY
5	Key codes from Main DSKY
6	Spare
7	Spare
8	Spare
9	Spare
10	Spare
11	Spare
12	Spare
13	Spare
14	Spare
15	Spare

INPUT CHANNEL 16

BIT	
1	Key codes from Navigation DSKY
2	Key codes from Navigation DSKY
3	Key codes from Navigation DSKY
4	Key codes from Navigation DSKY
5	Key codes from Navigation DSKY
6	Mark button
7	Mark Reject button
8	Spare
9	Spare
10	Spare
11	Spare
12	Spare
13	Spare
14	Spare
15	Spare

CHANNEL BIT ASSIGNMENTS (CM)

INPUT CHANNEL 30

BIT	
1	Ullage Thrust Present
2	CM/SM Separate
3	SPS Ready
4	SI VB Separate, Abort
5	Liftoff
6	Guidance Reference Release
7	Optics CDU Fail
8	Spare
9	IMU Operate
10	S/C Control of Saturn
11	IMU Cage
12	IMU CDU Fail
13	IMU Fail
14	ISS Turn-On Request
15	Temperature in Limits

NOTE:
All of the input signals in Channel 30 are inverted; that is, a ZERO bit indicates that the discrete is ON.

INPUT CHANNEL 31

BIT	
1	+Pitch Manual Rotation
2	-Pitch Manual Rotation
3	+Yaw Manual Rotation
4	-Yaw Manual Rotation
5	+Roll Manual Rotation
6	-Roll Manual Rotation
7	+X Translation
8	-X Translation
9	+Y Translation
10	-Y Translation
11	+Z Translation
12	-Z Translation
13	Hold Function
14	Free Function
15	G & N Autopilot Control

NOTE:
All of the input signals in Channel 31 are inverted; that is, a ZERO bit indicates that the discrete is ON.

INPUT CHANNEL 32

BIT	
1	+Pitch Minimum Impulse
2	-Pitch Minimum Impulse
3	+Yaw Minimum Impulse
4	-Yaw Minimum Impulse
5	+Roll Minimum Impulse
6	-Roll Minimum Impulse
7	Spare
8	Spare
9	Spare
10	Spare
11	LM Attached
12	Spare
13	Spare
14	Proceed (Standby button)
15	Spare

NOTE:
All of the input signals in Channel 32 are inverted; that is, a ZERO bit indicates that the discrete is ON.

CHANNEL BIT ASSIGNMENTS (CM)

INPUT CHANNEL 33

BIT	
1	Spare
2	Range Unit Data Good
3	Spare
4	Zero Optics
5	CMC Control
6	Not Used
7	Not Used
8	Spare
9	Spare
10	Block Uplink Input*
11	Uplink Too Fast
12	Downlink Too Fast
13	PIPA Fail
14	AGC Warning
15	AGC Oscillator Alarm

*This bit reads ONE when accept uplink signal is present at interface.

NOTE:
All of the input signals in Channel 33 are inverted; that is, a ZERO bit indicates that the discrete is ON.

OUTPUT CHANNEL 77 – (RESTART MONITOR)

BIT	
1	Parity Fail (E or F)
2	Parity Fail (E memory)
3	TC Trap
4	RUPT Lock
5	Nightwatchman
6	Voltage Fail
7	Counter Fail
8	Scalar Fail
9	Scalar Double Frequency Alarm

P00—CMC IDLING PROGRAM

Purpose:

1. To maintain the CMC in a condition of readiness for entry into other programs.
2. To update the CSM and LM state vectors every four time steps.

Assumptions:

1. This program is automatically selected by V96E, which may be done during any program. State vector integration is permanently inhibited following V96E. Normal integration functions will resume after selection of any program or extended verb. P00 integration will resume when P00 is reselected. Usage of V96 can cause incorrect W-matrix and state vector synchronization.
2. Program changes are inhibited during integration periods and program alarm 1520_8 will occur if a change is attempted when inhibited.

Sequence of Events:

V37E00E

V06N38E

Optional Display

V06N38	Time of State Vector Being Integrated	00XXX h 000XX min 0XX.XX s

P01—PRELAUNCH OR SERVICE—INITIALIZATION PROGRAM

Purpose:

1. To initialize the platform for the prelaunch programs.
2. To provide an initial stable member orientation for Gyrocompassing (P02).

Assumptions:

1. Erasable locations have been properly initialized. (Azimuth, +1; Latitude, +1; LAUNCHAZ, +1; IMU compensation parameters).

Sequence of Events:

V37E01E

No Att Light — ON, then OFF. Initializes the system and coarse aligns the platform to the desired orientation.

AGC advances to P02.

P02—PRELAUNCH OR SERVICE—GYROCOMPASSING PROGRAM

Purpose:

1. To provide the proper stable member orientation for launch.

Assumptions:

1. This program may be interrupted to perform the Prelaunch or Service—Optical Verification of Gyrocompassing program (P03).
2. V75 will be keyed in and displayed during this program to permit crew backup of the liftoff discrete.
3. The program is automatically selected by the Initialization program (P01).
4. This program has the capability (via V78E) to change the launch azimuth of the stable member while gyrocompassing.

P02 (continued)

Sequence of Events:

P02 entered automatically from P01.

Vertical erect for 640 seconds, then gyrocompass.

V78E Optional entry if launch azimuth change is desired.

Flashing V06N29	XSM Launch Azimuth	XXX.XX deg

V21E. Enter new launch azimuth.

Vertical erect for 320 seconds, then gyrocompass.

V75E Optional at Liftoff if automatic Liftoff discrete is not received.

AGC advances to P11 at liftoff.

P03–PRELAUNCH OR SERVICE–OPTICAL VERIFICATION OF GYROCOMPASSING

Purpose:

1. To provide an optical check for verification of alignment of the stable member during gyrocompassing prior to launch.

Assumptions:

1. The astronaut has zeroed the optics just prior to program (P03) selection.
2. A minimum of 45 minutes between V78E and P03 (V65E) assures proper damping of transients.
3. In order to prematurely terminate this program and return to P02 the astronaut may key in V34E on any flashing display.

Sequence of Events:

Zero Optics for 15 seconds.

V65E

P03 displayed.

V05N30	Target ID (R3)	00001
Flashing V06N41	Target Azimuth	XXX.XX deg
	Target Elevation	XX.XXX deg

Target 1 coordinates.

V24E. Change azimuth and elevation if desired.

PRO

V05N30	Target ID (R3)	00002
Flashing V06N41	Target Azimuth	XXX.XX deg
	Target Elevation	XX.XXX deg

Target 2 coordinates.

V24E. Change azimuth and elevation if desired.

Optics Mode — CMC.

PRO

CMC drives optics LOS to Target 1.

Flashing V51		

Optics to Manual — Mark on Target 1.

Flashing V50N25	Checklist Code	00016

Request terminate Mark sequence.

P03 (continued)

MARK REJECT
(If mark was unsatisfactory), and recycle to Flashing V51.

PRO (if mark was satisfactory), and continue.

CMC drives optics LOS to Target 2.

Flashing
V51

Optics to Manual – Mark on Target 2.

Flashing V50N25	Checklist Code	00016

Terminate mark sequence.

MARK REJECT
(If mark was unsatisfactory), and recycle to previous Flashing V51.

PRO (If mark was satisfactory), and continue.

Flashing V06N93	Alignment Error In Delta Gyro Angles	X XX.XXX deg Y XX.XXX deg Z XX.XXX deg

Displays Y_{SM} and X_{SM} leveling error and X_{SM} azimuth error.
V24E to zero Y and X leveling errors.

PRO Torques Z gyro to eliminate azimuth error.

V34E Terminates optical verification and returns to P02.

P06—CMC POWER DOWN PROGRAM

Purpose:

1. To transfer the CMC from the operate to the standby condition.

Assumptions:

1. If the computer power is switched off, the AGC Update program (P27) would have to be done to update the state vector and computer clock time.
2. The AGC is capable of maintaining an accurate value of ground elapsed time (GET) for only 23 hours when in the Standby mode. If the AGC is not brought out of the standby condition to the running condition at least once within 23 hours, the AGC value of GET must be updated.
3. Once the program has been selected, the AGC must be put in Standby. When P06 appears, the AGC will not honor a new program request (V37EXXE), a terminate (V34E), or an ENTER in response to the request for standby.

Sequence of Events:

V37E06E

Flashing V50N25	Checklist Code	00062

Power down AGC.

If IMU power off desired – (CB). IMU Operate – open.

PRO Until Standby light on.

TURN-ON

Standby light on.

PRO Until Standby light off.

Flashing
V37

00E Select P00

If IMU power up desired – (CB). IMU Operate – close.

No Att light on for 90 seconds.

P11—EARTH ORBIT INSERTION MONITOR PROGRAM

Purpose:

1. To indicate to the astronaut that the AGC has received the liftoff discrete.
2. To generate an attitude error indication on the FDAI error needles, scaled for the 50/15 setting; from liftoff to the beginning of pitchover/rollout the attitude error is equal to the difference between the current vehicle attitude and the attitude stored at liftoff. During pitchover/rollout the attitude error is equal to the difference between the current vehicle attitude and the AGC nominal computation of vehicle attitude based on the stored polynomials in pitch and roll.
3. To display AGC computed trajectory parameters.
4. AGC takeover of Saturn during Boost

   a. Automatic Control—First Stage Only: should the saturn platform fail the astronaut may set the LV Guidance Switch to the CMC position. This stores the current attitude errors as a bias. The Attitude Error routine for each cycle thereafter will compute the attitude error, subtract the bias, and transmit the difference information to the Saturn Instrumentation Unit (IU) for steering.

   b. Manual Control—The astronaut may select the Saturn stick function via V46E (DAP configuration = 3). This will terminate the Attitude Error routine.

Assumptions:

1. The program is normally automatically selected by the Gyrocompassing program (P02) when the AGC receives the liftoff discrete from the SIVB. In the backup case it would have been selected by keying in V75 ENTER.
2. The orbit parameter display routine is available by keying in V82E.

Sequence of Events:

V75 Enter is not keyed unless the liftoff discrete fails and P11 does not start automatically.

P11 displayed — Average G on.

V06N62	Inertial Velocity Magnitude	XXXXX. ft/s
	Altitude Rate	XXXXX. ft/s
	Altitude	XXXX.X nmi

Pitch/roll polynomial start at liftoff +11.85 seconds.

Terminate polynomial at liftoff +161.35 seconds.

V82E Orbital parameter display.

Flashing	Apogee Altitude	XXXX.X nmi
V16N44	Perigee Altitude	XXXX.X nmi
	TFF	XXbXX min/s

PRO

V37E00E

Average G off. P00 is selected.

V46E While in P11 will terminate polynomial computations and enable the RHC to steer the Saturn vehicle through the AGC interface.

P15—TLI INITIATE/CUTOFF

Purpose:

1. Provide backup for initiation of Saturn Time Base 6 (TB6), S-IVB, injection sequence start.
2. Provide TLI burn monitor capability during a Saturn IU controlled TLI maneuver (Saturn DAP in IU/Display Operational Mode).
3. Provide automatic TLI shutdown capability during a CMC controlled TLI maneuver (Saturn DAP in CMC/Steer Operational Mode).

Assumptions:

1. The TLI target parameters VI C/O (velocity magnitude at cutoff), TB6 (GET of TB6 initiation), and DTF (a bias to compensate for tailoff Delta V and actuator delays) are all available.

Sequence of Events:

V37E15E

Flashing V06N33	GET of TB6 Initiation	00XXX h 000XX min 0XX.XX s

V25E to Load desired TB6 time.

PRO

Flashing V06N14	Velocity Magnitude at S-IVB Cutoff	XXXXX. ft/s

V21E to Load desired velocity magnitude

PRO

V06N95	Time From TLI Ignition (TFI)	XXbXX min/s
	Velocity to be Gained (Vg)	XXXXX. ft/s
	Velocity Magnitude (VMAGI)	XXXXX. ft/s

UPLINK activity Light and S-IVB injection sequence start discrete ON for 10 seconds at TB6 start time (TIG minus 9 minutes 38 seconds).
DSKY blanks for 5 seconds at TIG minus 105 seconds.
Average G on at TIG minus 100 seconds.
V06N95 returns.
At ignition plus 10 seconds, R1 equals time from cutoff (TFC). XXbXX min/s
S-IVB cutoff discrete issued when V1 C/O attained.

Flashing V16N95	Same as N95 above but TFC display frozen.	

PRO

Flashing V37	Select New Program	

P20 -- UNIVERSAL TRACKING

Purpose:

1. Control CSM attitude/optics or attitude rates depending on which of the following five options is selected.

   Option 0 — Point a specified S/C vector along the LOS to the LM without constraining rotation about the vector (VECPOINT). This option is used to acquire the LM in the SXT field of view and to point the CSM transponder at the LM.

   Option 1 — Point a specified S/C vector at a specified celestial body without constraining rotation about the vector (VECPOINT).

   Option 2 — Perform rotation about a specified S/C vector at a specified rate and beginning at a specified time. This option is normally used to effect PTC or initiate pitchover for landmark tracking.

   Option 4 — Point a specified S/C vector along the LOS to the LM while constraining rotation about the vector (three-axis). This option is used to acquire the LM in the SXT field of view and to point the CSM transponder at the LM.

   Option 5 — Point a specified S/C vector at a specified celestial body while constraining rotation about the vector (three-axis).

2. Update the LM or CSM State vector on the basis of optical tracking data and/or VHF range data (Options 0 and 4 only).

Assumptions:

1. The GNCS is normally in control of the vehicle in the Auto mode. If the astronaut assumes control of the vehicle with the RHC, the CSM will remain at the attitude it is driven to. Regardless of mode selection the CMC will calculate the desired tracking attitude.
2. The LM is maintaining a preferred tracking attitude to correctly orient the optical beacon (Options 0 or 4).
3. During rendezvous, the W-matrix is initialized by keying V93E, a fresh start (V36E), uplinked state vector update, automatically during MINKEY, and upon entering P22, P23, or P24.
4. The optics and VHF ranging mark counters are used to count the number of marks, by source, which are used to update either state vector. The counters are zeroed by W-matrix initialization, completion of P37, and by a fresh start.
5. This program may be selected manually or internally by the MINKEY controller.

P20 (continued)

Sequence of Events:

Option 0 may be initiated automatically by the MINKEY controller.
The sequence will start at RENDEZVOUS below if automatic initiation.

V37E20E

Flashing	Option ID Code	00024
V04N06	Tracking Option Code	0000X

V22E to Load desired option:
0 = Rendezvous (VECPOINT)
1 = Celestial body (VECPOINT)
2 = Rotation (PTC/ORB rate)
4 = Rendezvous (Three-axis
5 = Celestial body (Three-axis)
(Option 0 assumed for MINKEY rendezvous)

PRO

Flashing	GAMMA	XXX.XX deg
V06N78	RHO	XXX.XX deg
	OMICRON	XXX.XX deg

V25E to Load the desired coordinates.

GAMMA, RHO are rotational coordinates of the desired pointing axis or axis of rotation. The coordinates represent Euler rotations of the S/C +X axis about the +Z axis and then about the new +Y axis.

SIMBAY pointing	= 90°, 52.25°
COAS pointing	= 0°, 0°
Optics pointing	= 0°, -35°
PTC rotation	= 0°, 0°
Orb rate rotation	= 90°, 0°

(Optics coordinates are assumed for rendezvous but may be changed at anytime.)

OMICRON is an attitude constraint about the pointing vector for three-axis options. It is ignored in VECPOINT options.

0° = Heatshield forward
180° = Apex forward

PRO

Flashing	Desired Rate (Option 2 only)	X.XXXX deg/s
V06N79	Desired Deadband	XXX.XX deg

V24E to Load desired rate and deadband.

PRO to appropriate option

CELESTIAL BODY TRACK

Flashing		
V01N70	Star ID Code	000XX

V21E to load desired Star Code.

PRO If Star Code ≠ 00, Go to RENDEZVOUS

Flashing	Unit position vector	X .XXXXX
V06N88	of desired planet	Y .XXXXX
		Z .XXXXX

V25E to load position vector.

PRO to RENDEZVOUS

P20 (continued)

ROTATION

Flashing V06N34	GET at which rotation maneuver is to start	00XXX h 000XX min 0XX.XX s

V25E to load desired GET (all 0's specify present time)

PRO to TERMINATE (rotation will commence at specified GET)

RENDEZVOUS

Flashing V50N18	Desired FDAI angles for automaneuver	OG(R) XXX.XX deg IG(P) XXX.XX deg MG(Y) XXX.XX deg

PRO

V06N18	Maneuver in Progress
Flashing V50N18	Maneuver Complete

ENTER Terminates automaneuver routine. If rendezvous option, go to appropriate marking sequence, otherwise go to TERMINATE.

Note: R61 maintains tracking attitude computation. If the attitude error between the vehicle pointing axis and the LOS to the target is greater than 10 degrees, the astronaut will be alerted by:

UPLINK ACTY light on

V58E Request automaneuver routine. Go to RENDEZVOUS and execute automaneuver.

OPTICS MARKING

The rendezvous sighting mark routine is called automatically. Proceed with optics marking.

VHF RANGE MARKING

If MINKEY controller active, VHF marking is initiated automatically when the range is within 327.67 nmi.

V87E Sets VHF Range Flag manually.
Enables ranging marks for use by R22 at 1-minute intervals.

V88E Resets VHF Range Flag manually.
Disables ranging marks. Use V87E to reenable.

BACKUP COAS MARKING

V54E Calls the backup sighting mark routine.

Flashing V06N94	Optics angle coordinates for alternate LOS (COAS)	Shaft XXX.XX deg Trunnion XX.XXX deg

V24E to load coordinates.

COAS LOS coordinates can be determined by sighting on a boresight star and using P52 to compute the desired optics angles to acquire the star in the SXT field.

PRO

Flashing V53N45	MARK Counter (VHF - Optics) TFI of Next Burn	XXbXX XXbXX min/s
MGA at TIG		XXX.XX deg

ENTER Used for marking with COAS. V86E is used to reject a backup mark.

Note: N79 may be modified to specify +X axis pointing for COAS marking at any time. The program will calculate a maneuver to +X axis tracking attitude.

P20 (continued)

UPDATE DISPLAY

If any mark produces a state vector position or velocity magnitude change greater than a preloaded value, the astronaut receives a display of the data for approval/disapproval.

Flashing V06N49	Delta R	XXXX.X nmi
	Delta V	XXXX.X ft/s
	Source Code (1–OPT, 2–VHF)	0000X

PRO Uses data and updates the state vector.

V32E Rejects mark data and state vector update not done.

TERMINATE

V56E

Flashing V37	Select New Program	

P21–GROUND TRACK DETERMINATION PROGRAM

Purpose:

1. Provide astronaut with details of his ground track.

Assumptions:

1. Can be used while CSM is in either earth or lunar orbit to determine ground track of either LM or CSM.
2. Vehicle whose ground track parameters are calculated to remain in freefall from the present time until T Lat Long.

Sequence of Events:

V37E21E

Flashing V04N06	Option Code (specify vehicle)	00002
	Vehicle Code (1–CSM, 2–LM)	00001

CSM is assumed: if LM is desired, V22E2E

PRO

Flashing V06N34	Time Lat/Long	00XXX. h 000XX. min YY.XX s

V25E. Key in time at which vehicle position is desired. Time = 0 specifies present time.

PRO

Flashing V06N43	Latitude of Vehicle	XXX.XX deg (+ north)
	Longitude of Vehicle	XXX.XX deg (+ east)
	Altitude Above Launch Pad/ Landing Site	XXXX.X nmi

V32E recycles to Flashing V06N34 for new display.

V06N73E Optional Display

Flashing V06N73	Altitude	XXXXXb nmi
	Velocity	XXXXX. ft/s
	Flight Path Angle	XXX.XX deg

KEY REL

Flashing V06N43	Same as N43 above.	

PRO

Flashing V37	Select New Program.	

P22–ORBITAL NAVIGATION PROGRAM

Purpose:

1. Locate and track landmark suitable for navigation purposes.
2. Obtain sighting marks on chosen landmark.
3. Calculate the orbital parameter changes generated by landmark sightings.
4. Update state vector as result of sightings (if sightings ok).
5. Update coordinates of known landmarks.
6. Provide coordinates of unknown landmarks.
7. Track preloaded landing site.
8. Provide coordinates of new landing site.
9. Provide coordinates of an offset landing site.
10. Align optics along an advanced orbit ground track for purpose of tracking and mapping a new landing site.

Assumptions:

1. There are two types of landmark tracking methods:
   a. "Known" Landmark Tracking–The tracking of an earth landmark made known to the AGC by latitude, longitude/2, and altitude, and the tracking of a lunar landmark made known to the AGC by its latitude, longitude/2, and altitude.
   b. "Unknown" Landmark Tracking–The tracking of a landmark or surface feature identified to the AGC as an unknown landmark, one whose coordinates are not known.
2. There are two types of landing site mapping methods:
   a. Landing Site Designation–Track and mark on an unknown landmark. Store the resulting coordinates in Landmark Code 01. If mapping only is desired (that is, no state vector calculation or corrections), the astronaut need take only one mark.
   b. Landing Site Offset–While tracking and marking on a primary landmark (known or unknown), point the optics SLOS at the chosen landing site and mark it once, (at least one mark on the primary landmark must have been made prior to this), then continue marking on the primary landmark. Store the resulting coordinates of the offset landing site in Landmark Code 01.
3. Acquisition of a landmark may be aided by the AGC by use of the Automatic Optics Positioning routine (R52).
4. Acquisition of a preloaded landing site may be aided by keying Landmark Code 01 into the V05 N70 display for use by the Automatic Optics Positioning routine (R52).
5. The Ground Track Determination program (P21) is available to aid the crew in choosing appropriate landmarks prior to selection of this program.
6. The Ground Track Determination program (P21) is available to the crew following this program to provide updated ground track information.
7. Possible attitude control methods might be as follows (in all cases care must be taken to monitor possible impending IMU gimbal lock).
   a. Manual control by the pilot or navigator with the rotational hand controller.
   b. Manual rate control by the navigator with the minimum impulse control in the GNC free mode.
   c. Automatic pitchover maneuver via P20, Option 2.
8. Selection of this program will terminate Options 0 and 4 of P20.

Sequence of Events:

V37E22E

Flashing V06N45	Maximum MGA with Spacecraft X Axis in Orbital Plane	(R3)	XXX.XX deg

If expected MGA is greater than 60 degrees, exit P22 and realign IMU (P52).

P22 (continued)

ZERO Optics for 15 seconds.

OPTICS Mode – CMC

PRO If in earth orbit go to Flashing V06N89 below.

Flashing V05N70	Landmark Code (R2)	ABCDE

A = 1 (known landmark), 2 (unknown landmark)
B = index of offset indicator
C = not used
DE = Landmark ID (00, 01, or 5X)

PRO If A = 2, go to Flashing V51; if A = 1 and DE ≠ 00, go to Flashing V06N92.

Flashing V06N89	Landmark Latitude	XX.XXX deg
	Longitude/2	XX.XXX deg
	Altitude of LMK	XXX.XX nmi

V25E. Load landmark coordinates

PRO

V06N92	Auto position optics to landmark or, if DE = 5X, to 60 degrees ahead of vehicle location on ground track.

Maneuver vehicle at orbital rate for tracking.

OPTICS Mode – Manual

Flashing V51

Request remarks.

MARK

Offset landing site mark followed by V52E.

Flashing V50N25	Checklist Code	00016 (After five marks taken)

PRO Terminate mark sequence.

Flashing V05N71	Same as N70 above.	ABCDE

V25E to correct data.

(Insure B corresponds to the mark on offset landing site or is set to zero.)

PRO

Flashing V06N89	Same as N89 above.

V25E to correct data.

PRO

Flashing V06N49	Delta R	XXXX.X nmi
	Delta V	XXXX.X ft/s

Change in position and velocity magnitudes with incorporation of landmark sighting.

PRO Accepts data. V32E to reject data and recycle to Flashing V05N70.

Flashing V06N89	Same as N89 above except an update of landmark coordinates or map of offset landing site coordinates or map of unknown landmark. If this landmark or offset landing site is desired as the new landing site, key PRO to update landing site coordinates and recycle to Flashing V05N70 display. To retain landing site but redo the tracking, key V32E and recycle to Flashing V05N70 display.

V34E

Flashing V37	Select New Program.

P23—CISLUNAR MIDCOURSE NAVIGATION PROGRAM

Purpose:

1. To do midcourse navigation by incorporation of star/earth and star/moon optical measurements.

Assumptions:

1. Prior to each mark the program will call for an optics calibration which may be done or bypassed dependent upon the stability history of the calibration.
2. To perform the mark the astronaut should finally select minimum impulse control (either GNCS or SCS) and the optics should be in manual in order to maintain the fix.
3. The optics should be on for 15 minutes prior to marking.
4. The AGC does not check for moon/earth occultation or sun brightness in this program.
5. Nouns 70 and 71 are checked to assure that the codes fall within certain permissible limits. (Check to assure that R2 and R3 do not both equal zero or do not both not equal zero, R1 = 0 to 37 (octal), R2 = ABCDE, C = 1 or 2, R3 = ABCDE, C and D = 1 or 2). Noun 89 is also checked to assure that the values for R1 and R2 fall within certain defined limits (-90 degrees to +90 degrees).
6. Noun 88 allows that any proportional set of components may be loaded for planet direction. However, a unit vector is recommended.
7. Selection of this program will terminate Options 0 and 4 of P20.

Sequence of Events:

V37E23E

	Flashing V50N25	Checklist Code	00015

Perform celestial body acquisition.

PRO If manual acquisition desired, key ENTER and go to Flashing V59.

Flashing V01N70	Star ID Code	000XX

V21E to load star code XX.

PRO If star ID ≠ 00, go to Flashing V50N18.

Flashing V06N88	Unit Position Vector of Planet	X .XXXXX Y .XXXXX Z .XXXXX

V25E to load planet vector.

PRO

Flashing V50N18	Desired FDAI Angles for Automaneuver	OG(R) IG(P) MG(Y)	XXX.XX deg XXX.XX deg XXX.XX deg

OPTICS ZERO for 15 seconds

OPTICS Mode → Manual

PRO Automaneuver LLOS to selected star.

V06N18	Maneuver in process.
Flashing V50N18	Maneuver complete.

ENTER

Terminate maneuver routine.

Flashing V59	Request optics calibration mark.

To bypass optics calibration, key ENTER and go to Flashing V05N70.

P23 (continued)

MARK

LLOS and SLOS superimposed on star.

Flashing V06N87	Trunnion Bias	(R2)	XX.XXX deg

Mark may be repeated for additional bias computations.

PRO V32E will recycle to Flashing V50N25.

Flashing V05N70	Star ID Code	000XX
	Landmark ID	ABCDE
	Horizon ID	00FG0

V25E to load desired data.

ABDE = not used
C = 1 (earth landmark), 2 (lunar landmark)
F = 1 (earth horizon), 2 (lunar horizon)
G = 1 (near horizon), 2 (far horizon)

PRO (if R2 ≠ 0, R3 = 0) or (if R2 = 0, R3 ≠ 0)
If PLANET/HOR sighting, go to Flashing V06N88.
If STAR/HOR sighting, go to Flashing V50N25.

Flashing V06N89	Latitude of Landmark	XX.XXX deg
	Longitude/2	XX.XXX deg
	Altitude	XXX.XX nmi

V25E to load landmark coordinates.

PRO If STAR/LMK sighting, go to Flashing V50N25.

Flashing V06N88	Unit Planet Vector	X .XXXXX
		Y .XXXXX
		Z .XXXXX

V25E to load planet vector.

PRO

Flashing V50N25	Checklist Code	00202

Request automaneuver LLOS to LMK/HOR.

PRO Specifies a 3-axis maneuver. ENTER may be used to specify VECPOINT computed maneuver which, if necessary, provides gimbal lock avoidance.

Flashing V50N18	Same as N18 above. Request automaneuver.

PRO

V06N18	Same as N18 above. Maneuver in process.
Flashing V50N18	Same as N18 above. Maneuver complete.

A V94E may be used to reacquire the landmark with an automaneuver.

OPTICS Mode – CMC

ENTER

Terminate automaneuver and autoposition.
Optics SLOS to the selected STAR/PLANET.

V06N92	Desired Optics Angles		
		Shaft	XXX.XX deg
		Trunnion	XX.XXX deg

OPTICS Mode – Manual

Flashing V51	Request Mark (STAR/PLANET and LMK/HOR superimposed).

MARK

Flashing V50N25	Checklist Code	00016

P23 (continued)

PRO Terminate mark sequence.

Flashing V05N71 — Same as N70 above.

V25E to correct data.

PRO If PLANET/HOR sighting, go to Flashing V06N88.
If STAR/HOR sighting, go to Flashing V06N49.

Flashing V06N89 — Same as N89 above

V25E to correct landmark coordinates

PRO If Star/LMK sighting, go to Flashing V06N49

Flashing V06N88 — Same as N88 above.

V25E to correct planet vector.

PRO State vector update computed.

Flashing V06N49	Delta R	XXXX.X nmi
	Delta V	XXXX.X ft/s

Magnitude of the position and velocity vector changes displayed for astronaut approval.

PRO Accept data. V32E reject data, go to Flashing V37.

Flashing V37 — Select New Program.

P24—RATE AIDED OPTICS TRACKING PROGRAM

Purpose:

1. To locate and acquire a given landmark via the automatic optics positioning routine (R52) with the Optics Mode switch in the CMC position.
2. When acquired, to track the given landmark via the rate-aided optics feature of the automatic optics positioning routine with the optics in the Manual position.
3. To obtain and downlink to the ground an unlimited number of sighting marks on the chosen landmark and to update the landmark coordinates.

Assumptions:

1. The coordinates of the landmark are known approximately.
2. At low altitudes, tracking may be facilitated by manually initiating a pitch-over maneuver via P20, Option 2.
3. The astronaut will assist in the tracking of the chosen landmark when in the rate-aided mode (Optics switch in Manual) by supplying inputs via the optics hand controller.
4. Selection of this program will terminate Options 0 and 4 of P20.

P24 (continued)

Sequence of Events:

V37E24E

Flashing	Landmark Latitude	XX.XXX deg
V06N89	Longitude/2	XX.XXX deg
	Altitude	XXX.XX nmi

V25E to load approximate landmark coordinates.

ZERO OPTICS for 15 seconds.

OPTICS Mode – CMC

PRO

V06N92 Desired Optics Angles

Shaft	XXX.XX deg
Trunnion	XX.XXX deg

AGC will auto-position the optics LOS to the landmark. The AGC will update the desired optics angles each 0.05 second plus integration time.

OPTICS Mode – Manual

Flashing V51 — AGC will now compute optics drive rates to maintain the landmark track by back differencing the desired optics angles and compensating for computational and system delays. Desired optics angles are updated with state vector and landmark updates.

Adjust tracking rate with optics hand controller

Provide a manual optics drive assist to trim the AGC commanded drive rate for aligning the target and reticle. AGC commanded rates are updated through subsequent marking and landmark updates.

MARK

Unlimited marking is accepted. Marks are transmitted downlink and are used to update the landmark coordinates when the number of R52 cycles since the last landmark update reaches a prelaunch erasable value. The landmark update is subsequently used to update the desired optics drive rate and maintain the landmark track.

PRO Terminates Program.

Flashing V37 — Select New Program

P27—AGC UPDATE PROGRAM

Purpose:

1. To insert information into the AGC via the digital uplink by transmission from the ground or via the DSKY keyboard by crew manual input.

Assumptions:

1. AGC updates are of four categories:
   a. Provide an update for AGC liftoff time (V70).
   b. Provide an octal increment for the AGC clock only (V73).
   c. Provide load capability for a block of sequential erasable locations (1-18 inclusive locations whose address is specified) (V71).
   d. Provide load capability for 1-9 inclusive individually specified erasable locations (V72).
2. Update is allowed in the CSM when the AGC is in P00, P02 or P20 (Options 1, 2 or 5), and if the DSKY is available.
3. The UPTEL Accept/Block switch must be in Accept for telemetry update.
4. The automatic mode of update is program selection and update via the ground by uplink transmission. The only difference between this and manual selection by the astronaut is that the DSKY responses are keyed in by the astronaut rather than transmitted.

Sequence of Events:

V37E00E	
Select P00 if not selected.	
Up Telemetry switch — Accept	Enable Uplink.
Uplink Acty light — On	Program selected via Uplink. Mode window. displays 27.
V37E00E	
Select P00.	
Up Telemetry switch — Block	Disable uplink.

P29-TIME OF LONGITUDE

Purpose:

1. To provide the astronaut with an estimated time of passage over a selected longitude.

Assumptions:

1. This program may be selected while the CSM is in either earth or lunar orbit to find the time of longitude of either the CSM or LM.
2. This program assumes the vehicle whose ground track parameters are calculated remains in freefall from the selected start time until the time of longitude crossing.

Sequence of Events:

V37E29E

Flashing	Option ID Code	00002
V04N06	Vehicle Option (1—CSM, 2—LM)	0000X

V22E to load desired vehicle code.

PRO

Flashing	GET at which CMC	00XXX h
V06N34	begins search (all 0's for	000XX min
	present time)	0XX.XX s

V25E to load desired time.

PRO

Flashing	Desired Longitude (R2)	XXX.XX deg
V06N43		

V22E to load desired longitude.

PRO

Flashing	Time of longitude crossing	00XXX h
V06N34	by specified vehicle	000XX min
		0XX.XX s

PRO V32E to previous flashing V06N43 to change longitude.

Flashing	Latitude at Longitude Crossing	XXX.XX deg
V06N43	Longitude Specified	XXX.XX deg
	Altitude of Vehicle at Longitude Crossing	XXXX.X nmi

PRO V32E to Flashing V04N06 to recycle.

Flashing	
V37	Select New Program

P30—EXTERNAL DELTA V PROGRAM

Purpose:

1. To accept targeting parameters obtained from a source(s) external to the AGC and compute therefrom the required velocity and other initial conditions required by the AGC for execution of the desired maneuver. The targeting parameters inserted into the AGC are the time of ignition (TIG) and the impulsive ΔV along CSM local vertical axes at TIG.

Assumptions:

1. Target parameters (TIG and $\Delta V(LV)$) may have been loaded from the ground during a prior execution of P27.
2. External Delta V flag is set during the program to designate to the thrusting program that external Delta V steering is to be used.

Sequence of Events:

V37E30E

Flashing V06N33	Ground Elapsed Time of Ignition (TIG)	00XXX. h 000XX. min 0XX.XX s

V25E to load desired TIG.

PRO

Flashing V06N81	Impulsive Delta V at TIG in Local Vertical Coordinates	X XXXX.X Y XXXX.X Z XXXX.X

V25E to load desired Delta V.

PRO

Flashing V06N42	Apogee/Apolune Altitude Perigee/Perilune Altitude Magnitude of Delta V at TIG	XXXX.X nmi XXXX.X nmi XXXX.X ft/s

PRO

Flashing V16N45	Mark Counter (VHF—Optics) Time from Ignition (TFI) Middle Gimbal Angle at TIG with Vehicle +X Axis in Direction of Thrust	XXbXX marks XXbXX min/s XXX.XX deg

If the REFSMMAT flag is reset (that is, the IMU is not aligned) MGA will equal -00002.

PRO

Flashing V37	Select New Program.

P31—HEIGHT ADJUSTMENT MANEUVER (HAM) PROGRAM

Purpose:

1. To calculate the parameters associated with the Height Adjust Maneuver (HAM) for Delta V burns.
2. To store the HAM target parameters for use by the desired thrusting program.

Assumptions:

1. At a selected TPI time the line of sight between the CSM and the LM is selected to be prescribed angle (E) from the horizontal plane defined at the active position.
2. CDH Delta V is selected to minimize the variation of the altitude difference between the orbits.
3. HAM burn is defined such that the impulsive Delta V is in the horizontal plane defined by the active vehicle position at HAM ignition.
4. The pericenter altitude of the orbit following CSI and CDH must be greater than 35,000 ft (lunar orbit) or 85 nmi (earth orbit) for successful completion of the program.
5. The CSI and CDH maneuvers are originally assumed to be paralled to the plane of the LM orbit. Out-of-plane parameters are computed for TIG (HAM) and displayed. In addition, the N81 display is modified to establish an antinode at HAM.
6. If P20 is in operation while the progiam is operating, the astronaut may hold at any flashing display and turn on the rendezvous sighting mark routine, take optics marks and/or allow VHF ranging marks to accumulate.
7. TIG (HAM) is computed to be 180 degrees central angle before TIG (CSI).
8. The ISS need not be on to complete this program unless automatic state vector updating is desired by the Universal Tracking program (P20).
9. The external Delta V flag is set during this program to designate to the thrusting program that external Delta V steering is to be used.
10. This program may be selected manually or internally by the MINKEY controller.

P31 (continued)

Sequence of Events:

If entered automatically by MINKEY controller, go to MANEUVER.

V37E31E

Note: If P20 rendezvous option is not running, P20 Option 0 is activated now.

Flashing	MINKEY Rendezvous Option	
V50N25	Checklist Code	00017

PRO Elects MINKEY automatic rendezvous sequencing.
ENTER Elects manual sequencing.

MANEUVER

If the tracking attitude error between the vehicle pointing axis and the LOS to the LM is less than 10 degrees (computed by P20/R61), go to TARGETING.

Flashing	Desired FDAI angles for	OG(R)	XXX.XX deg
V50N18	Automaneuver	IG(P)	XXX.XX deg
		MG(Y)	XXX.XX deg

PRO

V06N18	Maneuver in Progress	

If MINKEY sequence, go to TARGETING when maneuver is completed.

Flashing		
V50N18	Maneuver Complete (manual sequence)	

ENTER Terminates automaneuver routine; go to TARGETING.

Note: P20 (R61) will maintain tracking attitude computations. If the attitude error becomes greater than 10 degrees, the astronaut will be alerted by:
UPLINK ACTY light on.

V58E

Request automaneuver execution; go to MANEUVER.

TARGETING

Flashing	GET of CSI Ignition TIG (CSI)	00XXX h
V06N11		000XX min
		0XX.XX s

V25E to load desired TIG.

PRO

Flashing	Apsidal Crossing	0000X
V06N55	Elevation Angle	XXX.XX deg
	CENTANG	XXX.XX deg

V25E to load desired data.
Apsidal crossing is the future line of apsis crossing where TIG (CDH) is to occur.
Elevation angle is the angle between the CSM/LM LOS and the CSM local horizontal plane at TIG (TPI).
(For LM solution (P72), angle is between LM/CSM LOS and the LM local horizontal.)
CENTANG is an option code where R3 ≠ 0 specifies TIG (CDH) to occur at N (180) degrees from CSI maneuver and N = number entered in R1.

P31 (continued)

PRO

Flashing V06N37	GET of TPI Ignition TIG (TPI)	00XXX h 000XX min 0XX.XX s

V25E to modify TIG.

PRO

Flashing V06N33	GET of HAM Ignition TIG (HAM)	00XXX h 000XX min 0XX.XX s

V25E to modify TIG.

PRO

Flashing V16N45	Mark Counter (VHF-Optics) Time from Ignition TFI (HAM) MGA	XXbXX XXbXX min/s -00001

Mark counter updated by P20 which is running in the background.
MGA is displayed on the final pass through the program.

PRO Sets Final flag to execute final pass through program.

V32E Continues but Final flag not set.
Alarm Codes 00600 through 00606 may occur. If an alarm occurs, V32E recycles to V06N11 where the INPUT parameters may be adjusted for a new solution.

Flashing V06N90	Out-of-Plane Position (Y), Active Vehicle Out-of-Plane Velocity (YDOT), Active Vehicle Out-of-Plane Velocity (YDOT), Passive Vehicle	XXX.XX nmi XXXX.X ft/s XXXX.X ft/s

PRO

Flashing V06N81	Delta V at TIG (HAM) In Local Vertical Coordinates	X Y Z	XXXX.X ft/s XXXX.X ft/s XXXX.X ft/s

V25E to modify Delta V.

PRO If Final flag not set go to previous flashing V16N45

Flashing V16N45	Mark Counter (VHF-Optics) TFI (HAM) MGA	XXbXX XXbXX min/s XXX.XX deg

MGA will be the MGA at TIG (HAM). If the IMU is not aligned, MGA will be -00002. (For LM solution (P72) MGA is always -00002 on the final pass.)

PRO

If MINKEY controller is active, W matrix reinitialization is performed and the appropriate burn program is initiated.

If Delta V solution $<$ 7 ft/s, P41 is initiated.
If Delta V solution $\geq$ 7 ft/s, P40 is initiated.

Flashing V37	Select New Program (manual sequence)

P32—CSM COELLIPTIC SEQUENCE INITIATION (CSI) PROGRAM

Purpose:

1. To calculate parameters associated with the following concentric flight plan maneuvers: the Coelliptic Sequence Initiation (CSI) and the Constant Delta Altitude maneuver (CDH), for Delta V burns.

2. To store the CSI target parameters for use by the desired thrusting program.

Assumptions:

1. At a selected TPI time the line of sight between the CSM and the LM is selected to be a prescribed angle (E) from the horizontal plane defined at the active position.
2. The time between CSI ignition and CDH ignition must be computed to be greater than 10 minutes for successful completion of the program.
3. The time between CDH ignition and TPI ignition must be computed to be greater than 10 minutes for successful completion of the program.
4. CDH Delta V is selected to minimize the variation of the altitude difference between the orbits.
5. CSI burn is defined such that the impulsive Delta V is in the horizontal plane defined by the active vehicle position at CSI ignition.
6. The pericenter altitude of the orbit following CSI and CDH must be greater than 35,000 feet (lunar orbit) or 85 nmi (earth orbit) for successful completion of this program.
7. The CSI and CDH maneuvers are originally assumed to be paralled to the plane of the LM orbit. However, out-of-plane parameters are computed for TIG (CSI) and displayed. In addition, the N81 display is modified to establish an antinode at CSI.
8. If P20 is in operation while the program is operating, the astronaut may hold at any flashing display and take optics marks and/or allow VHF ranging marks to accumulate.
9. The ISS need not be on to complete this program unless automatic state vector updating is desired by the Universal Tracking program (P20).
10. The external Delta V flag is set during this program to designate to the thrusting program that external Delta V steering is to be used.
11. This program may be selected manually or internally by the MINKEY controller.

Sequence of Events:

If entered automatically by MINKEY controller, go to MANEUVER.

V37E32E

Note: If P20 rendezvous option is not running, P20 Option 0 is activated now.

Flashing	MINKEY Rendezvous Option	
V50N25	Checklist Code	00017

PRO Elects MINKEY automatic rendezvous sequencing.
ENTER Elects manual sequencing.
MANEUVER

If tracking attitude error between the vehicle pointing axis and the LOS to the LM is less than 10 degrees (computed by P20/R61), go to TARGETING.

Flashing	Desired FDAI angles for	OG(R)	XXX.XX deg
V50N18	Automaneuver	IG(P)	XXX.XX deg
		MG(Y)	XXX.XX deg

P32 (continued)

PRO

V06N18 Maneuver in Progress

If MINKEY sequence, go to TARGETING when maneuver is complete.

Flashing V50N18	Maneuver Complete (manual sequence)	

ENTER Terminates automaneuver routine. Go To TARGETING.

Note: P20 (R61) will maintain tracking attitude computations. If the attitude error becomes greater than 10 degrees, the astronaut will be alerted by:
UPLINK ACTY light on

V58E

Request automaneuver execution. Go to MANEUVER.

TARGETING

Flashing V06N11	GET of CSI Ignition TIG (CSI)	00XXX h 000XX min 0XX.XX s

V25E to load desired TIG.

PRO

Flashing V06N55	Apsidal Crossing Elevation Angle CENTANG	0000X XXX.XX deg XXX.XX deg

V25E to load desired data.

Apsidal crossing is the future line of apsis crossing where TIG (CDH) is to occur.

Elevation angle is the angle between the CSM/LM LOS and the CSM local horizontal plane at TIG (TPI)

(For LM solution (P72) angle is between LM/CSM LOS and the LM local horizontal)

CENTANG is an option code where R3 ≠ 0 specifies TIG (CDH) to occur at N(180) degrees from CSI maneuver and N = number entered in R1.

PRO

Flashing V06N37	GET of TPI Ignition TIG (TPI)	00XXX h 000XX min 0XX. XX s

V25E to load desired TIG.

PRO

Flashing V16N45	Mark Counter (VHF—Optics) Time from Ignition TFI (CSI) MGA	XXbXX XXbXX min/s -00001

Mark Counter updated by P20 which may be running in the background.
MGA is only displayed on the final pass through the program.

P32 (continued)

PRO Set Final flag.
V32 continues in program but Final flag is not set. Used when another pass is desired. Alarm Codes 00600 through 00606 may occur. If an alarm occurs, V32E recycles to V06N11 where the input parameters may be adjusted for a new solution.
If automatic MINKEY sequence, go to flashing V06N90.

Flashing V06N75	Delta Altitude at TIG (CDH)	XXXX.X nmi
	Delta Time of TIG (CSI/CDH)	XXbXX min/s
	Delta Time of TIG (CDH/TPI)	XXbXX min/s

TIG (CDH) is available by keying V06N13E.

PRO

Flashing V06N90	Out-of-Plane Position (Y) Active Vehicle	XXX.XX nmi
	Out-of-Plane Velocity (YDOT) Active Vehicle	XXXX.X ft/s
	Out-of-Plane Velocity (YDOT) Passive Vehicle	XXXX.X ft/s

PRO

Flashing V06N81	Delta V at TIG (CSI) In Local Vertical Coordinates	X	XXXX.X ft/s
		Y	XXXX.X ft/s
		Z	XXXX.X ft/s

PRO If automatic MINKEY sequence, go to Flashing V16N45.

Flashing V06N82	Delta V at TIG (CDH) In Local Vertical Coordinates	X	YXXX.X ft/s
		Y	XXXX.X ft/s
		Z	XXXX.X ft/s

PRO

If Final flag is reset, go to previous Flashing V16N45.

Flashing V16N45	Mark Counter (VHF–Optics)	XXbXX
	TFI (CSI)	XXbXX min/s
	MGA	XXX.XX deg

MGA will be the MGA at TIG (CSI). If the IMU is not aligned, MGA will be -00002. (For LM solution (P72) MGA is always -00002 on the final pass.)

PRO

If MINKEY controller is active, W-matrix reinitialization is performed and the appropriate burn program is initiated.

If Delta V solution $<$ 7 ft/s, P41 is initiated.
If Delta V solution $\geq$ 7 ft/s, P40 is initiated.

Flashing
V37 Select New Program (manual sequence)

P33—CSM CONSTANT DELTA ALTITUDE (CDH) PROGRAM

Purpose:

1. To calculate parameters associated with the Constant Delta Altitude maneuver (CDH), for Delta V burns.

2. To store the CDH target parameters for use by the desired thrusting program.

Assumptions:

1. This program is based upon previous completion of the Coelliptic Sequence Initiation (CSI) program (P32). Therefore:
   a. At a selected TPI time (now in storage) the line of sight between the CSM and the LM was selected to be a prescribed angle (E) (now in storage) from the horizontal plane defined at the active vehicle position.
   b. The time between CSI ignition and CDH ignition was computed to be greater than 10 minutes.
   c. The time between CDH ignition and TPI ignition was computed to be greater than 10 minutes.
   d. The variation of the altitude difference between the orbits was minimized.
   e. CSI burn is defined such that the impulsive Delta V is in the horizontal plane defined by the active vehicle position at CSI ignition.
   f. The pericenter altitudes of the orbits following CSI and CDH were computed to be greater than 35,000 feet (lunar orbit) or 85 nmi (earth orbit).
   g. The CSI and CDH maneuvers were assumed to be paralled to the plane of the LM orbit. However, out-of-plane parameters are computed for TIG (CDH) and displayed. In addition, the N81 display is modified to establish an antinode at CDH.
2. If P20 is in operation while this program is operating, the astronaut may hold at any flashing display and take optics marks, and/or he may allow VHF ranging marks to accumulate.
3. The ISS need not be on to complete this program unless automatic state vector updating is desired by the Universal Tracking program (P20).
4. The external Delta V flag is set during this program to designate to the thrusting program that external Delta V steering is to be used.
5. This program may be selected manually or internally by the MINKEY controller.

Sequence of Events:

If entered automatically by MINKEY controller, go to MANEUVER.

V37E33E

Note: If P20 rendezvous option is not running, P20 Option 0 is activated now.

Flashing V50N25	MINKEY Rendezvous Option Checklist Code	00017

PRO Elects MINKEY automatic rendezvous sequencing.
ENTER Elects manual sequencing.
MANEUVER
If the tracking attitude error between the vehicle pointing axis and the LOS to the LM is less than 10 degrees (computed by P20/R61), go to TARGETING.

Flashing V50N18	Desired FDAI angles for Automaneuver	OG(R)	XXX.XX deg
		IG(P)	XXX.XX deg
		MG(Y)	XXX.XX deg

P33 (continued)

PRO

V06N18 Maneuver in Progress

If MINKEY sequence, go to TARGETING when maneuver is complete.

Flashing
V50N18 Maneuver Complete (manual sequence)

ENTER Terminates automaneuver routine. Go to TARGETING.

Note: P20 (R61) will maintain tracking attitude computations. If the attitude error becomes greater than 10 degrees, the astronaut will be alerted by: UPLINK ACTY light ON

V58E

Request automaneuver execution. Go to MANEUVER.

TARGETING

Flashing V06N13	GET of CDH Ignition TIG (CDH)	00XXX h 000XX min 0XX. XX s

V25E to correct desired TIG.

PRO

Flashing V16N45	Mark Counter (VHF–Optics) Time from Ignition TFI (CDH) MGA	XXbXX XXbXX min/s -00001

Mark counter is updated by P20 which may be running in the background.
MGA is only displayed on the final pass.

PRO Set Final flag.
V32E continues in program but Final flag is not set. Used when another pass is desired.
If an Alarm occurs, a V32E may be used to recycle to V06N13 and readjust TIG.
If automatic MINKEY sequence, go to Flashing V06N90.

Flashing V06N75	Delta Altitude at TIG (CDH) Delta Time of TIG (CDH/TPI) Delta Time of TIG (TPI/Nom TPI)	XXX.XX nmi XXbXX min/s XXbXX min/s

TIG (TPI) is available by keying V06N37E.

PRO

Flashing V06N90	Out-of-Plane Position (Y) Active Vehicle Out-of-Plane Velocity (YDOT) Active Vehicle Out-of-Plane Velocity (YDOT) Passive Vehicle	XXX.XX nmi XXXX.X ft/s XXXX.X ft/s

PRO

Flashing V06N81	Delta V at TIG (CDH) in Local Vertical Coordinates	X Y Z	XXXX.X ft/s XXXX.X ft/s XXXX.X ft/s

PRO If Final flag is reset go to previous Flashing V16N45.

Flashing V16N45	Mark Counter (VHF–Optics) TFI (CDH) MGA	XXbXX XXbXX min/s XXX.XX deg

MGA will be the MGA at TIG (CDH). If the IMU is not aligned, MGA will be -00002. (For LM solution (P73) MGA is always -00002 on the final pass.)

PRO

If MINKEY controller is active, W-matrix reinitialization is performed and the appropriate burn program is initiated.

If Delta V solution <7 ft/s, P41 is initiated.
If Delta V solution ≥ 7 ft/s, P40 is initiated.

Flashing
V37 Select New Program (manual sequence)

P34—CSM TRANSFER PHASE INITIATION (TPI) TARGETING PROGRAM

Purpose:

1. To calculate the required Delta V and other initial conditions required by the AGC for execution of the Transfer Phase Initiation maneuver. Given:
   a. TIG (TPI) or the Elevation angle (E) of the CSM/LM LOS at TIG (TPI).
   b. Central angle of transfer (CENTANG) from TIG (TPI) to intercept time (TIG(TPF)).
2. To calculate TIG (TPI) given E or E given TIG (TPI).
3. To store the TPI target parameters for use by the desired thrusting program.

Assumptions:

1. The program must be done over a tracking station for real-time ground participation in AGC data input and output.
2. If P20 is in operation while this program is operating, the astronaut may hold at any flashing display and take optics marks, and/or he may allow VHF ranging marks to accumulate.
3. Once the parameters required for computation of the maneuver have been completely specified, the value of the active vehicle central angle of transfer is computed and stored. This number will be available for display to the astronaut through the use of V06 N52.

   The astronaut would call this display to verify that the central angle of transfer of the active vehicle is not within 170 to 190 degrees. If the angle is within this zone the astronaut should reassess the input targeting parameters based upon Delta V and expected maneuver time.
4. When determining the initial position and velocity of the target at intercept time, either conic or precision integration may be used. The time difference for computation is approximately 10:1 (that is, conic integration is 10 times faster than precision integration).
5. ISS need not be on to complete this program unless automatic state vector updating is desired by the Universal Tracking program.
6. The external Delta V flag is reset during this program to designate to the thrusting program that Lambert steering is to be used.
7. The Delta V in LOS coordinates is available in N59.
8. This program may be selected manually or internally by the MINKEY controller.

P34 (continued)

Sequence of Events:

If entered automatically by MINKEY controller, go to MANEUVER.

V37E34E

Note: If P20 rendezvous option is not running, P20 Option 0 is activated now.

Flashing V50N25	MINKEY Rendezvous Option Checklist Code	00017

PRO Elects MINKEY automatic rendezvous sequencing.
ENTER Elects manual sequencing.

MANEUVER

If the tracking attitude error between the vehicle pointing axis and the LOS to the LM is less than 10 degrees (computed by P20/R61), go to TARGETING.

Flashing V50N18	Desired FDAI angles for Automaneuver	OG(R)	XXX.XX deg
		IG(P)	XXX.XX deg
		MG(Y)	XXX.XX deg

PRO

V06N18	Maneuver in Progress

If MINKEY sequence, go to TARGETING when maneuver is complete.

Flashing V50N18	Maneuver Complete (manual sequence)

ENTER Terminates automaneuver routine. Go to TARGETING.

Note: P20 (R61) will maintain tracking attitude computations. If the attitude error becomes greater than 10 degrees, the astronaut will be alerted by:
UPLINK ACTY light ON

V58E

Request automaneuver execution. Go to MANEUVER.

TARGETING

Flashing V06N37	GET of TPI Ignition TIG (TPI)	00XXX h 000XX min 0XX.XX s

V25E to correct desired TIG.

PRO

Flashing V06N55	Number of Precision Offsets	0000X
	Elevation Angle	XXX.XX deg
	CENTANG	XXX.XX deg

V25E to load desired data.

Number of precision offsets is an integration code where X = 0 specifies integration of a conic trajectory to generate the target vector and X ≠ 0 specifies precision integration to generate the target vector. If precision integration is desired, X should equal 2.

Elevation angle is the angle between the CSM/LM LOS and the CSM local horizontal at TIG (TPI). E should = +00000 if E is to be computed at TIG specified. (For LM solution (P74) the angle is between the LM/CSM LOS and the LM local horizontal.)

CENTANG is the orbital angle traversed by the passive vehicle from TIG (TPI) to time of intercept.

PRO

Flashing V16N45	Mark Counter (VHF–Optics)	XXbXX
	TFI (TPI)	XXbXX min/s
	MGA at TIG (TPI)	-00001

Mark counter is updated by P20 which may be running in the background.

MGA is -1 until the final pass of the program.

PRO Set Final flag. V32E continues in program but Final flag is not set. Used when another pass is desired.

P34 (continued)

COMPUTE ELEVATION ANGLE FOR GIVEN TIG.
If elevation angle above was = 0,

Flashing V06N55	Same as N55 above, except elevation angle has been computed.	

COMPUTE TIG FOR GIVEN ELEVATION ANGLE. If elevation angle above was ≠ 0,

Flashing V06N37	Time of Ignition for Specified Elevation Angle TIG (TPI)	00XXX h 000XX min 0XX.XX s

If MINKEY FINAL PASS, set E = 0 and go to COMPUTE ELEVATION ANGLE FOR GIVEN TIG above.

Note: If alarm 00611 occurs, PRO to TARGETING at start of program.

PRO

Flashing V06N58	Pericenter Altitude (Post-TPI)	...XX.X nmi
	Delta V Required for TPI	XXXX.X ft/s
	Delta V Required for TPF	XXXX.X ft/s

PRO

Flashing V06N81	Delta V at TIG (TPI) in Local Vertical Coordinates	X XXXX.X ft/s Y XXXX.X ft/s Z XXXX.X ft/s

PRO If Final flag is reset, go to previous Flashing V16N45.

Flashing V16N45	Mark Counter (VHF–Optics)	XXbXX
	TFI (TPI)	XXbXX min/s
	MGA	XXX.XX deg

MGA will be the expected MGA at TIG (TPI). If the IMU is not aligned, MGA will be -00002. (For LM solution (P74), MGA is always -00002 on the final pass.)

PRO

If MINKEY controller is active, W-matrix reinitialization is performed and the appropriate burn program is initiated.

If Delta V solution $<$7 ft/s, P41 is initiated.
If Delta V solution $\geq$7 ft/s, P40 is initiated.

Flashing V37	Select New Program (manual sequence)

P35–CSM TRANSFER PHASE MIDCOURSE (TPM) TARGETING PROGRAM

Purpose:

1. To calculate the required Delta V and other initial conditions required by the AGC for CSM execution of the next midcourse correction of the transfer phase of an active CSM rendezvous.

Assumptions:

1. If P20 is in operation while this program is operating, the astronaut may hold at any flashing display and take optics marks, and/or he may allow VHF ranging marks to accumulate.
2. Once the parameters required for computation of the maneuver have been completely specified, the value of the active vehicle central angle of transfer is computed and stored. This number will be available for display to the astronaut through the use of V06 N52.

   The astronaut would call this display to verify that the central angle of transfer of the active vehicle is not within 170 to 190 degrees. If the angle is within this zone, the astronaut should reassess the input targeting parameters based upon Delta V and the expected maneuver time.
3. The time of intercept (T(INT) was defined by previous completion of the Transfer Phase Initiation (TP) program (P-34) and is presently available in AGC storage.
4. ISS need not be on to complete this program unless automatic state vector updating is desired by the Universal Tracking program.
5. The external Delta V flag is reset during this program to designate to the thrusting program that Lambert steering is to be used.
6. The Delta V in LOS coordinates is available in N59.
7. The program may be selected manually or internally by the MINKEY controller.

Sequence of Events:

If entered automatically by MINKEY controller, go to MANEUVER.

V37E35E

Note: If P20 rendezvous option is not running, P20 Option 0 is activated now.

Flashing V50N25	MINKEY Rendezvous Option Checklist Code	00017

PRO Elects MINKEY automatic rendezvous sequencing.
ENTER Elects manual sequencing.
MANEUVER

If the tracking attitude error between the vehicle pointing axis and the LOS to the LM is less than 10 degrees (computed by P20/R61), go to TARGETING.

Flashing V50N18	Desired FDAI angles for Automaneuver	OG(R)	XXX.XX deg
		IG(P)	XXX.XX deg
		MG(Y)	XXX.XX deg

P35 (continued)

PRO

V06N18 Maneuver in Progress

If MINKEY sequence, go to TARGETING when maneuver is complete.

Flashing
V50N18 Maneuver Complete (manual sequence)

ENTER Terminates automaneuver routine. Go to TARGETING.

Note: P20 (R61) will maintain tracking attitude computations. If the attitude error becomes greater than 10 degrees, the astronaut will be alerted by: UPLINK ACTY light ON

V58E

Request automaneuver execution. Go to MANEUVER.

TARGETING

Flashing	Mark Counters (VHF–Optics)		XXbXX
V16N45	TFI (TPM)		XXbXX min/s
	MGA		·00001

Mark counter is updated by P20, which may be running in the background. MGA is -1 until the final pass through program.

PRO Set Final flag, V32E continues but Final flag is not set. Used when another pass is desired.

Flashing	Delta V at TIG (TPM)	X	XXXX.X ft/s
V06N81	in Local Vertical Coordinates	Y	XXXX.X ft/s
		Z	XXXX.X ft/s

PRO If Final flag is reset, go to previous Flashing V16N45.

Flashing	Mark Counter (VHF–Optics)	XXbXX
V16N45	TFI (TPM)	XXbXX min/s
	MGA	XXX.XX deg

MGA will be expected MGA at TIG (TPI). If the IMU is not aligned, MGA will be -00002. (For LM solution (P75) MGA is always -00002 on the final pass.)

PRO

If MINKEY controller is active, W-matrix reinitialization is performed and the appropriate burn program is initiated.

If Delta V solution $<$ 7 ft/s, P41 is initiated.
If Delta V solution $\geq$ 7 ft/s, P40 is initiated.

Flashing
V37 Select New Program (manual sequence)

P36-PLANE CHANGE TARGETING (PC) PROGRAM

Purpose:

1. To calculate parameters associated with the plane change (PC) maneuver for Delta V burns.
2. To store the PC target parameters for use by the desired thrusting program.

Assumptions:

1. This program assumes a stored TIG (CSI) by completion of the Coelliptic Sequence Initiation (CSI) program (P32), an uplinked TIG (CSI) or crew loaded TIG (CSI) in N11.
2. If P20 is in operation while this program is in operation, the astronaut may hold at any flashing display and take optics marks, and/or he may allow VHF ranging marks to accumulate.
3. The ISS need not be on to complete this progam unless automatic state vector updating is desired by the Universal Tracking program (P20).
4. This program is normally used to target a plane chane burn between CSI and CDH at the midpoint (90 degrees central angle after TIG (CSI)).
5. The external Delta V flag is set during this program to designate to the thrusting program that external Delta V steering is to be used.
6. This program may be selected manually or internally by the MINKEY controller.

Sequence of Events:

If entered automatically by MINKEY controller, go to MANEUVER.

V37E36E

Note: If P20 rendezvous option is not running, P20 option 0 is activated now.

Flashing	MINKEY Rendezvous Option	
V50N25	Checklist Code	00017

PRO Elects MINKEY automatic rendezvous sequencing.
ENTER Elects manual sequencing.

MANEUVER

If the tracking attitude error between the vehicle pointing axis and the LOS to the LM is less than 10 degrees (computed by P20/R61), go to TARGETING.

Flashing	Desired FDAI angles for	OG(R)	XXX.XX deg
V50N18	Automaneuver	IG(P)	XXX.XX deg
		MG(Y)	XXX.XX deg

PRO

V06N18 Maneuver in Progress

If MINKEY sequence, go to TARGETING when maneuver is completed.

Flashing	
V50N18	Maneuver Complete (Manual Sequence)

P36 (continued)

ENTER Terminates automaneuver. Go to TARGETING.

Note: P20 (R61) will maintain tracking attitude computations. If the attitude error becomes greater than 10 degrees, the astronaut will be alerted by: UPLINK ACTY Light On

V58E

Request automaneuver execution. Go to MANEUVER.

TARGETING

Flashing V06N33	GET of PC Ignition TIG (PC)	00XXX h 000XX min 0XX.XX s

V25E to modify TIG.

PRO

Flashing V16N45	Mark Counter (VHF-Optics)	XXbXX
	Time From Ignition TFI (PC)	XXbXX min/s
	MGA	-00001

Mark Counter is updated by P20 which may be running in the background.
MGA is only displayed on the final pass.

PRO Sets Final flag.

V32E Continues in program but Final flag is not set. Used when another pass is desired.

Flashing V06N90	Out-of-Plane Position (Y) CSM	XXX.XX nmi
	Out-of-Plane Velocity (YDOT) CSM	XXXX.X ft/s
	Out-of-Plane Velocity (YDOT) LM	XXXX.X ft/s

PRO

Flashing V06N81	Delta V at TIG (PC) In Local Vertical Coordinates	X	XXXX.X ft/s
		Y	XXXX.X ft/s
		Z	XXXX.X ft/s

V25E to modify Delta V.

PRO If Final flag is reset, go to previous Flashing V16N45.

Flashing V16N45	Mark Counter (VHF-Optics)	XXbXX
	TFI (PC)	XXbXX min/s
	MGA	XXX.XX deg

MGA will be the MGA at TIG (PC). If the IMU is not aligned, MGA will be -00002.

PRO If Manual Sequence, go to Flashing V37.
If MINKEY controller is active, W-matrix reinitialization is performed and Delta V (N81) magnitude is tested:

If DV magnitude = 0, MINKEY initiates P76

If DV magnitude $>$ 0, MINKEY initiates P52 for possible realignment to new orientation to avoid gimbal lock for +X-axis burn. Go to P52 (PC Realign).

Note: Crew may elect to perform a Y-axis RCS burn, if the Delta V is small, to bypass realigning the IMU. This option is available in P52 (PC Realign). If the IMU is reoriented for a PC maneuver, it is returned to its original orientation by P52 as controlled by the MINKEY sequencer.

Flashing V37	Select New Program (manual sequence)

P37-RETURN TO EARTH

Purpose:

1. This program will compute a return-to-earth trajectory providing the CSM is outside the lunar sphere of influence at the time of ignition.
2. This program computes and displays a preliminary series of parameters based on a conic trajectory and:
   a. Astronaut specified time of ignition.
   b. Astronaut specified maximum change in velocity.
   c. Astronaut specified reentry angle.

   These parameters are:
   a. Time from ignition to reentry.
   b. Reentry inertial velocity.
   c. Reentry flight path angle.
   d. Latitude of splash.
   e. Longitude of splash.
   f. Delta V (LV).
3. When the initial display is satisfactory to the astronaut, the program recomputes the same data, using applicable perturbations to the conic trajectory, and displays the new values.
4. Upon final acceptance by the astronaut, the program computes and stores the target parameters for return to earth for use by the SPS program (P40) or RCS program (P41).
5. Based upon the specified propulsion system the following are displayed:
   a. Middle gimbal angle at ignition (MGA).
   b. Time of ignition (TIG).
   c. Time from ignition (TFI).

Assumptions:

1. This program assumes that contact with the ground is unavailable, and is completely self-contained.
2. If value of VPRED entered in Noun 60 is less than the minimum required to return to earth, the Delta V required vector will be computed based on a minimum value. If the value entered is greater than the minimum required to return to earth, then the astronaut desired value will be used to compute the Delta V required vector. The computed Delta V required vector will be displayed in Noun 81.
3. The DAP Data Load routine (R03) should be performed prior to completion of this program.
4. The reentry range calculation provided by the AUGE KUGEL routine may be over-written by a pad loaded single precision erasable.
5. The external Delta V flag is reset during this program to designate to the thrusting program that Lambert steering is to be used.

P37 (continued)

Sequence of Events:

V37E37E

Flashing V06N33	GET of RTE Ignition TIG (RTE)	00XXX h 000XX min 0XX.XX s

V25E to load desired TIG.

PRO

Flashing V06N60	Blank VPRED GAMMA EI	——— XXXXX. ft/s XXX.XX deg

V25E to load desired data.

VPRED is the maximum allowable velocity change for RTE. Zero is entered to compute the minmum ΔV to conserve fuel. See Assumption 2. GAMMA EI is the desired flight path angle between the inertial velocity vector and the local horizontal at Entry Interface (EI) altitude of 400,000 ft.

PRO

Flashing V06N61	Impact Latitude Impact Longitude	XXX.XX deg (+ north) XXX.XX deg (+ east)

To change the desired landing site longitude the maximum velocity change (VPRED) input is adjusted. The AGC-calculated minimum Vg is available by keying V06N40 (R2). Increasing this value and entering it ($\pm$) into VPRED will move the longitude (-) west or (+) east. To adjust input parameters, key V32E and recycle to V06N33.

PRO

Flashing V06N39	Transfer Time from TIG (RTE) to EI	00XXX h 000XX min 0XX.XX s

To change transfer time. V32E to recycle to V06N33 and readjust input parameters.

PRO

Flashing V06N60	Blank VPRED GAMMA EI	——— XXXXX ft/s XXX.XX deg

VPRED is the predicted inertial velocity at Entry Interface (EI).

PRO V32 to recycle to V06N33

Flashing V06N81	Delta V at TIG (RTE) in Local Vertical Coordinates	XXXX.X ft/s XXXX.X ft/s XXXX.X ft/s

PRO If first pass through program recycle to Flashing V06N61.

Flashing V04N06	Option Code (specify propulsion system) Propulsion Code (1—SPS, 2—RCS)	00007 0000X

V22E to load desired option.

PRO

Flashing V06N33	GET of RTE Ignition TIG (RTE)	00XXX h 000XX min 0XX.XX s

PRO

Flashing V16N45	Mark Counter (VHF—Optics) TFI (RTE) MGA	Not meaningful XXbXX min/s XXX.XX deg

MGA will be the middle gimbal angle at TIG or -00002 if the IMU is not aligned.

PRO

Flashing V37	Select New Program.

P40—SPS PROGRAM

Purpose:

1. To compute a preferred IMU orientation and a preferred vehicle attitude for an SPS thrusting maneuver and to maneuver the vehicle to the thrusting attitude.
2. To calculate and display the gimbal angles which would result from the present IMU orienration if the vehicle were maneuvered to the preferred vehicle attitude for an SPS thrusting maneuver. The crew is thereby given an opportunity to perform the maneuver with:
   a. The present IMU orientation (not recommended if middle gimbal angle is greater than 45 degrees). If the IMU has not been aligned within the last 3 hours, realignment is desirable.
   b. A new orientation achieved by selection of P52.
3. To control the GNCS during countdown, ignition, thrusting, and thrust termination of a GNCS controlled SPS maneuver.

Assumptions:

1. The target parameters have been calculated and stored in the AGC by prior execution of a prethrusting program.
2. The required steering equations are identified by the prior prethrust program, which either set or reset the external Delta V steering flag. For external Delta V steering, VG is calculated once for the specified time of ignition. Thereafter, both during thrusting and until the crew notifies the AGC trim thrusting has been completed, the AGC updates VG only as a result of compensated accelerometer inputs.

   For Lambert steering, VG is calculated and updated similarly; however, it is also updated periodically by Lambert solutions to correct for changes in the CSM state vector.
3. The TTE clock is set to count to zero at TIG.
4. Engine ignition may be slipped beyond the established TIG if desired by the crew or if integration can not be completed on time.
5. The SPS thrusting program does not monitor the SC control discrete (Channel 31, Bit 15) during thrusting. This means that the AGC will continue to generate engine actuator commands, SPS Engine On discrete, and FDAI attitude error needle commands until the AGC solution indicates Engine Off at which time these commands and the Engine On discrete are terminated. However, this program is not written to take into account the situation where control may be taken away from the GNCS and then given back, and it is not recommended. In event control is taken away from the GNCS, the AGC will only be responsible for computation of position and velocity.
6. The value of Delta V required will be stored in the local vertical coordinate system and is available during this program until average g turn-on by keying in V06 N81E.
7. The Orbit Parameter Display routine (R30) may be called during this program by keying in V82E.
8. This program may be selected manually or internally by the MINKEY controller.

Sequence of Events:

If entered automatically by MINKEY controller, go to Flashing V50N18.

Maneuver to pad burn attitude and check SXT and boresight stars using optics angles on pad.

V37E40E

Flashing V50N18	Desired FDAI Angles for Automaneuver	OG(R)	XXX.XX deg
		IG(P)	XXX.XX deg
		MG(Y)	XXX.XX deg

Request maneuver to computed burn attitude.

P40 (continued)

PRO

V06N18 Same as N18 above.

Maneuver is in process; final FDAI angles displayed.

Flashing Same as N18 above.
V50N18 Automaneuver is completed.

SCS-GDC aligned to IMU for backup attitude reference.
SPS gimbal drive motors energized.
S/C Control to SCS; SPS servo check and manual drive check performed.
S/C Control to CMC.

PRO

Flashing Same as N18 above.
V50N18 Vehicle is trimmed to burn attitude.

ENTER

Flashing Gimbal Slew Test Option.
V50N25 Checklist Code 00204

PRO Slews SPS gimbal ±2 degrees; ENTER — Bypasses gimbal slew test.

SPS gimbals commanded to trim angles (P, Y)

V06N40 Time from Ignition/Cutoff (TFI) XXbXX min/s
Velocity to be Gained (Vg) XXXX.X ft/s
Accumulated Velocity (ΔV) XXXX.X ft/s

DSKY blanks at TIG - 35 seconds, and V06N40 resumes at TIG -30 seconds.

Average G on.

Ullage initiated with THC if required.

Flashing Same as N40 above at TIG -5 seconds.
V99N40 Astronaut approval of ignition requested.

PRO Ignition approved.

V06N40 Same as N40 above.

Ignition at TIG.
TVC DAP activated.
SPS engine cutoff; burn complete.
TVC DAP off.

Flashing Same as N40 above.
V16N40

PRO

Flashing Vg Residuals in Control X XXXX.X ft/s
V16N85 System (body) Coordinates Y XXXX.X ft/s
Z XXXX.X ft/s

TRIM Vg residuals with THC if required.

PRO If MINKEY controller is active, P76 is entered.

Flashing
V37 (Manual Sequence)

V82E Request orbital parameter display.

Flashing Apocenter Altitude, Ha XXXX.X nmi
V16N44 Pericenter Altitude, Hp XXXX.X nmi
TFF XXbXX min/s

PRO

Flashing Select New Program.
V37

Average G off.

P41—RCS PROGRAM

Purpose:

1. Compute a preferred IMU orientation and preferred vehicle attitude for an RCS thrusting maneuver and to maneuver the vehicle to the thrusting attitude.
2. Calculate the gimbal angles which would result from the present IMU orientation if the vehicle +X axis were aligned to the thrust vector. The crew is thereby given an opportunity to perform the maneuver with:
   a. The present IMU orientation (not recommended if middle gimbal angle is greater than 45 degrees). If the IMU has not been aligned within the last 3 hours, realignment is desirable.
   b. A new orientation achieved by selection of P52.
3. Provide suitable displays for manual execution of the thrusting maneuver.

Assumptions:

1. The target parameters have been calculated and stored in the AGC by prior execution of a prethrusting program.
2. The required steering equations are identified by the prior prethrust program, which either set or reset the external Delta V steering flag. For external Delta V steering, VG is calculated once for the specified time of ignition. Thereafter, both during thrusting and until the crew notifies the AGC trim thrusting has been completed, the AGC updates VG only as a result of compensated accelerometer inputs.

   For Lambert steering, VG is calculated and updated similarly. However, it is also updated periodically by Lambert solutions to correct for changes in the CSM state vector.
3. The TTE clock is set to count to zero at TIG.
4. Translation initiation may be slipped beyond the established TIG if desired by the crew or if integration cannot be completed on time.
5. The value of Delta V required will be stored in the local vertical coordinate system and is available during this program until Average G turn-on by keying in V06 N81E.
6. The Orbit Parameter Display routine (R30) may be called during this program by keying in V82E.
7. This program may be selected manually or internally by the MINKEY controller.

Sequence of Events:

If entered automatically by MINKEY controller, go to Flashing V50N18. Maneuver to pad burn attitude and check SXT and boresight stars using optics angles on pad.

V37E41E

Flashing V50N18	Desired FDAI Angles	OG(R)	XXX.XX deg
		IG(P)	XXX.XX deg
		MG(Y)	XXX.XX deg

Request maneuver to computed burn attitude.

PRO

V06N18	Same as N18 above.		

Automaneuver in process; final FDAI angles displayed.

Flashing V50N18	Same as N18 above. Maneuver is complete.		

ENTER

V16N85	Velocity to be Gained in Control System (body) Coordinates (Vg)	X	XXXX.X ft/s
		Y	XXXX.X ft/s
		Z	XXXX.X ft/s

DSKY blanks at TIG -35 seconds and resumes display at TIG -30 seconds.
Average G on at TIG -30 seconds.

Flashing V16N85	Flash signifies TIG has arrived. Same as N85 above.

Null Vg with THC at TIG.

P41 (continued)

PRO If MINKEY controller is active, P76 is entered.

Flashing V37	(Manual Sequence)	
V82E Request Orbital Parameter display.		
Flashing V16N44	Apocenter Altitude Pericenter Altitude TFF	XXXX.X ft/s XXXX.X ft/s XXbXX min/s

PRO

Flashing V37	Select New Program.

Average G off.

P47—THRUST MONITOR PROGRAM

Purpose:

1. To monitor vehicle acceleration during a non-GNCS-controlled thrusting maneuver.
2. To display the Delta V applied to the vehicle by this thrusting maneuver.

Assumptions:

1. This program is normally used during rendezvous final phase. If the crew desires to do any final phase thrusting maneuvers automatically under GNCS control, they must be accomplished via selection of the Transfer Phase Initiation (TPI) program (P34) and then the SPS Thrusting program (P40) or the RCS Thrusting program (P41).
2. Range, Range Rate, and Theta may be displayed during this program by calling the Rendezvous Parameter Display routine No. 1 (R31) with V83E.
3. Range, Range Rate, and Phi may be displayed during this program by calling the Rendezvous Parameter Display routine No. 2 (R34) with V85E.
4. V1, H, and H-dot may be called by keying in V16 N62E.
5. The Orbit Parameter Display routine may be called during this program by keying in V82E.
6. This program should be turned on just prior to the planned thrusting maneuver and terminated as soon as possible following the maneuver in order to keep errors of bias and AVERAGE G at a minimum.

Sequence of Events:

V37E47E

Flashing V16N83	Delta V Accumulated in Control Coordinate System	X Y Z	XXXX.X ft/s XXXX.X ft/s XXXX.X ft/s

Display of integrated acceleration during thrusting.

OPTIONAL DISPLAYS

V16N62E Crew Optional Display

V16N62	Magnitude of Inertial Velocity (V1) Rate of Change of Altitude (HDOT) Altitude Above Pad Radius (H)	XXXXX. ft/s XXXXX. ft/s XXXX.X nmi

P47 (continued)

KEY REL

Flashing V16N83	Same as N83 above.	

V83E Rendezvous parameter display at crew option.

Flashing V16N54	Range of CSM to LM Range Rate Angle Between CSM +X Axis and Local Horizontal (Theta)	XXX.XX nmi XXXX.X ft/s XXX.XX deg

PRO

V85E Rendezvous parameter display at crew option.

Flashing V16N53	Range of CSM to LM Range Rate Angle Between Optics SLOS and the Local Horizontal (PHI)	XXX.XX nmi XXXX.X ft/s XXX.XX deg

PRO

V82E Orbital parameter display.

Flashing V16N44	Apocenter Altitude Pericenter Altitude TFF	XXXX.X nmi XXXX.X nmi XXbXX min/s

PRO

Flashing V16N83	Same as N83 above.	

PRO

Flashing V37	Select New Program.	

Average G off.

P51-IMU ORIENTATION DETERMINATION PROGRAM

Purpose:

1. To determine the inertial orientation of the IMU using sightings on two celestial bodies using the scanning telescope or the sextant.

Assumptions:

1. Time and RCS fuel may be saved, and subsequent IMU alignment decisions greatly simplified if this program is performed in such a way as to leave the IMU inertially stabilized at an orientation as close as possible to the optimum orientation required by future AGC programs.

P51 (continued)

Sequence of Events:

V37E51E

	Flashing V50N25	Checklist Code Perform Celestial Body Acquisition	00015

ENTER To Bypass Coarse Align PRO to Flashing V51.

	Flashing V41N22	Desired Gimbal Angles to Coarse Align to	OG 000.00 deg IG 000.00 deg MG 000.00 deg

No Att light on.
No Att light off when coarse align complete.

Flashing V51	Request mark.

ZERO OPTICS for 15 seconds.

OPTICS Mode — Manual

MARK

Flashing V50N25	Checklist Code Request terminate mark sequence.	00016

MARK REJECT and recycle to Flashing V51 if not satisfactory.

PRO

Flashing V01N71	Celestial Body Code 00—planet, 01/45—star, 46—sun, 47—earth, 50—moon	000XX

V21E load correct star code.

PRO If Star Code ≠ 0 and first mark, recycle to Flashing V51.
If Star Code ≠ 0 and second mark, go to Flashing V06N05.

Flashing V06N88	Unit Vector Specifies Planet Position	X Y Z	.XXXXX .XXXXX .XXXXX

V25E to load planet vector.

PRO If first mark, recycle to Flashing V51.

Flashing V06N05	Star Angle Difference*	XXX.XX deg

PRO V32E to recycle to start of program.
REFSMMAT flag set.

Flashing V37	Select New Program.

*Acceptable N05 Limits

STAR/STAR	SXT	0.03°
	SCT	0.11°
STAR/PLANET	SXT	0.18°
	SCT	0.21°

P52—IMU REALIGN PROGRAM

Purpose:

1. To align the IMU from a "known" orientation to one of four orientations selected by the astronaut using sightings on two celestial bodies with the scanning telescope or the sextant:

   a. Preferred Orientation (00001)

      An optimum orientation for a previously calculated maneuver. This orientation must be calculated and stored by a previously selected program or previously uplinked via P27.

   b. Landing Site Orientation (00004)

      X_{SM} = Unit (R_{LS})

      Y_{SM} = Unit ($Z_{SM} \times X_{SM}$)

      Z_{SM} = Unit ($H_{CSM} \times X_{SM}$)

      where

      The origin is the center of the moon.

      R_{LS} = The position of the most recently defined landing site at time T(align) selected by the astronaut.

      H_{CSM} = The angular momentum vector of the CSM ($R_{CSM} \times V_{CSM}$) at time T (align) selected by the astronaut.

      The landing site option is used for aligning the CSM and LM stable members to the same orientation prior to LM/CSM separation and prior to LM ascent from the lunar surface.

   c. Nominal Orientation (00002)

      X_{SM} = Unit ($Y_{SM} \times Z_{SM}$)

      Y_{SM} = Unit ($V \times R$)

      Z_{SM} = Unit (-R)

      where

      R = The geocentric (earth orbit) or selenocentric (lunar orbit) radius vector at time T (align) selected by the astronaut.

      V = the inertial velocity vector at time T (align) selected by the astronaut.

   d. REFSMMAT (00003)

      The present IMU orientation differs from that to which it was last aligned due to gyro drift. This option realigns the IMU to its previous alignment orientation (REFSMMAT).

2. To align the IMU to a predetermined orientation suitable for a plane change (PC) maneuver and to realign the IMU after the maneuver to the pre-PC orientation.

   X_{SM} = Unit ($X_{SMO} \cos 45^{\circ} + Y_{SMO} \sin 45^{\circ}$) for first maneuver

   X_{SM} = Unit ($X_{SMO} \cos 45^{\circ} - Y_{SMO} \cos 45^{\circ}$) for second maneuver

   Y_{SM} = Unit ($Z_{SM} \times X_{SM}$)

   $Z_{SM} = Z_{SMO}$

   where subscript '0' refers to the orientation existing before the alignment.

Assumptions:

1. If the CMC Mode switch is in CMC-Attitude Hold during the Gyro Torquing routine (R55), the DAP will maneuver the vehicle to follow the platform.
2. An option is provided to point the sextant LOS at astronaut or AGC selected stars either manually by crew input or automatically under AGC control.
3. This program may be selected manually or internally by the MINKEY controller in conjunction with the plane change maneuver.

P52 (continued)

Sequence of Events:

If entered automatically by MINKEY controller, go to PC REALIGN.

V37E52

	Flashing	Option ID Code	00001
	V04N06	Alignment Option	0000X
		1—preferred, 2—nominal	
		3—REFSMMAT, 4—landing site	

V22E to key in desired alignment option.

PRO To appropriate option.

PC REALIGN

Flashing	Gimbal angles which will	OG	XXX.XX deg
V06N22	result from pulse torque to	IG	XXX.XX deg
	PC orientation	MG	XXX.XX deg

If MGA is not satisfactory, maneuver vehicle and V32E to recompute N22 angles.

PRO If N22 angles are satisfactory.

Flashing	MINKEY Pulse Torque Option	
V50N25	Checklist Code	00020

ENTER If this is first reorientation maneuver, the pulse torque to PC orientation is bypassed and MINKEY enters the RCS Burn program (P41). If this is the second reorientation maneuver, alarm 00402 is displayed. The platform must be torqued to its original orientation.

PRO Commence with pulse torquing.

V16N20	Present ICDU Angles	OG	XXX.XX deg
		IG	XXX.XX deg
		MG	XXX.XX deg

Upon completion of pulse torquing to new orientation, the MINKEY controller will initiate:

1. P41 if pre-plane change burn and if Delta V $\leq$ 7 ft/s
2. P40 if pre-plane change burn and if Delta V $\geqslant$ 7 ft/s
3. P33 if plane-change maneuver completed (second pulse torque)

LANDING SITE OPTION (00004)

Flashing	GET of Landing Site Coordinate	00XXX h
V06N34	System T(Align)	000XX min
		0XX.XX s

V25E to load desired T(Align).

PRO

Flashing	Latitude of Landing Site	XX.XXX deg (+ north)
V06N89	Longitude/2	XX.XXX deg (+ east)
	Altitude	XXX.XX nmi

V25E to load landing site coordinates.

PRO To Preferred Option

NOMINAL OPTION (00002)

Flashing	Same as N34 above, except GET of position and
V06N34	velocity vectors defining nominal coordinate system.

PRO To Preferred Option

PREFERRED OPTION (00001)

Flashing	Desired Gimbal Angles for New	OG	XXX.XX deg
V06N22	Orientation at Present Vehicle	IG	XXX.XX deg
	Attitude	MG	XXX.XX deg

If the new orientation yields gimbal lock, maneuver vehicle and V32E to recompute (N22) desired gimbal angles.

P52 (continued)

PRO

Flashing — Coarse Align Option
V50N25 — Checklist Code — 00013

CMC Mode Switch — FREE
(Avoids maneuvering vehicle) — Key in ENTER or PRO.

Gyro Torque Only

ENTER

Torques gyros to achieve new orientation (maintains attitude reference).

V16N20 — Monitor Gimbal Angles

OG	XXX.XX deg
IG	XXX.XX deg
MG	XXX.XX deg

Go to RECHECK when torquing is complete.

Coarse Align Only

PRO Coarse aligns gimbals to achieve new orientation (lose attitude reference).
No Att light ON until coarse align complete.
Go to REFSMMAT option when No Att light out.

REFSMMAT OPTION (00003)

Flashing
V50N25 — Checklist Code — 00015

Request Celestial Body acquisition.

PRO AGC will select two available stars. Use ENTER to specify crew selection of stars.

MARK SEQUENCE

Flashing
V01N70 — Star ID Code — 000XX

V21E to key in star code.

ZERO OPTICS for 15 seconds.

OPTICS Mode — CMC

PRO For Planet XX = 00; if XX ≠ 00, go to V06N92 display.

Flashing
V06N88 — Unit Vector Specifies Planet Position

X	.XXXXX
Y	.XXXXX
Z	.XXXXX

V22E to specify desired planet vector.

PRO

V06N92 — Desired Optics Angles

Shaft	XXX.XX deg
Trunnion	XX.XXX deg

CMC drives optics LOS to target.

OPTICS Mode — Manual

Flashing
V51 — Request Mark.

Mark on Target

Flashing
V50N25 — Checklist Code — 00016

Terminate Mark Sequence option.

P52 (continued)

PRO Marking was okay, if not MARK REJECT.

Flashing V01N71	Star ID Code of Body Marked On	00XX

V21EXXE if not correct.

PRO If Star Code ≠ 0 and first MARK, recycle to Mark sequence.
If Star Code ≠ 0 and second MARK, go to Flashing V06N05.

Flashing V06N88	Same as N88 above.	

V25E to correct planet vector.

PRO If first MARK recycle to MARK sequence.

Flashing V06N05	Star Angle Difference*	XXX.XX deg

If N05 not satisfactory, V32E, and go to RECHECK.

PRO

Flashing V06N93	Gyro Torque Angles to Fine Align	X Y Z	XX.XXX deg XX.XXX deg XX.XXX deg

CMC Mode Switch — Free (Avoids maneuvering vehicle when torquing gyros).

PRO Torque gyros. V32E to bypass gyro torquing.

RECHECK

Flashing V50N25	Checklist Code Fine Alignment Option	00014

PRO Recycles to REFSMMAT option for check on alignment.

ENTER

Flashing V37	Select New Program.

*Acceptable N05 Limits

STAR/STAR	SXT	0.03°
	SCT	0.11°
STAR/PLANET	SXT	0.18°
	SCT	0.21°

P53–BACKUP IMU ORIENTATION DETERMINATION PROGRAM

Purpose:

1. To determine the inertial orientation of the IMU using a backup optical device.

Assumptions:

1. This program is identical to P51 except that R56 is called in place of R53.
2. Time and RCS fuel may be saved and subsequent IMU alignment decisions greatly simplified if this program is performed in such a way as to leave the IMU inertially stabilized at an orientation as close as possible to the optimum orientation required by future AGC programs.

Sequence of Events:

V37E53E

Flashing V50N25	Check list Code Perform Celestial Body acquisition.	00015

ENTER To bypass coarse align, PRO to Flashing V06N94.

Flashing V41N22	Desired Gimbal Angles to Coarse Align to	OG IG MG	XXX.XX XXX.XX XXX.XX

No Att light on.
No Att light off when coarse align complete.

Flashing V06N94	Optics Angle Coordinates for Alternate LOS	Shaft Trunnion	XXX.XX deg XX.XXX deg

V24E to load LOS coordinates.

PRO

Flashing V53	Request Mark.

ENTER
Does alternate LOS mark.

Flashing V50N25	Check list Code Terminate Mark Sequence

00016

PRO Key ENTER to reject mark and recycle to Flashing V53.

Flashing V01N71	Celestial Body Code

00XX

V21E to load star code.

PRO If Star Code ≠ 0 and first mark, recycle to Flashing V06N94.
If Star Code ≠ 0 and second mark, go to Flashing V06N05.

Flashing V06N88	Unit Vector Specifies Planet Position	X Y Z	.XXXXX .XXXXX .XXXXX

V25E to load planet vector.

PRO If first mark, recycle to Flashing V06N94.

Flashing V06N05	Star Angle Difference*

XXX.XX deg

PRO V32E to recycle to start of program.

Set REFSMMAT flag.

Flashing V37	Select New Program.

*Acceptable N05 Limits

STAR/STAR	COAS	0.70°
STAR/PLANET	COAS	0.72°

P54–BACKUP IMU REALIGN PROGRAM

Purpose:

1. To align the IMU from a "known" orientation to one of four orientations selected by the astronaut using sightings on two celestial bodies with a backup optical device:

   a. Preferred Orientation (00001)

      An optimum orientation for a previously calculated maneuver. This orientation must be calculated and stored by a previously selected program or previously uplinked via P27.

   b. Landing Site Orientation (00004)

      X_{SM} = Unit (R_{LS})

      Y_{SM} = Unit (Z_{SM} x X_{SM})

      Z_{SM} = Unit (H_{CSM} x X_{SM})

      where

      The origin is the center of the moon.

      R_{LS} = The position of the most recently defined landing site at time T(align) selected by the astronaut.

      H_{CSM} = The angular momentum vector of the CSM (R_{CSM} x V_{CSM}) at time T (align) selected by the astronaut.

      The Landing Site option is used for aligning the CSM and LM stable members to the same orientation prior to LM/CSM separation and prior to LM ascent from the lunar surface.

   c. Nominal Orientation (00002)

      X_{SM} = Unit (Y_{SM} x Z_{SM})

      Y_{SM} = Unit (V x R)

      Z_{SM} = Unit (-R)

      where

      R = The geocentric (earth orbit) or selenocentric (lunar orbit) radius vector at time T (align) selected by the astronaut.

      V = The inertial velocity vector at time T (align) selected by the astronaut.

   d. REFSMMAT (00003)

      The present IMU orientation differs from that to which it was last aligned due to gyro drift. This option realigns the IMU to its previous alignment orientation (REFSMMAT).

Assumptions:

1. If the CMC Mode switch is in CMC-Attitude Hold during the Gyro Torquing routine (R55), the DAP will maneuver the vehicle to follow the platform.
2. This program is identical to P52 except that R56 is called in place of R52 and R53.

Sequence of Events:

V37E54E

Flashing	Option ID Code	00001
V04N06	Alignment Option 1–preferred, 2–nominal, 3–REFSMMAT, 4–landing site.	0000X

PRO To appropriate option.

P54 (continued)

LANDING SITE OPTION (00004)

Flashing V06N34 — GET of Landing Site Coordinate System T(Align) — 00XXX h, 000XX min, 0XX.XX s

V25E to load desired T(Align).

PRO

Flashing V06N89 — Latitude of Landing Site — XX.XXX deg (+ north)
Longitude/2 — XX.XXX deg (+ east)
Altitude — XXX.XX nmi

V25E to load landing site coordinates.

PRO To Preferred option.

NOMINAL OPTION (00002)

Flashing V06N34 — Same as N34 above except GET of position and velocity vectors defining nominal coordinate system.

PRO To Preferred option.

PREFERRED OPTION (00001)

Flashing V06N22 — Desired Gimbal Angles for New Orientation at Present Vehicle Attitude — OG XXX.XX deg, IG XXX.XX deg, MG XXX.XX deg

If the new orientation yields gimbal lock, maneuver vehicle and V32E to recompute (N22) desired gimbal angles.

PRO

Flashing V50N25 — Checklist Code — 00013
Coarse Align Option

CMC Mode switch — Free (avoids maneuvering vehicle). Key in ENTER or PRO

ENTER

Torques gyros to achieve new orientation (maintains attitude reference).

V16N20 — Monitor Gimbal Angles — OG XXX.XX deg, IG XXX.XX deg, MG XXX.XX deg

Go to RECHECK when torquing is complete.

PRO Coarse aligns gimbal to achieve new orientation (loses attitude reference).

No Att light - on.
No Att light - off when coarse align is complete, go to REFSMMAT option.

REFSMMAT OPTION (00003)

Flashing V50N25 — Checklist Code — 00015

Request Celestial Body acquisition.

PRO AGC will select two available stars. Use ENTER to specify crew selection of stars.

MARK SEQUENCE

Flashing V01N70 — Star ID Code — 000XX

V21E to load star code.

P54 (continued)

PRO If Star Code ≠ 0, go to Flashing V06N94.

Flashing V06N88	Unit Vector Specifies Planet Position	X	.XXXXX
		Y	.XXXXX
		Z	.XXXXX

V25E to load desired planet vector.

PRO

Flashing V06N94	Optics Angles for Alternate LOS	Shaft	XXX.XX deg
		Trunnion	XX.XXX deg

V24E to load LOS coordinates..

PRO

Flashing V53	Request Mark

ENTER

Does alternate LOS mark.

Flashing V50N25	Checklist Code	00016
	Terminate Mark Sequence	

PRO Key ENTER to reject MARK and recycle to Flashing V53.

Flashing V01N71	Celestial Body Code of Body Marked On	000XX

V21E to correct star code.

PRO If Star Code ≠ 0 and first mark, recycle to Mark Sequence.
If Star Code ≠ 0 and second mark, go to Flashing V06N05

Flashing V06N88	Same as N88 above.

V25E to correct planet vector.

PRO If first mark, recycle to Mark Sequence.

Flashing V06N05	Star Angle Difference*	XXX.XX deg

PRO If N05 unsatisfactory, V32E and go to RECHECK.

Flashing V06N93	Gyro Torque Angles to Fine Align	X	XX.XXX deg
		Y	XX.XXX deg
		Z	XX.XXX deg

CMC Mode Switch — Free

(Avoids maneuvering vehicle when torquing gyros.)

PRO Torques gyros. (V32E to bypass gyro torquing.)

RECHECK

Flashing V50N25	Checklist Code	00014
	Fine Alignment Option	

PRO Recycles to REFSMMAT option for check on alignment.

ENTER

Terminate Program

Flashing V37	Select New Program

*Acceptable N05 Limits

STAR/STAR	COAS	0.70°
STAR/PLANET	COAS	0.72°

P61—ENTRY—PREPARATION PROGRAM

Purpose:

1. To start navigation, check IMU alignment, and provide entry monitor system initialization data.

Assumptions:

1. The program is entered with adequate freefall time to complete the maneuvers from a worst case starting attitude.
2. The ISS is on and precisely aligned to a satisfactory orientation.

Sequence of Events:

V37E61E

Average G On

Flashing V06N61	Impact Latitude	XXX.XX deg
	Impact Longitude	XXX.XX deg
	Roll Attitude Code	±0000X
	X = +1 — heads up/lift vector down	
	X = -1 — heads down/lift vector up (normal)	

V25E to load entry data.

PRO

Flashing V06N60	G Max	XXX.XX g
	VPRED	XXXXX. ft/s
	GAMMA EI	XXX.XX deg

GMAX is the maximum predicted acceleration for ENTRY at nominal bank angle (L/D ratio = 0.18). VPRED is the predicted inertialvelocity at Entry Interface (EI) altitude of 400 k ft. GAMMA EI is the flight path angle between the inertial velocity vector and the local horizontal at EI altitude of 400 k ft.

PRO

Flashing V16N63	RTOGO	XXXX.X nmi
	VIO	XXXXX. ft/s
	TFE	XXbXX min/s

RTOGO is the range to go from a preloaded altitude of 297,432 feet to splash. This is approximately 0.05 g altitude. VIO is the predicted velocity at 297,431 feet. TFE is the time until 297,431-foot altitude is reached.

RTOGO and VIO may be used for EMS initialization if pad values not available.

PRO

AGC advances to P62.

P62–ENTRY–CM/SM SEPARATION AND PREENTRY MANEUVER PROGRAM

Purpose:

1. To notify crew when the GNCS is prepared for CM/SM separation.
2. To orient the CM to the correct attitude for atmospheric entry.

Assumptions:

1. The program is entered with adequate freefall time to accomplish CM/SM separation and complete the maneuver from a worst case starting attitude.
2. The IMU is satisfactorily aligned for entry.
3. The program is automatically selected by the Entry–Preparation program (P61) or it may be selected manually.
4. The astronaut may monitor N63 (RTOGO, VIO, TFE) by keying in V16 N63 E.

Sequence of Events:

V37E62E

If entered manually; normally entered automatically from P61.

Average G on. Normally on from P61.

Flashing V50N25	Checklist Code	00041

Perform CM/SM separation.

Maneuver to Separation Attitude.
SC Control to SCS.
CM/SM Separation – On.
Maneuver to Horizon Track Attitude.

PRO

Entry DAP Activated

Flashing V06N61	Impact Latitude	XXX.XX deg
	Impact Longitude	XXX.XX deg
	Roll Attitude	±0000X

X = +1 – heads up/lift vector down
X = -1 – heads down/lift vector up (normal)

V25E to load desired data.

PRO If angle of attack of CM is within 45 degrees of desired, go to P63.

V06N22	Desired Gimbal Angles	OG(R)	XXX.XX deg
		IG(P)	XXX.XX deg
		MG(Y)	XXX.XX deg

Roll angle depends on heads up/down option. Pitch depends on the desired angle of attack into the atmosphere. When CM is within 45 degrees of desired advance to P63.

AGC Advances to P63.

P63–ENTRY–INITIALIZATION PROGRAM

Purpose:

1. To initialize the entry equations.
2. To continue to hold the CM to the correct attitude with respect to the atmosphere for the onset of entry deceleration.
3. To establish entry DSKY displays.
4. To sense 0.05 g and display this event to the crew by selecting the Entry–Post 0.05 g program (P64).

Assumptions:

1. The program is automatically selected by the Entry–CM/SM Separation and Preentry Maneuver program (P62).

Sequence of Events:

P63 entered automatically from P62.

V06N64	Drag Acceleration	XXX.XX g
	Inertial Velocity	XXXXX. ft/s
	Range to Splash	XXXX.X nmi
		(+ is overshoot)

This display may be monitored continuously by keying V16N64E.

OPTIONAL DISPLAYS

V16N68E

V16N68	Commanded Bank Angle (Beta)	XXX.XX deg
	Inertial Velocity (VI)	XXXXX. ft/s
	Altitude Rate of Change (HDOT)	XXXXX. ft/s

V16N63E

V16N63	Range from EMS Altitude (RTOGO)	XXXX.X nmi
	Inertial Velocity at EMS Altitude	XXXXX. ft/s
	Time to go Until EMS Altitude	XXbXX min/s

V16N74E

V16N74	Commanded Bank Angle (Beta)	XXX.XX deg
	Inertial Velocity	XXXXX. ft/s
	Drag Acceleration	XXX.XX g

Manual track of horizon reduces pitch error needle as pitch attitude approaches the desired angle of attack.

SC Control Switch - CMC/Auto.

Entry DAP now controlling vehicle attitude.

G&N system senses 0.05g drag acceleration.

AGC advanced to P64.

P64-ENTRY—POST 0.05 G PROGRAM

Purpose:

1. To start entry guidance at 0.05 g selecting roll attitude, constant drag level, and drag threshold, KA, which are keyed to the 0.05 g point.
2. Select final phase (P67) when 0.2 g occurs if V < 27,000 ft/s at 0.05 g.
3. Iterate for upcontrol solution (P65) if V> 27,000 ft/s and if altitude rate and drag level conditions are satisfied.
4. Select final phase (P67) if no upcontrol solution exists with VL > 18,000 ft/s.
5. To establish the 0.05 g mode in SCS.
6. To continue entry DSKY displays.

Assumptions:

1. The program is automatically selected by the Entry-Initialization program (P63).

Sequence of Events:

P64 entered automatically from P63 at 0.05 g.

V06N74	Commanded Bank Angle (Beta)	XXX.XX deg
	Inertial Velocity (VI)	XXXXX. ft/s
	Drag Acceleration (G)	XXX.XX g

OPTIONAL DISPLAYS

V16N64E

V16N64	Drag Acceleration (G)	XXX.XX g
	Inertial Velocity (VI)	XXXXX. ft/s
	Range to Splash (RTOTARG)	XXXX.X nmi

V16N68E

V16N68	Commanded Bank Angle (Beta)	XXX.XX deg
	Inertial Velocity (VI)	XXXXX. ft/s
	Altitude Rate (HDOT)	XXXXX. ft/s

AGC advances to P65 or P67.

If VI $\leq$ 27 k ft/s at 0.05 g, go to P67 when 0.2 g drag is sensed.
If VI $\geq$ 27 k ft/s, a constant drag trajectory is flown until HDOT becomes more positive than -700 ft/s. A range-to-go check will determine if a controlled skip (P65) phase should be entered. The entry is targeted nominally for a RTOGO at EI which will be too small to satisfy P65 requirements and P67 is entered at this point.

P65–ENTRY–UPCONTROL PROGRAM

Purpose:

1. To execute Entry–Upcontrol guidance which steers the CM to a controlled exit (skip out) condition.
2. To establish Entry–Upcontrol displays which are used in conjunction with the EMS to determine for the astronaut if the backup procedures should be implemented.
3. To sense exit (drag acceleration less than Q7 ft/s^2) and thereupon to select the Entry–Ballistic Phase program (P66).
4. Where HDOT is negative and the V is sufficiently low (V-VL-C18 neg), the program will exit directly to P67 (Final Phase).

Assumptions:

1. This program is automatically selected by the Entry–Post 0.05 g program (P64) when constant drag control has brought range prediction to within 25 nmi of the desired range. It is skipped in earth orbit missions.

Sequence of Events:

P65 entered automatically from P64.

Flashing V16N69	Commanded Bank Angle (Beta)	XXX.XX deg
	Drag Level at Skipout (OL)	XXX.XX g
	Skipout Velocity (VL)	XXXXX. ft/s

PRO Manual response to N69 is not necessary to terminate P65. Selection of P66 or P67 by entry guidance provides automatic termination.

V06N74	Commanded Bank Angle (Beta)	XXX.XX deg
	Inertial Velocity (VI)	XXXXX. ft/s
	Drag Acceleration (G)	XXX.XX g

OPTIONAL DISPLAYS

V16N64E

V16N64	Drag Acceleration (G)	XXX.XX g
	Inertial Velocity (VI)	XXXXX. ft/s
	Range-to-Splash (RTOTARG)	XXXX.X nmi

V16N68E

V16N68	Commanded Bank Angle (Beta)	XXX.XX deg
	Inertial Velocity (VI)	XXXXX. ft/s
	Altitude Rate (HDOT)	XXXXX. ft/s

AGC advances to P66 or P67.

P67 will be entered when HDOT is negative and the velocity is sufficiently low. P66 will be entered when exit is sensed.

P66-ENTRY–BALLISTIC PROGRAM

Purpose:

1. To maintain CM attitude during ballistic (skip out) phase for atmospheric reentry.
2. To sense reentry (drag acceleration builds up to Q7 + 0.5 ft/s^2 or approximately 0.2 g) and thereupon to select the Entry-Final Phase program (P67).

Assumptions:

1. This program is automatically selected by the Entry–Upcontrol program (P65) when drag acceleration becomes less than Q7 ft/s^2.

Sequence of Events:

P66 is entered automatically from P65.

V06N22	Desired Gimbal Angles	OG	XXX.XX deg
	to Orient the Vehicle to	IG	XXX.XX deg
	Correct Angle of Attack	MG	XXX.XX deg

Three-axis control of S/C is regained when acceleration falls below 0.05 g and is relinquished when the drag increases above this value.

OPTIONAL DISPLAYS

V16N64E

V16N64	Drag Acceleration (G)	XXX.XX g
	Inertial Velocity (VI)	XXXXX. ft/s
	Range to Splash (RTOTARG)	XXXX.X nmi

V16N68E

V16N68	Commanded Bank Angle (Beta)	XXX.XX deg
	Inertial Velocity (VI)	XXXXX. ft/s
	Altitude Rate (HDOT)	XXXXX. ft/s

V16N74E

V16N74	Commanded Bank Angle (Beta)	XXX.XX deg
	Inertial Velocity (VI)	XXXXX. ft/s
	Drag Acceleration (G)	XXX.XX g

AGC advances to P67.

P67 is entered at reentry or when approximately 0.2 g is sensed.

P67—ENTRY—FINAL PHASE PROGRAM

Purpose:

1. To continue entry guidance after Q7F + 0.5 ft/s^2 (or approximately 0.2 g) until termination of steering when the CM velocity WRT earth = 1,000 ft/s (altitude is approximately 65,000 ft).
2. To continue entry DSKY displays.

Assumptions:

1. The program is automatically selected by:
   a. P65 when HDOT is negative and the V is sufficiently low (V-VL-C18 neg).
   b. P66 when drag acceleration builds up to Q7F + 0.5 ft/s^2 (or approximately 0.2 g).
   c. P64 if no upcontrol solution exists with VL > 18,000 ft/s.

Sequence of Events:

P67 is entered automatically from P64, P65, or P66.

V06N66	Commanded Bank Angle (Beta)	XXX.XX deg
	Crossrange Error	XXXX.X nmi (+ south)
	Downrange Error	XXXX.X nmi (+ overshoot)

OPTIONAL DISPLAYS

V16N64E

V16N64	Drag Acceleration (G)	XXX.XX g
	Inertial Velocity (VI)	XXXXX. ft/s
	Range to Splash (RTOTARG)	XXXX.X nmi

V16N68E

V16N68	Commanded Bank Angle (Beta)	XXX.XX deg
	Inertial Velocity (VI)	XXXXX. ft/x
	Altitude Rate (HDOT)	XXXXX. ft/s

V16N74E

V16N74	Commanded Bank Angle (Beta)	XXX.XX deg
	Inertial Velocity (VI)	XXXXX. ft/s
	Drag Acceleration (G)	XXX.XX g

Relative velocity reaches 1,000 ft/s

Flashing	Range-to-Splash (RTOTARG)	XXXX.X nmi (+ overshoot)
V16N67	Present Latitude	XXX.XX deg (+ north)
	Present Longitude	XXX.XX deg (+ east)

SC Control — SCS

Prevent jet firings when Drogue chutes deploy.

PRO

Flashing	Select New Program.
V37	

Average G off.

P72--LM COELLIPTIC SEQUENCE INITIATION (CSI) PROGRAM

Purpose:

1. To calculate parameters associated with the following concentric flight plan maneuvers for LM execution of the maneuvers under the control of the LGC; the Coelliptic Sequence Initiation (CSI) and the Constant Delta Altitude maneuver (CDH).
2. To calculate these parameters based upon maneuver data approved and keyed into the AGC by the astronaut.
3. To display to the astronaut and the ground dependent variables associated with the concentric flight plan maneuvers for approval by the astronaut/ground.

Assumptions:

1. At a selected TPI time the line of sight between the LM and the CSM is selected to be a prescribed angle (E) from the horizontal plane defined at the LM position.
2. The time between CSI ignition and CDH ignition must be computed to be greater than 10 minutes for successful completion of the program.
3. The time between CDH ignition and TPI ignition must be computed to be greater than 10 minutes for successful completion of the program.
4. CDH Delta V is selected to minimize the variation of the altitude difference between the orbits.
5. CSI burn is defined such that the impulsive Delta V is in the horizontal plane defined by the active vehicle position at CSI ignition.
6. The pericenter altitude of the orbit following CSI and CDH must be greater than 35,000 feet (lunar orbit) or 85 nmi (earth orbit) for successful completion of this program.
7. The CSI and CDH maneuvers are assumed to be parallel to the plane of the CSM orbit. However, out-of-plane parameters are computed for TIG(CSI) and displayed. In addition, the N81 display is modified to establish an antinode at CSI.
8. If P20 is in operation while this program is operating, the astronaut may hold at any flashing display and take optics marks, and/or he may allow VHF ranging marks to accumulate.
9. The ISS need not be on to complete this program unless automatic state vector updating is desired by the Universal Tracking program (P20).

Sequence of Events:

V37E72E

This sequence is identical to the P32 manual sequence when entered at TARGETING. Record maneuver parameters and transmit to LM.

P73—LM CONSTANT DELTA ALTITUDE (CDH) TARGETING PROGRAM

Purpose:

1. To calculate parameters associated with the concentric flight plan maneuvers with the exception of Coelliptic Sequence Initiation (CSI) for LM execution of the maneuvers under control of the LGC. The concentric flight plan maneuvers are the Coelliptic Sequence Initiation (CSI), the Constant Delta Altitude maneuver (CDH), the Transfer Phase Initiation (TPI), and the Transfer Phase Final (TPF) or braking maneuver.
2. To calculate these parameters based upon maneuver data approved and keyed into the AGC by the astronaut.
3. To display to the astronaut and the ground dependent variables associated with the concentric flight plan maneuvers for approval by the astronaut/ground.

Assumptions:

1. This program is based upon previous completion of the Coelliptic Sequence Initiation (CSI) program (P72). Therefore:
   a. At a selected TPI time the line of sight between the LM and the CSM was selected to be a prescribed angle (E) from the horizontal plane defined at the active vehicle position.
   b. The time between CSI ignition and CDH ignition was computed to be greater than 10 minutes.
   c. The time between CDH ignition and TPI ignition was computed to be greater than 10 minutes.
   d. The variation of the altitude difference between the orbits was minimized.
   e. The CSI burn was defined such that the impulsive Delta V was in the horizontal plane defined by the active vehicle position at CSI ignition.
   f. The pericenter altitudes of the orbits following CSI and CDH were computed to be greater than 35,000 feet (lunar orbit) or 85 nmi (earth orbit).
   g. The CSI and CDH maneuvers were assumed to be parallel to the plane of the CSM orbit; however, out-of-plane parameters are computed for TIG(CDH) and displayed. In addition, the N81 display is modified to establish an antinode at CDH.
2. If P20 is in operation while this program is operating, the astronaut may hold at any flashing display and take optics marks, and/or he may allow VHF ranging marks to accumulate.
3. The ISS need not be on to complete this program unless automatic state vector updating is desired by the Universal Tracking program (P20).

Sequence of Events:

V37E73E

This sequence is identical to the P33 manual sequence when entered at TARGETING. Record maneuver parameters and transmit to LM.

P74—LM TRANSFER PHASE INITIATION (TPI) TARGETING PROGRAM

Purpose:

1. To calculate the required Delta V and other initial conditions required by the LGC for LM execution of the Transfer Phase Initiation maneuver, given:
   a. Time of ignition (TIG(TPI)) or the elevation angle (E) of the LM/CSM LOS at TIG(TPI).
   b. Central angle of transfer (CENTANG) from TIG(TPI) to intercept time TIG(TPF).
2. To calculate TIG(TPI) given E or E given TIG(TPI).
3. To display to the astronaut and the ground certain dependent variables associated with the maneuver for approval by the astronaut/ground.

Assumptions:

1. The program must be done over a tracking station for real-time ground participation in AGC data input and output.
2. If P20 is in operation while this program is operating, the astronaut may hold at any flashing display and take optics marks, and/or he may allow VHF ranging marks to accumulate.
3. Once the parameters required for computation of the maneuver have been completely specified, the value of the active vehicle central angle of transfer is computed and stored. This number will be available for display to the astronaut through the use of V06 N52.

   The astronaut would call this display to verify that the central angle of transfer of the active vehicle is not within 170 to 190 degrees. If the angle is within this zone, the astronaut should reassess the input targeting parameters based upon Delta V and expected maneuver time.
4. When determining the initial position and velocity of the target at intercept time, either conic or precision integration may be used. The time difference for computation is approximately 10:1 (that is, conic integration is 10 times faster than precision integration).
5. The ISS need not be on to complete this program unless automatic state vector updating is desired by the Universal Tracking program (P20).

Sequence of Events:

V37E74E

This sequence is identical to the P34 manual sequence when entered at TARGETING. Record maneuver parameters and transmit to LM.

P75–LM TRANSFER PHASE MIDCOURSE (TPM) TARGETING PROGRAM

Purpose:

1. To calculate the required Delta V and other initial conditions required by the LGC for LM execution of the next midcourse correction of the transfer phase of an active LM rendezvous.

Assumptions:

1. IF P20 is in operation while this program is operating, the astronaut may hold at any flashing display and take optics marks, and/or he may allow VHF ranging marks to accumulate.

2. Once the parameters required for computation of the maneuver have been completely specified, the value of the active vehicle central angle of transfer is computed and stored. This number will be available for display to the astronaut through the use of V06 N52.

   The astronaut would call this display to verify that the central angle of transfer of the active vehicle is not within 170 to 190 degrees. If the angle is within this zone the astronaut should reassess the input targeting parameters based upon Delta V and expected maneuver time.

3. The time of intercept (T(INT)) was defined by previous completion of the LM Transfer Phase Initiation (TPI) program (P74) and is presently available in AGC storage.
4. There is no requirement for ISS operation during this program unless automatic state vector updating is desired by the Universal Tracking program (P20).

Sequence of Events:

V37E75E

This sequence is identical to the P35 manual sequence when entered at TARGETING. Record maneuver parameters and transmit to LM.

P76—TARGET DELTA V PROGRAM

Purpose:

1. To provide a means of notifying the AGC that the LM has changed its orbital parameters by the execution of a thrusting maneuver.
2. To provide to the AGC the Delta V applied to the LM to enable an updating of the LM state vector.

Assumptions:

1. The CSM crew has the Delta V to be applied by the LM in local vertical axes at a specified TIG. These values are displayed prior to TIG by the Prethrust Targeting program in the LM. No provision is made in these thrusting programs to display the results of the maneuver in a form usable by this routine. If the burn is not nominal and this Delta V is not as specified or if TIG is not as originally specified, consult backup procedures.
2. In the event of an uplink failure, the astronaut can create a reasonable LM state vector for LM insertion into orbit from the lunar surface by keying in the expected LM thrusting maneuver from the lunar surface while the surface flag is set. This will cause the computer to take the position vector of the landing site and add the inputted Delta V and store the results in the LM state vector. The landing site will not be altered.
3. This program may be selected manually or internally by the MINKEY controller.

Sequence of Events:

If entered automatically by the MINKEY controller, go to Flashing V06N33.

V37E76E

Flashing V06N33	Time of ignition of LM thrusting maneuver TIG		00XXX h 000XX min 0XX.XX s

TIG is loaded with CSM calculated TIG from targeting program V25E to modify TIG.

PRO

Flashing V06N84	Delta V of LM at TIG in Local Vertical Coordinates	X Y Z	XXXX.X ft/s XXXX.X ft/s XXXX.X ft/s

N84 is loaded with the negative of the CSM targeting solution, modified for out-of-plane velocity (YDOT). IF CSM actually did burn, N84 is loaded with zero.
V25E to modify Delta V.

PRO

If manual sequence, go to Flashing V37
If MINKEY sequence, the next targeting program in the rendezvous sequence is initiated. The maneuver sequence is:

1. Multiple Coelliptic Sequence Initiation (CSI) maneuvers (P32),
2. Height Adjustment (HAM) maneuver (P31),
3. Final Coelliptic Sequence Initiation (CSI) maneuver (P32),
4. Plane change (PC) maneuver (P36)*,
5. Constant Delta Altitude (CDH) maneuver (P33),
6. Transfer Phase Initiation (TPI) maneuver (P34),
7. Transfer Phase Midcourse (TPM) number one maneuver (P35),
8. Transfer Phase Midcourse (TPM) number two maneuver (P35),
9. Final Rendezvous Attitude maneuver and display (P79).

*If P76 is entered after the PC maneuver and an IMU PC reorientation was performed, MINKEY returns to P52 for a realignment of the IMU to its original orientation prior to selection of the CDH targeting program.

Flashing V37	Select new program (manual sequence)

P77-CSM TARGET DELTA V PROGRAM

Purpose:

1. To provide a means of notifying the CMC that CSM has changed (or will change) its orbital parameters by the execution of a thrusting maneuver when Average G is not running.
2. To provide to the CMC the Delta V applied to the CSM to enable an updating of the CSM state vector.

Assumptions:

1. The crew has the Delta V applied to the CSM in local vertical coordinates at a specified TIG.
2. R03 should be performed after P77 to update CSM mass.
3. The contents of N81 is the same as the previous value at entrance to P77.

Sequence of Events:

V37E77E

Flashing V06N33	TIG at which Delta V maneuver was executed		00XXX h 000XX min 0XX.XX s

V25E to Load TIG

PRO

Flashing V06N81	Delta V executed in Local Vertical Coordinates	X Y Z	XXXX.X ft/s XXXX.X ft/s XXXX.X ft/s

V25E to load Delta V

PRO

Flashing V37	Select New Program	

P79-FINAL RENDEZVOUS PROGRAM

Purpose:

1. To establish X-axis tracking by P20.
2. To select the rendezvous parameter display (R31) internally to provide range and range rate information prior to the braking phase of rendezvous.

Assumptions:

1. This program may be selected manually or internally by the MINKEY controller.

Sequence of Events:

If entered automatically by MINKEY controller, go to MANEUVER.

V37E79E

Note: If P20 rendezvous options is not running, P20 Option 0 is activated now.

MANEUVER

If the tracking attitude error between the vehicle X-axis and the LOS to the LM is less than 10° (computed by P20/R61), go to DISPLAY.

Flashing V50N18	Desired FDAI angles for automaneuver	OG(R) IG(P) MG(Y)	XXX.XX deg XXX.XX deg XXX.XX deg

PRO

V06N18	Maneuver in Progress

When maneuver is complete, go to DISPLAY

Note: P20(R61) will maintain tracking attitude computations. If the attitude error becomes greater than 10°, the astronaut will be alerted by: UPLINK ACTY light on.

V58E

Request automaneuver execution. Go to MANEUVER.

DISPLAY

Flashing V16N54	Range Range Rate THETA	XXX.XX nmi XXXX.X ft/s XXX.XX deg

PRO

Flashing V37	Select New Program

R07-MINKEY CONTROLLER ROUTINE

Purpose:

1. To perform automatic sequencing of rendezvous programs.
2. To establish Universal Tracking program (P20) Option 0, with present values for P20 displays.
3. To perform Target Delta V (P76) after each rendezvous maneuver with appropriately computed P76 displays.

Assumptions:

1. The initialization values for the W matrix must be loaded prior to selection of a rendezvous targeting program.
2. This routine is initiated by astronaut selection of a rendezvous targeting program or the Rendezvous Final Phase (P79) program.

Sequence of Events:

The following sequence is presented as a summary of program flow and significant event occurrence for a nominal rendezvous. The MINKEY controller may be activated at any of six reset points: pre-HAM (P31), pre-CSI (P32), pre-PC (P36), pre-CDH (P33), pre-TPI (P34), or pre-TPM (P35). This sequence is initiated at the HAM maneuver prior to the final CSI maneuver; however, multiple CSI maneuvering may be sequenced by the MINKEY controller.

P31 (HAM Targeting)

1. Start rendezvous navigation (P20, Option 0) with optics tracking assumed; maneuver to track attitude and enable VHF ranging and state vector updating.
2. Perform HAM targeting computations.
3. Inhibit rendezvous navigation.
4. Select a burn program*.
5. Update LM orbital parameters (P76) for LM thrusting maneuver.
6. Select final coelliptic sequence initiation targeting (P32).

P32 (CSI Targeting)

1. Start rendezvous navigation (P20), maneuver to tracking attitude, and enable VHF ranging and state vector updating.
2. Perform CSI targeting computations.
3. Inhibit rendezvous navigation.
4. Select a burn program*.
5. Update LM orbital parameters (P76) for LM thrusting maneuver.
6. Selection of a subsequent targeting program is based on the number of apsides (NN) before CDH. For a multiple CSI rendezvous sequence the number of apsides will be greater than 4.
   a. If NN $>$ 4, select Coelliptic Sequence Initiation targeting (P32).
   b. If NN = 4, select Height Adjust Maneuver targeting (P31).
   c. If NN $<$ 4, select Plane Change targeting (P36).

P36 (PC Targeting)

1. Start rendezvous navigation (P20), maneuver to tracking attitude, and enable VHF ranging and state vector updating.
2. Perform PC targeting computations.
3. Inhibit rendezvous navigation.
4. Plane change realignment option:
   a. If PC Delta V = 0, go to LM Delta V update (P76), Step 7.
   b. If PC Delta V $\neq$ 0, select IMU Realignment (P52) program.
      (1) If X-axis thrusting desired, realign IMU to PC orientation to avoid gimbal lock and go to selection of burn program, Step 5.
      (2) If Y-axis thrusting desired, IMU realignment is bypassed and RCS burn program (P41) is selected.

R07 (continued)

5. Select a burn program* (P41 selected if Y axis RCS used).
6. Reorient IMU to original orientation prior to PC realign and maneuver to LM tracking attitude (only if IMU realignment was performed).
7. Update LM orbital parameters (P76) for LM thrusting maneuver.
8. Select Constant Delta Altitude targeting (P33).

P33 (CDH Targeting)

1. Start rendezvous navigation (P20), maneuver to tracking attitude, and enable VHF ranging and state vector updating.
2. Perform CDH targeting computations.
3. Inhibit rendezvous navigation.
4. Select a burn program*.
5. Update orbital parameters (P76) for LM thrusting maneuver.
6. Select Transfer Phase Initiation targeting (P34)

P34 (TPI Targeting)

1. Start rendezvous navigation (P20), maneuver to tracking attitude, and enable VHF tracking and state vector updating.
2. Perform TPI targeting computations.
3. Inhibit rendezvous navigation.
4. Select a burn program*.
5. Update LM orbital parameter (P76) for LM thrusting maneuver.
6. Select Transfer Phase Midcourse targeting (P35).

P35 (TPM Targeting)

1. Start rendezvous navigation (P20), maneuver to tracking attitude, and enable VHF tracking and state vector updating.
2. Perform TPM targeting computations and reinitialize W matrix.
3. Inhibit rendezvous navigation.
4. Select a burn program*.
5. Update LM orbital parameters (P76) for LM thrusting maneuver.
6. Test for completion of midcourse correction (MCC) maneuver.
    a. If MCC-1 just completed, return to TPM targeting (P35) for MCC-2 maneuver computations.
    b. If MCC-2 just completed, go to final rendezvous (P79).

P79 (Final Rendezvous)

1. Start rendezvous navigation (P20), maneuver to X-axis tracking attitude, and enable VHF tracking and state vector updating.
2. Activate rendezvous parameters display (R31) of range, range rate, and theta.
3. Exit MINKEY autosequencing and manually select new program.

*Automatic selection of a burn program (P40/P41) is based upon the Delta V solution computed in the targeting program:

1. If Delta V $<$ 7 ft/s, the RCS Burn (P41) program is selected.
2. If Delta V $\geq$ 7 ft/s, the SPS Burn (P40) program is selected.

LM SOFTWARE

LUMINARY 1E
(REV 210 OF LUMINARY)
LM DSKY
COMPUTER PROGRAMS
COMPUTER ROUTINES
VERB CODES
NOUN CODES
ALARM CODES
OPTION CODES
CHECKLIST CODES
FLAGWORD BIT ASSIGNMENTS
IMODES30 AND IMODES33
CHANNEL BIT ASSIGNMENTS
COMPUTER PROGRAM DESCRIPTION

LM DSKY

UPLINK ACTY light — is energized by the first character of a digital UPLINK message received by the LGC.

NO ATT Light — is energized when the LGC is in the Operate mode and there is no inertial reference, that is, the ISS is off, caged, or in the Coarse Align mode.

STBY Light — is energized when the LGC is in the Standby mode and deenergized when the LGC is in the Operate mode.

KEY REL Light

1. Energized when:
   a. An internal display comes while the astronaut has the DSKY.
   b. An astronaut keystroke is made while an internal flashing display is currently on the DSKY.
   c. The astronaut makes a keystroke on top of (his own) Monitor Verb display.
2. Deenergized when:
   a. Astronaut relinquishes the DSKY by operating the KEY REL button.
   b. Astronaut terminates his current sequence normally, for example:
      (1) with final ENTR of a load sequence.
      (2) the ENTR of a response to a flashing display.
      (3) the ENTR of an extended verb request.

OPR ERR Light — is energized when the DSKY operator performs an improper sequence of key depressions.

DAP NOT IN CONTROL Light (unmarked) — The DAP NOT IN CONTROL light on the DSKY is a constant indication to the astronauts whether or not the PGNS digital autopilot is controlling the spacecraft attitude. It is lit whenever the autopilot is in the Idle, Off, or Minimum Impulse mode; it is extinguished in all other modes.

PRIORITY DISPLAY Light (unmarked) — The PRIORITY DISPLAY light will alert the astronaut that a priority display from P20 is waiting to come up if he is using the DSKY over a foreground program and the KEY RELEASE light is already on.

1. The light is turned on when a priority display is put up.
2. The light will be turned off for:
   a. A response to the display of PROCEED, V33ENTER, V32ENTER, V34ENTER.
   b. A response of V37E (change Major Mode), V36E (Fresh Start), V56E (Terminate Tracking).

TEMP Light — The LGC receives a signal from the IMU when the stable member temperature is in the range 126.3° F to 134.3° F. In the absence of this signal, the TEMP lamp on the DSKY is acutated.

GIMBAL LOCK Light — is energized when the middle gimbal angle exceeds ± 70 degrees from its zero position. When the middle gimbal angles exceeds ± 85 degrees from its zero position the LGC automatically commands the Coarse Align mode in the ISS to prevent gimbal oscillation. The NO ATT light will then be energized.

PROG Light — Under a variety of situations a program alarm is generated. The program alarm actuates the PROG lamp on the DSKY.

RESTART Light — In the event of a RESTART during operation of a program, a latch is set in the LGC which illuminates the RESTART lamp on the DSKY until the latch is manually reset by pressing RSET.

TRACKER Light — When the Rendezvous Radar is on, the light is energized when:

1. a RR CDU failed with the RR in the Auto mode and RR CDU's not being zeroed.
2. when the RR Data Good bar discrete occurs during an LGC data read sequence.

ALT Light — When the Landing Radar is on, the light is energized (on steady or flashing) when:

1. LR Range Data Good discrete was not present before and after LR altitude sampling (STEADY).
2. LR Altitude Reasonability test was failed (FLASHING).

VEL Light — When the Landing Radar is on, the light is energized (on STEADY or FLASHING) when:

1. LR Velocity Data Good discrete was not present before and after LR velocity sampling (STEADY).
2. LR Velocity Reasonability test was failed (FLASHING).

COMP ACTY Light —is energized when the LGC is occupied with an internal sequence.

Display Panel — consists of 24 electroluminescent sections. Each section is capable of displaying a decimal character or remaining blank, except the three sign sections. These display a plus sign, a minus sign, or a blank. The numerical sections are grouped to form three data display registers, each of five numerical characters; and three control display registers, each of two numerical characters. The data display registers are referred to as R1, R2, R3. The control display registers are known as VERB, NOUN, and PROGRAM.

At maximum activity, the complete display panel may be updated in 0.50 second.

Keyboard —contains the following buttons:

1. VERB — Pushing this button indicates that the next two numerical characters keyed are to be interpreted as the Verb Code.
2. NOUN — Pushing this button indicates that the next two numerical characters keyed are to be interpreted as the Noun Code.
3. + and - — are sign keys used for sign convention and to identify decimal data.
4. 0 - 9 —are numerical keys.
5. CLR — is used during a data loading sequence to blank the data display register (R1, R2, R3) being used. It allows the operator to reload the data word.
6. PRO —This pushbutton performs two functions:
   a. When the LGC is in the Standby mode, pressing this button will put the LGC in the Operate mode, turn off the STBY light, and automatically select Routine 00 in the LGC, after restoring the clock.
   b1. When the LGC is in the Operate mode but Program 06 is not selected, pressing the button will provide the "Proceed" function.
   b2. When the LGC is in the Operate mode and Program 06 is selected, pressing the button will put the LGC in the Standby mode and turn on the STBY light.
7. ENTR —is used in three ways:
   a. To direct the LGC to execute the Verb/Noun now appearing on the Verb/Noun lights.
   b. To direct the LGC to accept a data word just loaded.
   c. To respond to a "Please Perform" request.
8. RSET — turns off alarm indicator on the DSKY providing the alarm condition has been corrected.

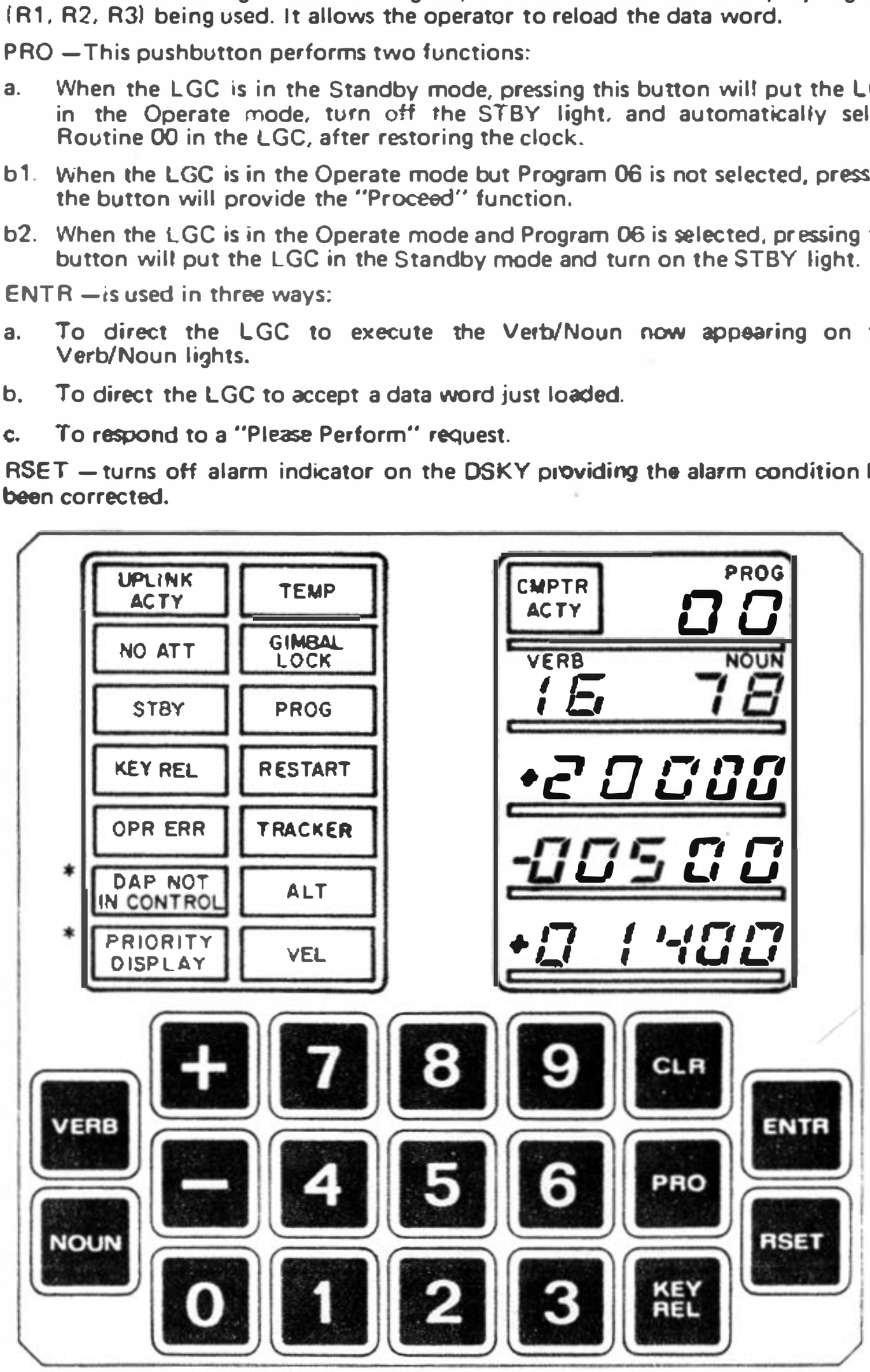

* Labels shown are not on lights.

PROGRAMS FOR PROGRAM LUMINARY

PHASE	PROGRAM NUMBER	PROGRAM TITLE
Service	00	LGC Idling
	06	LGC Power Down
Ascent	12	Powered Ascent
Coast	20	Rendezvous Navigation
	21	Ground Track Determination
	22	Lunar Surface Navigation
	25	Preferred Tracking Attitude
	27	LGC Update
Pre-thrusting	30	External Delta V
	32	Coelliptic Sequence Initiation (CSI)
	33	Constant Delta Altitude (CDH)
	34	Transfer Phase Initiation (TPI)
	35	Transfer Phase Midcourse (TPM)
Thrusting	40	DPS
	41	RCS
	42	APS
	47	Thrust Monitor
Align-ments	51	IMU Orientation Determination
	52	IMU Realign
	57	Lunar Surface Align
Descent	63	Braking Phase
	64	Approach Phase
	66	Landing Phase (ROD)
	68	Landing Confirmation
Aborts and Backups	70	DPS Abort
	71	APS Abort
	72	CSM Coelliptic Sequence Initiation (CSI) Targeting
	73	CSM Constant Delta Altitude (CDH) Targeting
	74	CSM Transfer Phase Initiation (TPI) Targeting
	75	CSM Transfer Phase Midcourse (TPM) Targeting
	76	State Vector Update (CSM)
	77	State Vector Update (LM)

ROUTINES FOR PROGRAM LUMINARY

ROUTINE	ROUTINE TITLE
00	Final Automatic Request Terminate
01	Erasable Modification
02	IMU Status Check
03	DAP Data Load
04	Rendezvous Radar/Landing Radar Self-Test
05	S-Band Antenna
09	R10/R11/R12 Service
10	Landing Analog Displays
11	Abort Discretes Monitor
12	Descent State Vector Update
13	Landing Auto Modes Monitor
20	Landing Radar/Rendezvous Radar Read
21	Rendevzous Radar Designate
22	Rendezvous Radar Data Read
23	Rendezvous Radar Manual Acquisition
24	Rendezvous Radar Search
25	Rendezvous Radar Monitor
26	Lunar Surface RR Designate
30	Orbit Parameter Display
31	Rendezvous Parameter Display
33	LGC/AGC Clock Synchronization
36	Out-of-Plane Rendezvous Display
40	DPS/APS Thrust Fail
41	State Vector Integration (MIDTOAVE)
47	AGS Initialization
50	Coarse Align
51	In-Flight Fine Align
52	Auto Optics Positioning
53	AOT Mark
54	Sighting Data Display
55	Gyrotorquing
56	Terminate Tracking
57	MARKRUPT
58	Celestial Body Definition
59	Lunar Surface Sighting Mark
60	Attitude Maneuver
61	Preferred Tracking Attitude
62	Crew-Defined Maneuver
63	Rendezvous Final Attitude
65	Fine Preferred Tracking Attitude
76	Extended Verb Interlock
77	LR Spurious Test

LIST OF VERBS USED IN PROGRAM LUMINARY

REGULAR VERBS

00	Not in use
01	Display Octal Component 1 in R1
02	Display Octal Component 2 in R1
03	Display Octal Component 3 in R1
04	Display Octal Components 1, 2 in R1, R2
05	Display Octal Components 1, 2, 3 in R1, R2, R3
06	Display decimal in R1 or R1, R2 or R1, R2, R3
07	Display DP decimal in R1, R2 (test only)
08-10	Spare
11	Monitor Octal Component 1 in R1
12	Monitor Octal Component 2 in R1
13	Monitor Octal Component 3 in R1
14	Monitor Octal Components 1, 2 in R1, R2
15	Monitor Octal Components 1, 2, 3 in R1, R2, R3
16	Monitor decimal in R1 or R1, R2 or R1, R2, R3
17	Monitor DP decimal in R1, R2 (test only)
18-20	Spare
21	Load Component 1 into R1
22	Load Component 2 into R2
23	Load Component 3 into R3
24	Load Components 1, 2 into R1, R2
25	Load Components 1, 2, 3 into R1, R2, R3
26	Spare
27	Display Fixed Memory
28-29	Spare
30	Request EXECUTIVE
31	Request WAITLIST
32	Recycle program
33	Proceed without DSKY inputs
34	Terminate function
35	Test lights
36	Request FRESH START
37	Change program (major mode)
38-39	Spare

EXTENDED VERBS

40	Zero CDU's (specify N20 or N72)
41	Coarse align CDU's (specify N20 or N72)
42	Fine align IMU
43	Load IMU attitude error needles
44	Terminate RR continuous designate (V41N72 Option 2)
45-46	Spare
47	Initialize AGS (R47)
48	Request DAP Data Load routine (R03)
49	Request Crew Defined Maneuver routine (R62)
50	Please perform
51	Spare
52	Mark X reticle
53	Mark Y reticle
54	Mark X or Y reticle
55	Increment LGC time (decimal)
56	Terminate tracking (P20 and P25)
57	Permit Landing Radar updates
58	Inhibit Landing Radar updates
59	Command LR to Positon 2
60	Display vehicle attitude rates on FDAI error needles

LIST OF VERBS USED IN PROGRAM LUMINARY

61	Display DAP following attitude errors
62	Display total attitude errors with respect to N22
63	Sample radar once per second (R04)
64	Request S-Band Antenna routine (R05)
65	Disable U and V jet firings during DPS burns
66	Vehicles are attached. Move this vehicle state vector to other vehicle
67	Display W matrix
68	Cause Lunar Terrain model to be bypassed
69	Cause RESTART
70	Start LGC update, liftoff time (P27)
71	Start LGC update, block address (P27)
72	Start LGC update, single address (P27)
73	Start LGC update, LGC time (P27)
74	Initialize erasable dump via DOWNLINK
75	Enable U and V jet firings during DPS burns
76	Minimum Impulse Command mode
77	Rate Command and Attitude Hold mode
78	Start LR spurious test (R77)
79	Stop LR spurious test
80	Enable LM state vector update
81	Enable CSM state vector update
82	Request Orbit Parameter display (R30)
83	Request Rendezvous Parameter display (R31)
84	Spare
85	Display Rendezvous Radar LOS azimuth and elevation
86-88	Spare
89	Request Rendezvous Final Attitude maneuver (R63)
90	Request Out of Plane Rendezvous display (R36)
91	Display BANKSUM
92	Start IMU performance tests (ground use)
93	Enable W matrix initialization
94	Spare
95	No update of either state vector allowed (P20 or P22)
96	Interrupt integration and go to P00
97	Perform Engine Fail procedure (R40)
98	Spare
99	Please Enable Engine Ignition

LIST OF NOUNS USED IN PROGRAM LUMINARY

00	Not in use	
01	Specify address (fractional)	.XXXXX fractional .XXXXX fractional .XXXXX fractional
02	Specify address (whole)	XXXXX. integer XXXXX. integer XXXXX. integer
03	Specify address (degree)	XXX.XX deg XXX.XX deg
04	Angular error/difference	XXX.XX deg
05	Angular error/difference	XXX.XX deg
06	Option code ID Option code Data code	Octal Octal Octal
07	Channel/E Memory operator	
	ECADR BIT ID Action	Octal Octal Octal
08	Alarm data	
	ADRES BBANK ERCOUNT	Octal Octal Octal
09	Alarm codes	
	First Second Last	Octal Octal Octal
10	Channel to be specified	Octal
11	TIG of CSI/T (APO APSIS)	00XXX. h 000XX. min 0XX.XX s
12	Option code (extended verbs only)	Octal Octal
13	TIG of CDH	00XXX. h 000XX. min 0XX.XX s
14	CHECKLIST (used internally by extended verbs only; N25 is pasted after display)	XXXXX.
15	Increment address	Octal
16	Time of event (used by extended verbs only)	00XXX. h 000XX. min 0XX.XX s
17	Spare	
18	Desired automaneuver FDAI ball angles	R XXX.XX deg P XXX.XX deg Y XXX.XX deg

LIST OF NOUNS USED IN PROGRAM LUMINARY

19	Spare		
20	Present ICDU angles	OG	XXX.XX deg
		IG	XXX.XX deg
		MG	XXX.XX deg
21	PIPA's	X	XXXXX. pulses
		Y	XXXXX. pulses
		Z	XXXXX. pulses
22	Desired ICDU angles	OG	XXX.XX deg
		IG	XXX.XX deg
		MG	XXX.XX deg
23	Spare		
24	Delta time for LGC clock		00XXX. h
			000XX. min
			0XX.XX s
25	CHECKLIST (used with V50)		XXXXX.
26	PRIO/DELAY, ADRES, BBCON		Octal
			Octal
			Octal
27	Self-test on/off switch		XXXXX.
28-31	Spare		
32	Time from perigee		00XXX. h
			000XX. min
			0XX.XX s
33	Time of ignition		00XXX. h
			000XX. min
			0XX.XX s
34	Time of event		00XXX. h
			000XX. min
			0XX.XX s
35	Time from event		00XXX. h
			000XX. min
			0XX.XX s
36	Time of LGC clock		00XXX. h
			000XX. min
			0XX.XX s
37	Time of ignition (TPI)		00XXX. h
			000XX. min
			0XX.XX s
38	Time of state being integrated		00XXX. h
			000XX. min
			0XX.XX s
39	Spare		

LIST OF NOUNS USED IN PROGRAM LUMINARY

40 *	Time from ignition/cutoff	XX b XX min/s
	VG	XXXX.X ft/s
	Delta V (accumulated)	XXXX.X ft/s
41	Target (V92 only)	
	Azimuth	XXX.XX deg
	Elevation	XX.XXX deg
42	Apocenter altitude	XXXX.X nmi
	Pericenter altitude	XXXX.X nmi
	Delta V (required)	XXXX.X ft/s
43	Latitude	XXX.XX deg (+ north)
	Longitude	XXX.XX deg (+ east)
	Altitude	XXXX.X nmi
44 *	Apocenter altitude	XXXX.X nmi
	Pericenter altitude	XXXX.X nmi
	TFF	XX b XX min/s
45 *	Marks	XXXXX.
	Time from ignition of next/last burn	XX b XX min/s
	Middle gimbal angle	XXX.XX deg
46	DAP configuration	Octal
	Switch function fail code	Octal
47	LM weight	XXXXX. lb
	CSM weight	XXXXX. lb
48	Gimbal pitch trim	XXX.XX deg
	Gimbal roll trim	XXX.XX deg
49	Delta R	XXXX.X nmi
	Delta V	XXXX.X ft/s
	Radar data source code	0000X
50	Spare	
51	S-band antenna angles	
	Pitch (Alpha)	XXX.XX deg
	Yaw (Beta)	XXX.XX deg
52	Central angle of active vehicle	XXX.XX deg
53	Spare	
54	Range	XXX.XX nmi
	Range rate	XXXX.X ft/s
	Theta	XXX.XX deg
55	Number of apsidal crossings	XXXXX.
	Elevation angle	XXX.XX deg
	Central angle of passive vehicle	XXX.XX deg
56	RR LOS	
	Azimuth	XXX.XX deg
	Elevation	XXX.XX deg
57	Spare	
58	Pericenter altitude (post TPI)	XXXX.X nmi
	Delta V (TPI)	XXXX.X ft/s
	Delta V (TPF)	XXXX.X ft/s

*Display cannot be changed via a data load (that is, V25 NXXE, and so forth)

LIST OF NOUNS USED IN PROGRAM LUMINARY

59	Delta V LOS 1	XXXX.X ft/s
	Delta V LOS 2	XXXX.X ft/s
	Delta V LOS 3	XXXX.X ft/s
60	Forward velocity	XXXX.X ft/s
	Altitude rate	XXXX.X ft/s
	Computed altitude	XXXXX. ft
61 •	Time to go in braking phase	XX b XX min/s
	Time from ignition	XX b XX min/s
	Crossrange distance	XXXX.X nmi
62 •	Absolute value of velocity	XXXX.X ft/s
	Time from ignition	XX b XX min/s
	Delta V (accumulated)	XXXX.X ft/s
63	Delta Altitude (+LR >LGC)	XXXXX. ft
	Altitude rate	XXXX.X ft/s
	Computed altitude	XXXXX. ft
64 •	Time left for redesignations (TR)/LPD	XX b XX seconds/deg
	Altitude rate	XXXX.X ft/s
	Computed altitude	XXXXX. ft
65	Sampled LGC time (fetched in interrupt)	00XXX. h
		000XX. min
		0XX.XX s
66 •	LR slant range (R2)	XXXXX. ft
	LR position (R3)	00001/00002
67	LR VX	XXXXX. ft/s
	LR VY	XXXXX. ft/s
	LR VZ	XXXXX. ft/s
68 •	Ground range to landing site	XXXX.X nmi
	Time to go in braking phase	XX b XX min/s
	Absolute value of velocity	XXXX.X ft/s
69	Landing site correction	Z XXXXX. ft
	Landing site correction	Y XXXXX. ft
	Landing site correction	X XXXXX. ft
70	AOT detent code/star code (before mark)	Octal
		Octal
		Octal
71	AOT detent code/star (after mark)	Octal
	Mark X/Cursor Counter (Max = 5)	Octal
	Mark Y/Spiral Counter (Max = 5)	Octal
72	RR trunnion angle (360 degrees — CDU trunnion angle)	XXX.XX deg
	RR shaft angle	XXX.XX deg
73	Desired RR trunnion angle (360 degrees — CDU trunnion angle)	XXX.XX deg
	Desired RR shaft angle	XXX.XX deg
74 •	Time from ignition	XX b XX min/s
	Yaw after vehicle rise	XXX.XX deg
	Pitch after vehicle rise	XXX.XX deg
75 •	Delta altitude (CDH)	XXXX.X nmi
	Delta time (CDH-CSI or TPI-CDH) (Modular 60)	XX b XX min/s
	Delta time (TPI-CDH or TPI-NOMTPI) (Modular 60)	XX b XX min/s

*Display cannot be changed via a data load (that is, V25 NXXE, and so forth)

LIST OF NOUNS USED IN PROGRAM LUMINARY

76	Desired downrange velocity	XXXX.X ft/s
	Desired radial velocity	XXXX.X ft/s
	Crossrange distance	XXXX.X nmi
77 *	Time to engine cutoff	XX b XX min/s
	Velocity normal to CSM plane (LM) (+Rt)	XXXX.X ft/s
	Absolute value of velocity	XXXX.X ft/s
78 *	RR range	XXX.XX nmi
	RR range rate	XXXXX. ft/s
	Time from ignition	XX b XX min/s
79	Cursor angle	XXX.XX deg
	Spiral angle	XXX.XX deg
	Position code	+0000X
80	Data indicator	XXXXX.
	Omega	XXX.XX deg
81	Delta VX (LV) (+Fwd)	XXXX.X ft/s
	Delta VY (LV) (+Rt)	XXXX.X ft/s
	Delta VZ (LV) (+Dn)	XXXX.X ft/s
82	Delta VX (LV) (+Fwd)	XXXX.X ft/s
	Delta VY (LV) (+Rt)	XXXX.X ft/s
	Delta VZ (LV) (+Dn)	XXXX.X ft/s
83	Delta VX (body) (+Up)	XXXX.X ft/s
	Delta VY (body) (+Rt)	XXXX.X ft/s
	Delta VZ (body) (+Fwd)	XXXX.X ft/s
84	Delta VX (LV of other vehicle) (+ R x V) xR)	XXXX.X ft/s
	Delta VY (LV of other vehicle) (+ (V x R)	XXXX.X ft/s
	Delta VZ (LV of other vehicle) (+ (-R)	XXXX.X ft/s
85	VGX (body) (+ Up)	XXXX.X ft/s
	VGY (body) (+ Rt)	XXXX.X ft/s
	VGZ (body) (+ Fwd)	XXXX.X ft/s
86	VGX (LV) (+ Fwd)	XXXX.X ft/s
	VGY (LV) (+ Rt)	XXXX.X ft/s
	VGZ (LV) (+ Dn)	XXXX.X ft/s
87	Backup optics LOS	
	Azimuth (+ Rt)	XXX.XX deg
	Elevation (+ Up)	XXX.XX deg
88	Components of celestial body unit vector	X .XXXXX
		Y .XXXXX
		Z .XXXXX
89	Landmark latitude (+ North)	XX.XXX deg
	Landmark longitude/2 (+ East)	XX.XXX deg
	Landmark altitude	XXX.XX nmi
90	Rendezvous out of plane parameters	
	Y	XXX.XX nmi
	Y dot	XXXX.X ft/s
	PSI	XXX.XX deg
91	Altitude	XXXXXb. nmi
	Velocity	XXXXX. ft/s
	Flight path angle	XXX.XX deg

*Display cannot be changed via a data load (that is, V25 NXXE, and so forth)

LIST OF NOUNS USED IN PROGRAM LUMINARY

92	Percent of full thrust (10,500 lb) Altitude rate Computed altitude	00XXX % XXXX.X ft/s XXXXX. ft
93	Delta gyro angles	X XX.XXX deg Y XX.XXX deg Z XX.XXX deg
94	VGX (LM) (+Up) Altitude Rate Computed Altitude	XXXX.X ft/s XXXX.X ft/s XXXXX.ft
95	Spare	
96	Spare	
97	System test inputs	XXXXX. XXXXX. XXXXX.
98	System test results and input	XXXXX. .XXXXX XXXXX.
99	RMS in position RMS in velocity RMS in bias	XXXXX. ft XXXX.X ft/s XXXXX. milliradians

LIST OF ALARM CODES USED WITH VERB 05 NOUN 09 FOR PROGRAM LUMINARY

CODE		PURPOSE	SET BY
00111		Mark missing	R53
00112		Mark or mark reject not being accepted /or ROD input and Average G off	R57
00113		No inbits	R57
00114		Mark made but not desired	R57
00115		No marks in last pair to reject	R57
00206		Zero Encode not allowed with Coarse Align plus Gimbal Lock	IMU mode switching V40 N20
00207		ISS turn-on request not present for 90 seconds	T4RUPT
00210		IMU not operating	IMU mode switching, R02
00211		Coarse Align error	IMU mode switching, P51, P57, R50
00212		PIPA fail but PIPA is not being used	IMU mode switching, T4RUPT
00213		IMU not operating with turn-on request	T4RUPT
00214		Program using IMU when turned off	T4RUPT
00217		Bad return from IMUSTALL	P51, P57, R50
00220		Bad REFSMMAT	R02, R47
00401		Desired gimbal angles yields Gimbal Lock	In-flight alignment, IMU-2, FINDCDUW
00402		FINDCDUW routine not controlling attitude because of inadequate pointing vectors	FINDCDUW
00404	*	Two stars not available in any detent	R59
00405	*	Two stars not available	R51
00421		W-matrix overflow	INTEGRV
00501	*	Radar antenna out of limits	R23
00502		Bad radar gimbal angle input	V41N72
00503	*	Radar antenna designate fail	R21, non-* in V41 N72
00510		Radar auto discrete not present	R25, V40 N72
00511		LR not in Position 2 or repositioning	R12
00514	*	RR goes out of Auto mode while in use	P20, P22
00515		RR CDU Fail discrete present	R25
00520		RADARUPT not expected at this time	Radar read, P20, P22, R12
00522		LR position change	R12
00523		LR antenna did not achieve Position 2	R12, V59 (non-* in V59)
00525	*	Delta Theta greater than 3 degrees	R22
00526		Range greater than 400 nmi	P20,P22
00527		LOS not in Mode 2 coverage in P22	R24
		Or vehicle maneuver required in P20	R24
00530	*	LOS not in Mode 2 coverage while on lunar surface after 600 seconds	R21
00600	*	Imaginary roots on first iteration	P32, P72
00601	*	Perigee altitude after CSI < 85 nmi earth orbit, <35,000 feet moon orbit	P32,P72
00602	*	Perigee altitude after CDH < 85 nmi earth orbit, <35,000 feet moon orbit	P32, P72
00603	*	CSI to CDH time less than 10 minutes	P32, P33, P72, P73
00604	*	CDH to TPI time less than 10 minutes	P32, P72
00605	*	Number of iterations exceeds P32/P72 loop maximum (>15)	P32,P72
00606	*	DV exceeds maximum	P32,P72
00611	*	No TIG for given E angle	P33, P34, P73, P74
00701	*	Illegal option code selected	P57
00777		PIPA Fail caused ISS warning	T4RUPT
01102		LGC self-test error	SELFCHECK
01105		DOWNLINK too fast	T4RUPT
01106		UPLINK too fast	T4RUPT
01107		Phase table failure. Assume erasable memory is suspect.	RESTART

LIST OF ALARM CODES USED WITH VERB 05 NOUN 09 FOR PROGRAM LUMINARY

CODE		PURPOSE	SET BY
01301		ARCSIN-ARCCOS input angle too large	INTERPRETER
01406		Bad return from ROOTSPRS during descent guidance	P63, P64
01407		VG increasing (Delta V accumulated at 90 degrees from desired thrust vector)	P40, P42
01410		Unintentional overflow in guidance	P63, P64, P66
01412		Descent ignition algorithm not converging	P63
01466		Throttle servicing insufficient	P66
01520		V37 request not permitted at this time	R00
01600		Overflow in drift test	Ground Test
01601		Bad IMU torque	Ground Test
01703		Too close to ignition; slip time of ignition	R41
01706		Incorrect program selected for vehicle configuration	P40, P42
02001		Jet failures have disabled Y-Z translation	DAP
02002		Jet failures have disabled X translation	DAP
02003		Jet failures have disabled P rotations	DAP
02004		Jet failures have disabled U-V rotations	DAP
03777		ICDU fail caused the ISS warning	T4RUPT
04777		ICDU, PIPA fails caused the ISS warning	T4RUPT
07777		IMU fail caused the ISS warning	T4RUPT
10777		IMU, PIPA fails caused the ISS warning	T4RUPT
13777		IMU, ICDU fails caused the ISS warning	T4RUPT
14777		IMU, ICDU, PIPA fails caused the ISS warning	T4RUPT
20105		AOT mark system in use	R53
20430		Acceleration overflow in integration	Orbital integration
20607		No solution from TIME-THETA or TIME-RADIUS	TIMETHET, TIMERAD
21103		Unused CCS branch executed	ABORT
21204		WAITLIST, VARDELAY, FIXDELAY, DELAYJOB, or LONGCALL called with zero or negative delta time	WAITLIST
21302		SQRT called with negative argument	INTERPRETER
21406		Bad return from ROOTSPS during descent preignition	Ignition algorithm
21501		Keyboard and Display alarm during internal use (NVSUB)	PINBALL
31104		Delay routine busy	EXECUTIVE
31201		Executive overflow—no VAC areas	EXECUTIVE
31202		Executive overflow—no core sets	EXECUTIVE
31203		WAITLIST overflow—too many tasks	WAITLIST
31206	*	Second job attempts to go to sleep via Keyboard and Display program	PINBALL
31207		No VAC area for marks	R53
31210		Two programs using device at same time	IMU mode switching
31211		Illegal interrupt of extended verb	R53
31502	*	Two priority displays waiting	GOPLAY
32000		DAP still in progress at next T5RUPT	DAP

NOTE: For V05 N09 displays:
R1—0XXXX (first alarm to occur after last RSET)
R2—0XXXX (second alarm to occur after last RSET)
R3—XXXXX (alarm which occured last)

R3 will be of the form 4XXXX if more than three alarms occurred since the last RSET or FRESH START.

3XXXX indicates an Abort code that results in a software RESTART
2XXXX indicates a more serious Abort code that results in the program going to R00

*This alarm displayed without having to key in V05 N09E.
An astronaut response is required by this alarm.

LIST OF CHECKLIST REFERENCE CODES USED WITH VERB 50 NOUN 25 PROGRAM LUMINARY

R1 CODE	ACTION TO BE EFFECTED	PROGRAM
00013	Key in normal or gyro torque coarse align	P52
00014	Proceed: Do fine alignment option	R51, P63, P57
	Enter: Do landing site determination (N89)	P57 Option 2
00015	Perform celestial body acquisition	R51, P51
00016	Key in proceed. Do IMU align with nonrejected data.	R53, R51, P51
00062	Switch LGC power down	P06
00201	Switch RR mode to automatic	P20, P22, R04
00203	Switch guidance control to PGNS, mode to Auto, thrust control to Auto	P12, P42, P71, P40, P63, P70
00205	Perform manual acquisition of CSM with RR	R23
00500	Switch LR antenna to Position 1	P63

NOTES: Switch: denotes change position of a console switch
Perform: denotes start or end of a task
Key In: denotes key-in of data through the DSKY

LIST OF OPTION CODES DISPLAYED IN R1 IN CONJUNCTION WITH VERB 04 NOUN 06 TO REQUEST THE ASTRONAUT TO LOAD INTO R2 THE OPTION HE DESIRES FOR PROGRAM LUMINARY

CODE	PURPOSE	INPUT FOR R2	PROGRAM
00001	Specify IMU Orientation	1 = preferred, 2 = nominal 3 = REFSMMAT, 4 = landing site	P52, P57
00002	Specify vehicle	1 = this, 2 = other	P21, R30
00003	Specify tracking attitude	1 = preferred, 2 = other	R63
00004	Specify radar	1 = RR, 2 = LR	R04
00006	Specify RR coarse align option	1 = lockon, 2 = continuous designate	V41N72
00010	Specify alignment mode	0 = anytime, 1 = REFSMMAT + g 2 = two bodies, 3 = one body + g	P57
00012	Specify CSM orbit option	1 = no orbit change, 2 = change orbit to pass over LM	P22

FLAGWORD BIT ASSIGNMENTS (ALPHABETICAL) FOR LUMINARY

ABTTFLG	FW9	B7
ACCSOKAY	FW13	B3
ACC4-2FL	FW13	B11
ACC4OR2X	FW13	B11
ACMODFLG	FW2	B13
ALTSCALE*	FW12	B9
ANTENBIT	FW12	B12
AORBSYST	FW5	B5
AORBTFLG	FW13	B10
AORBTRAN	FW13	B10
APSESW	FW8	B5
APSFLAG	FW10	B13
APSFLBIT	FW10	B13
ASTNBIT	FW7	B12
ASTNFLAG	FW7	B12
ATTFLAG	FW6	B1
ATTFLBIT	FW6	B1
AUTOMBIT	FW12	B2
AUTR1FLG*	FW13	B1
AUTR2FLG*	FW13	B2
AUXFLBIT	FW6	B2
AVEGFBIT	FW7	B5
AVEGFLAG	FW7	B5
AVEMIDSW	FW9	B1
AVFLAG	FW2	B5
CALCMAN2	FW2	B2
CALCMAN3	FW2	B3
CDESBIT	FW12	B15
CDESFLAG	FW12	B15
CMOONFLG	FW8	B12
COGAFLAG	FW8	B4
CONTRLBT	FW10	B2
CSMDOCKD	FW13	B13
CULTFLAG	FW3	B7
DAPBOOLS	FW13	
DBSELECT	FW13	B4
DBSELECT2	FW13	B5
DESIGBIT	FW12	B10
DESIGFLG	FW12	B10
DIDFLBIT	FW1	B14
DIMOFLAG	FW3	B1
DMENFBIT	FW5	B9
DMENFLG	FW5	B9
DRFTBIT	FW2	B15
DRIFTBIT	FW13	B8
DRIFTDFL	FW13	B8
DRIFTFLG	FW2	B15
DSKYFBIT	FW5	B15
D6OR9FLG	FW3	B2
ENGONBIT	FW5	B7
EORADFLAG	FW1	B13
ETPIFLAG	FW2	B7
FINALFLG	FW2	B6
FLAP	FW9	B8
FLPC	FW9	B12
FLPI	FW9	B11
FLRCS	FW9	B10
FLRCSBIT	FW9	B10
FLT59BIT	FW9	B4
FLT59FLG	FW9	B4
FLUNDBIT	FW8	B10
FLUNDISP	FW8	B10
FLVR	FW9	B14
FREEFBIT	FW0	B3
FREEFLAG	FW0	B3
FSPASFLG	FW0	B10
GLOKFAIL	FW3	B14
GMBORBIT	FW6	B10
GMBDRVSW	FW6	B10
GUESSW	FW1	B2
HFAILFLG	FW11	B13
HFLSHBIT	FW11	B1
HFLSHFLG	FW11	B1
IDLEFBIT	FW7	B7
IDLEFLAG	FW7	B7
IGNFLAG	FW7	B13
IGNFLBIT	FW7	B13
IMPULBIT	FW2	B9
IMPULSW	FW2	B9
IMUSE	FW0	B8
IMUSEBIT	FW0	B8
INFINFLG	FW8	B7
INITABIT	FW8	B2
INITALGN	FW8	B2
INTFLBIT	FW10	B14
INTYPFLG	FW3	B4
ITSWICH	FW7	B15
JSWITCH	FW0	B14
LETABBIT	FW9	B9
LETABORT	FW9	B9
LMOONFLG	FW8	B11
LOKONBIT	FW0	B5
LOKONSW	FW0	B5
LOSCMBIT	FW2	B12
LOSCMFLG	FW2	B12
LRALTBIT	FW12	B5
LRBYBIT	FW11	B15
LRBYPASS	FW11	B15
LRINH	FW11	B8
LRINHBIT	FW11	B8
LRPOSBIT	FW12	B6
LRVELFLG*	FW12	B8
LUNAFLAG	FW3	B12
MANUFLAG*	FW7	B14
MGLVFLAG	FW5	B2
MIDAVFLG	FW9	B2
MIDFLAG	FW0	B13
MIDIFLAG	FW9	B3
MKOVBIT	FW4	B3
MOONFLAG	FW0	B12
MRKIDFLG*	FW4	B15
MRKNVBIT	FW4	B9
MRKNVFLG	FW4	B9
MRUPTFLG*	FW4	B5
MUNFLAG	FW6	B8
MUNFLBIT	FW6	B8
MWAITFLG*	FW4	B11
NEEDLBIT	FW0	B4
NEEDLFLG	FW0	B4
NEED2BIT	FW0	B15
NEED2FLG	FW0	B15
NEW1FLG	FW8	B13
NJETSFLG	FW1	B15
NODOBIT	FW2	B1
NOOOFLAG	FW2	B1
NOLRRBIT	FW11	B10
NOLRREAD	FW11	B10
NOPO7BIT	FW3	B11
NORMSW	FW7	B10

*These switches are never called by name.

FLAGWORD BIT ASSIGNMENTS (ALPHABETICAL) FOR LUMINARY

NORRMBIT	FW5	B4
NORRMON	FW5	B4
NOTERBT	FW1	B11
NOTERFLG	FW1	B11
NOTHRBIT	FW5	B12
NOTHROTL	FW5	B12
NOUPFBIT	FW1	B6
NOUPFLAG	FW1	B6
NPGNCSBT	FW13	B1
NRMNVFLAG	FW4	B8
NRMIDFLG*	FW4	B13
NRUPTFLG*	FW4	B4
NR29FBIT	FW3	B11
NTARGFLG	FW6	B3
NWAITFLG*	FW4	B10
ORBWFLAG	FW3	B6
ORDERSW	FW8	B6
OURRCBIT	FW13	B12
PDSPFBIT	FW5	B12
PDSPFLAG	FW5	B12
PFRATBIT	FW2	B4
PFRATFLG	FW2	B4
PINBRFLG	FW4	B6
POOHFLAG	FW3	B15
PRECIFLG	FW3	B8
PRIODBIT	FW4	B14
PRONVFLG	FW4	B7
PSTHIBIT	FW11	B11
PULSEFLG	FW13	B15
PULSES	FW13	B15
P21FLAG	FW0	B11
P21FLBIT	FW0	B11
P25FLAG	FW0	B9
P25FLBIT	FW0	B9
P66PROBT	FW0	B11
P66PROFLG	FW0	B11
P7071FLG	FW9	B13
QUITFLAG	FW9	B5
RADMODES	FW12	
RCDUFBIT	FW12	B7
RCDU0BIT	FW12	B13
REDFLAG	FW6	B6
REDFLBIT	FW6	B6
REFSMBIT	FW3	B13
REFSMFLG	FW3	B13
REINTBIT	FW10	B7
REINTFLG	FW10	B7
REMODBIT	FW12	B14
RENDWBIT	FW5	B1
RENDWFLG	FW5	B1
REPOSBIT	FW12	B11
RHCSCALE	FW13	B7
RNDVZBIT	FW0	B7
RNDVZFLG	FW0	B7
RNGEDBIT	FW11	B4
RNGSCBIT	FW5	B10
RNGSCFLG	FW5	B10
RODFLAG	FW1	B12
RODFLBIT	FW1	B12
ROTFLAG	FW9	B6
RPQFLAG	FW8	B15
RRDATABIT	FW12	B4
RRNBSW	FW0	B6
RRRSBIT	FW12	B3
RVSW	FW7	B9
R04FLAG	FW3	B9
R04FLBIT	FW3	B9
R10FLG	FW0	B2
R10FLBIT	FW0	B2
R12RDBIT	FW11	B3
R61FLAG	FW1	B10
R61FLBIT	FW1	B10
R77FLAG	FW5	B11
R77FLBIT	FW5	B11
SLOPESW	FW1	B3
SNUFFBIT	FW5	B13
SNUFFER	FW5	B13
SOLNSW	FW5	B3
SRCHOBIT	FW2	B14
SRCHOPTN	FW2	B14
STATEBIT	FW3	B5
STATEFLG	FW3	B5
STEERBIT	FW2	B11
STEERSW	FW2	B11
SURFFBIT	FW8	B8
SURFFLAG	FW8	B8
SWANDBIT	FW7	B11
SWANDISP	FW7	B11
S32.1F1	FW6	B15
S32.1F2	FW6	B14
S32.1F3A	FW6	B13
S32.1F3B	FW6	B12
TFFSW	FW7	B1
TRACKBIT	FW1	B5
TRACKFLG	FW1	B5
TURNONBT	FW12	B1
ULLAGER	FW13	B6
ULLAGFLG	FW13	B6
UPDATBIT	FW1	B7
UPDATFLG	FW1	B7
UPLOCBIT	FW7	B4
USEQRJTS	FW13	B14
VEHUPFLG	FW1	B8
VELDABIT	FW11	B7
VERIFBIT	FW7	B3
VFAILFLG	FW11	B14
VFLAG	FW3	B10
VFLSHBIT	FW11	B2
VFLSHFLG	FW11	B2
VINTFLAG	FW3	B3
VXINH	FW11	B12
VXINHBIT	FW11	B12
V37FLAG	FW7	B6
V37FLBIT	FW7	B6
V67FLAG	FW7	B8
V82EMFLG	FW7	B2
XDELVFLG	FW2	B8
XDSPBIT	FW4	B1
XDSPFLAG	FW4	B1
XORFLBIT	FW11	B9
XORFLG	FW11	B9
XOVINFLG	FW13	B9
XOVINHIB	FW13	B9
ZOOMBIT	FW5	B8
ZOOMFLAG	FW5	B8
3AXISBIT	FW5	B6
3AXISFLG	FW5	B6
360SW	FW8	B1

*These switches are never called by name.

FLAGWORD BIT ASSIGNMENTS FOR LUMINARY

(FLAGWORD 0, LOCATION 0074_8)

Bit	Name	1	0
1	P66PROFL P66PROBT	Continue P66 horizontal velocity nulling.	Stop P66 horizontal velocity nulling.
2	R10FLAG R10FLBIT	R10 outputs data to altitude and altitude rate meters only.	Besides outputs to altitude and altitude rates, when set, R10 also outputs data to forward and lateral velocity crosspointer
3	FREEFBIT FREEFLAG	Used by P51-53 in many different routines and by lunar and solar ephemerides.	
4	NEEDLBIT NEEDLFLG	Total attitude error displayed.	A/P following error displayed.
5	LOKONBIT LOKONSW	Radar lock-on desired.	Radar lock-on not desired.
6	RRNBSW	Radar target in N8 coordinates.	Radar target in SM coordinates.
7	RNDVZBIT RNDVZFLG	P20 running (radar in use).	P20 not running.
8	IMUSE IMUSEBIT	IMU in use.	IMU not in use.
9	P25FLAG P25FLBIT	P25 operating.	P25 not operating
10	FSPASFLG	First pass through reposition routine.	Not first pass through reposition routine.
11	P21FLAG P21FLBIT	Succeeding pass through P21; use base vectors already calculated.	First pass through P21; calculate base vectors.
12	MOONFLAG	Moon is sphere of influence.	Earth is sphere of influence.
13	MIDFLAG	Integration with secondary body and solar perturbations.	Integration without solar perturbations.
14	JSWITCH	Integration of W matrix.	Integration of state vector.
15	NEED2BIT NEED2FLG	Display DAP rates on FDAI needles.	Check Bit 4 of this FLAGWORD for display modes (1 or 2).

FLAGWORD BIT ASSIGNMENTS FOR LUMINARY

(FLAGWORD 1, LOCATION 0075_8)

Bit	Name	1	0
1	Not Assigned		
2	GUESSW	No starting value for iteration.	Starting value for iteration exists.
3	SLOPESW	Iterate with bias method in iterator.	Iterate with Regula Falsi method in iterator.
4	Not Assigned		
5	TRACKBIT TRACKFLG	Tracking allowed.	Tracking not allowed.
6	NOUPFBIT NOUPFLAG	Neither CSM nor LM state vector may be updated.	Either state vector may be updated.
7	UPDATBIT UPDATFLG	Updating by marks allowed.	Updating by marks not allowed.
8	VEHUPFLG	CSM state vector being updated.	LM state vector being updated.
9	Not Assigned		
10	R61FLAG R61FLBIT	Run R61 LM.	Run R65 LM.
11	NOTERBT NOTERFL	LM Terrain Model inhibited.	LR Terrain Model permitted.
12	RODFLAG RODFLBIT	If in P66, normal operation continues. Restart clears flag.	If in P66, reinitialization is performed.
13	ERADFLAG	Compute REARTH Fischer ellipsoid.	Use constant REARTH pad radius.
14	DIDFLBIT	Inertial data is available.	Perform data display initialization functions.
15	NJETSFLG	Two-jet RCS burn.	Four-jet RCS burn.

FLAGWORD BIT ASSIGNMENTS FOR LUMINARY

(FLAGWORD 2. LOCATION 0076_8)

Bit	Name	1	0
1	NODOBIT NODOFLAG	V37 not permitted.	V37 permitted.
2	CALCMAN2	Perform maneuver starting procedure.	Bypass starting procedure.
3	CALCMAN3	No final roll.	Final roll is necessary.
4	PFRATBIT PFRATFLG	Preferred attitude computed.	Preferred attitude not computed.
5	AVFLAG	LM is active vehicle.	CSM is active vehicle.
6	FINALFLG	Last pass through rendezvous program computations.	Interim pass through rendezvous program computations.
7	ETPIFLAG	Elevation angle supplied for P34, P74.	TPI time supplied for P34, P74 to compute elevation.
8	XDELVFLG	External Delta V VG computation.	Lambert (aimpoint) VG computation.
9	IMPULBIT IMPULSW	Minimum impulse burn (cutoff time specified).	Steering burn (no cutoff time yet available).
10	Not Assigned		
11	STEERBIT STEERSW	Sufficient thrust is present.	Insufficient thrust is present.
12	LOSCMBIT LOSCMFLG	Line of sight being computed (R21). In R29, RR gyro command loop running.	Line of sight not being computed (R21). In R29, RR gyro command loop off.
13	ACMODFLG	Manual acquisition by Rendezvous Radar.	Auto acquisition by Rendezvous Radar.
14	SRCHOBIT SRCHOPTN	Radar in automatic search option (R24).	Radar not in automatic search option.
15	DRFTBIT DRIFTFLG	T3RUPT calls gyro compensation.	T3RUPT does no gyro compensation.

FLAGWORD BIT ASSIGNMENTS FOR LUMINARY

(FLAGWORD 3, LOCATION 0077_8)

Bit	Name	1	0
1	DIMOFLAG	W matrix is to be used.	W matrix is not to be used.
2	D60R9FLG	Dimension of W is 9 for integration.	Dimension of W is 6 for integration.
3	VINTFLAG	CSM state vector being integrated.	LM state vector being integrated.
4	INTYPFLG	Conic integration.	Encke integration.
5	STATEBIT STATEFLG	Permanent state vector being updated.	Permanent state vector not being updated.
6	ORBWFLAG	W matrix valid for orbital navigation.	W matrix invalid for orbital navigation.
7	CULTFLAG	Star occulted.	Star not occulted.
8	PRECIFLG	Normal integration in P00.	Engages four-time step (P80) logic in integration.
9	R04FLAG R04FLBIT	Alarm 521 suppressed.	Alarm 521 allowed.
10	VFLAG	Less than two stars in the field of view.	Two stars in the field of view.
11	NOP07BIT	System tests not allowed.	System tests allowed.
12	LUNAFLAG	Lunar latitude-longitude.	Earth latitude-longitude.
13	REFSMBIT REFSMFLG	REFSMMAT good (protected from FRESH START).	REFSMMAT no good (protected from FRESH START).
14	GLOKFAIL	GIMBAL LOCK has occurred.	Not in GIMBAL LOCK.
15	POOHFLAG	Inhibit backwards integration.	Allow backwards integration.

FLAGWORD BIT ASSIGNMENTS FOR LUMINARY

(FLAGWORD 4, LOCATION 0100_8)

Bit	Name	1	0
1	XDSPBIT XDSPFLAG	Mark display not to be interrupted.	No special mark information.
2	Not Assigned		
3	MKDVBIT	Mark display over normal.	No mark display over normal.
4	NRUPTFLG*	Normal display interrupted by priority or mark display.	Normal display not interrupted by priority or mark display.
5	MRUPTFLG*	Mark display interrupted by priority display.	Mark display not interrupted by priority display.
6	PINBRFLG	Astronaut has interferred with existing display.	Astronaut has not interferred with existing display.
7	PRONVFLG	Astronaut using keyboard when priority display initiated.	Astronaut not using keyboard when priority display initiated.
8	NRMNVFLG	Astronaut using keyboard when normal display initiated.	Astronaut not using keyboard when normal display initiated.
9	MRKNVBIT MRKNVFLG	Astronaut using keyboard when mark display initiated.	Astronaut not using keyboard when mark display initiated.
10	NWAITFLG*	Higher priority display operating when normal display initiated.	No higher priority display operating when normal display initiated.
11	MWAITFLG*	Higher priority display operating when mark display initiated.	No higher priority display operating when mark display initiated.
12	Not assigned		
13	NRMIDFLG*	Normal display in ENDIDLE.	No normal display in ENDIDLE.
14	PRIDDBIT	Priority display in ENDIDLE.	No priority display in ENDIDLE.
15	MRKIDFLG*	Mark display in ENDIDLE.	No mark display in ENDIDLE.

*These switches are never called by name.

FLAGWORD BIT ASSIGNMENTS FOR LUMINARY

(FLAGWORD 5, LOCATION 0101_8)

Bit	Name	1	0
1	RENDWBIT RENDWFLG	W matrix valid for rendezvous navigation.	W matrix invalid for rendezvous navigation.
2	MGLVFLAG	Local vertical coordinates computed.	Middle gimbal angle computed.
3	SOLNSW	Lambert does not converge, or time-radius nearly circular.	Lambert converges or time-radius noncircular.
4	NORRMBIT NORRMON	Bypass RR gimbal monitor.	Perform RR gimbal monitor.
5	AORBSYST	Prefer P-axis jet pairs 7, 15 and 8, 16.	Prefer P-axis jet pairs 4,12 and 3, 11.
6	3AXISBIT 3AXISFLG	Maneuver specified by three axes.	Maneuver specified by one axis; R60 call VECPOINT.
7	ENGONBIT	Engine turned on.	Engine turned off.
8	ZOOMBIT ZOOMFLAG	Throttleup has occurred in P63.	Throttleup has not occurred in P63.
9	DMENFLG DMENFBIT	Dimension of W is 9 for incorporation.	Dimension of W is 6 for incorporation.
10	RNGSCBIT RNGSCFLG	Scale change has occurred during RR reading.	No scale change has occurred during RR reading.
11	R77FLAG R77FLBIT	R77 is on; suppress all radar alarms and tracker fails.	R77 is not on.
12	NOTHRBIT NOTHROTL	Inhibit full throttle.	Permit full throttle.
13	SNUFFER SNUFFBIT	U, V jets disabled during DPS burns (V65).	U, V jets enabled during DPS burns (V75).
14	PDSFLG PDSPFBT	R60 does priority display and is restart protected.	R60 does normal display and is not restart protected.
15	DSKYFBIT	Displays sent to DSKY.	No displays to DSKY.

FLAGWORD BIT ASSIGNMENTS FOR LUMINARY

(FLAGWORD 6, LOCATION 0102_8)

Bit	Name	1	0
1	ATTFLAG ATTFLBIT	LM attitude exists in moon-fixed coordinates.	No LM attitude available in moon-fixed coordinates.
2	AUXFLBIT	Providing IDLEFLAG is not set, SERVICER will exercise DVMON on its next pass.	SERVICER will skip DVMON on its next pass even if the IDLEFLAG is not set. It will then set AUXFLBIT.
3	NTARGFLG	Astronaut did overwrite Delta V at TPI or TPM (P34, P35).	Astronaut did not overwrite Delta V.
4	Not Assigned		
5	Not Assigned		
6	REDFLAG REDFLBIT	Landing site redesignation permitted.	Landing site redesignation not permitted.
7	Not Assigned		
8	MUNFLAG MUNFLBIT	SERVICER calls MUNRVG.	SERVICER calls CALCRVG.
9	Not Assigned		
10	GMBDRBIT GMBDRVSW	TRIMGIMB over.	TRIMGIMB not over.
11	Not Assigned		
12 13	S32.1F38 S32.1F3A	(Bits 12 and 13 function as an ordered pair (13, 12) indicating the possible occurrence of two Newton iterations for S32.1: (0, 0) — First pass of second Newton iteration, (0, 1) — First Newton iteration being done, (1, 0) — Remainder of second Newton iteration, (1, 1) — 50 ft/s stage of second Newton iteration.)	
14	S32.1F2	First pass of Newton iteration.	Reiteration of Newton.
15	S32.1F1	Delta V at CSI Time 1 exceeds maximum.	Delta V at CSI Time 1 less than maximum.

FLAGWORD BIT ASSIGNMENTS FOR LUMINARY

(FLAGWORD 7, LOCATION 0103_8)

Bit	Name	1	0
1	TFFSW	Calculate TPERIGEE.	Calculate TFF.
2	V82EMFLG	Moon vicinity.	Earth vicinity.
3	VERIFBIT	(Changed when V33E occurs at end of P27).	
4	UPLOCBIT	K-$\overline{K}$-K fail.	No K-$\overline{K}$-K fail.
5	AVEGFBIT AVEGFLAG	AVERAGEG (SERVICER) desired.	AVERAGEG (SERVICER) not desired.
6	V37FLAG V37FLBIT	AVERAGEG (SERVICER) running.	AVERAGEG (SERVICER) off.
7	IDLEFBIT IDLEFLAG	No Delta V monitor.	Connect Delta V monitor.
8	V67FLAG	Astronaut overwrites W-matrix initial values.	Astronaut does not overwrite W-matrix initial values.
9	RVSW	Do not compute final state vector in time-theta.	Compute final state vector in time-theta.
10	NORMSW	Unit normal input to Lambert.	Lambert computes its own normal.
11	SWANDBIT SWANDISP	Landing analog displays enabled.	Landing analog displays suppressed.
12	ASTNBIT ASTNFLAG	Astronaut has OKed ignition.	Astronaut has not OKed ignition.
13	IGNFLAG IGNFLBIT	TIG has arrived.	TIG has not arrived.
14	MANUFLAG*	Attitude maneuver going on during RR search.	No attitude maneuver during RR search.
15	ITSWICH	P34; TPI time to be computed.	TPI has been computed.

*These switches are never called by name.

FLAGWORD BIT ASSIGNMENTS FOR LUMINARY

(FLAGWORD 8, LOCATION 0104_8)

Bit	Name	1	0
1	360SW	Transfer angle near 360 degrees.	Transfer angle not near 360 degrees.
2	INITABIT INITALGN	Initial pass through P57.	Second pass through P57.
3	Not Assigned		
4	COGAFLAG	No conic solution, too close to rectilinear (COGA overflows).	Conic solution exists (COGA does not overflow).
5	APSESW	RDESIRED outside of PERICENTER-APOCENTER range in time-radius.	RDESIRED inside of PERICENTER-APOCENTER range in time-radius.
6	ORDERSW	Iterator uses second order minimum mode.	Iterator uses first order standard mode.
7	INFINFLG	No conic solution (closure through infinity required).	Conic solution exists.
8	SURFFBIT SURFFLAG	LM on lunar surface (protected from FRESH START).	LM not on lunar surface (protected from FRESH START).
9	Not Assigned.		
10	FLUNDBIT FLUNDISP	Current guidance displays inhibited.	Current guidance displays permitted.
11	LMOONFLG	Permanent LM state vector in lunar sphere (protected from FRESH START).	Permanent LM state vector in earth sphere (protected from FRESH START).
12	CMOONFLG	Permanent CSM state vector in lunar sphere (protected from FRESH START).	Permanent CSM state vector in earth sphere (protected from FRESH START).
13	NEWIFLG	First pass through integration.	Succeeding iteration of integration.
14	Not Assigned		
15	RPQFLAG	RPQ not computed. (RPQ = vector between secondary body and primary body.)	RPQ computed.

FLAGWORD BIT ASSIGNMENTS FOR LUMINARY

(FLAGWORD 9, LOCATION 0105_8)

Bit	Name	1	0
1	AVEMIDSW	AVETOMID calling for W-matrix integration. Do not overwrite RN, VN, PIPTIME.	No AVETOMID W-matrix integration. Allow setup of RN, VN, PIPTIME.
2	MIDAVFLG	Integration entered from one of MIDTOAV portals.	Integration was not entered via MIDTOAV.
3	MID1FLAG	Integrate to TDEC.	Integrate to the then-present time.
4	FLT59FLG FLT59BIT	Lunar surface mark procedure used during inflight alignment.	Normal marking to be used during inflight alignment.
5	QUITFLAG	Discontinue integration.	Continue integration.
6	ROTFLAG	P70 and P71 will force vehicle rotation in the preferred direction.	P70 and P71 will not force vehicle rotation in the preferred direction.
7	ABTTFLAG	J2, K2 parameters used for abort targeting.	J1, K1 parameters used for abort targeting.
8	FLAP	APS continued abort after DPS staging (ascent guidance).	APS abort is not a continuation.
9	LETABBIT LETABORT	Abort programs are enabled.	Abort programs are not enabled.
10	FLRCS FLRCSBIT	RCS injection mode (ascent guidance).	Main engine mode.
11	FLPI	Preignition phase (ascent guidance).	Regular guidance.
12	FLPC	No position control (ascent guidance).	Position control.
13	P7071BIT P7071FLG	P70 or P71 is using ascent guidance equations.	P12 is using ascent guidance equations.
14	FLVR	Vertical rise (ascent guidance).	Nonvertical rise.
15	Not Assigned		

FLAGWORO BIT ASSIGNMENTS FOR LUMINARY

(FLAGWORO 10, RASFLAG, LOCATION 0106_8)

Bit	Name	1	0
1	NPGNCSFL NPGNCSBT	Last active DAP. Pass done with an AGS indication.	Last active DAP. Pass done with a PGNCS indication.
2	CONTRLFL CONTRLBT	DAP controlling Vehicle attitude.	OAP not controlling Vehicle attitude.
3-6	Not Assigned		
7	REINTBIT REINTFLG	Integration routine to be RESTARTED.	Integration routine not to be RESTARTED.
8-12	Not Assigned		
13	APSFLAG APSFLBIT	Ascent stage (protected from FRESH START).	Descent stage (protected from FRESH START).
14	INTFLBIT	Integration in progress.	Integration not in progress.
15	Not Assigned		

(FLAGWORO 11, LOCATION 0107_8)

Bit	Name	1	0
1	HFLSHBIT HFLSHFLG	LR altitude fail lamp should be flashing.	LR altitude fail lamp should not be flashing.
2	VFLSHBIT VFLSHFLG	LR velocity fail lamp should be flashing.	LR velocity fail lamp should not be flashing.
3	R12RDBIT	Wait until velocity reads done before R12 processing.	Allow R12 processing of velocity data.
4	RNGEDBIT	LR altitude measurement made.	LR altitude measurement not made.
5-6	Not Assigned		
7	VELDABIT	LR velocity measurement made.	LR velocity measurement not made.
8	LRINH LRINHBIT	LR updates permitted by astronaut.	LR updates inhibited by astronaut.
9	XORFLBIT XORFLG	Below limit; inhibit X-axis override.	Above limit; do not inhibit.
10	NOLRRBIT NOLRREAD	LR repositioning; bypass update.	LR not repositioning.
11	PSTHIBIT	Posthigate.	Prehigate.
12	VXINH VXINHBIT	If Z velocity data unreasonable, bypass X-axis velocity update on next pass.	Update X-axis velocity.
13	HFAILFLG	LR altitude reasonability test failed.	Passed LR altitude reasonability test.
14	VFAILFLG	LR velocity reasonability test failed	Passed LR velocity reasonability test.
15	LRBYBIT LRBYPASS	Bypass all LR updates.	Do not bypass LR updates.

*These switches are never called by name.

FLAGWORD BIT ASSIGNMENTS FOR LUMINARY

(FLAGWORD 12, RADMODES, LOCATION 0110_8)

Bit	Name	1	0
1	TURNONBT	RR turn-on sequence in progress (zero RR CDU's, fix antenna position).	No RR turn-on sequence in progress.
2	AUTOMBIT	RR not in Auto mode. Auto mode discrete is not present.	RR in Auto mode.
3	RRRSBIT	RR range reading on the high scale.	RR range reading on the low scale.
4	RRDATABT	RR data fail. Data could not be read successfully.	No RR data fail.
5	LRALTBIT	LR altitude data fail. Data could not be read successfully.	No LR altitude data fail.
6	LRPOSBIT	LR in Position 2.	LR in Position 1.
7	RCDUFBIT	RR CDU fail has not occurred.	RR CDU fail has occurred.
8	LRVELFLG*	LR velocity data fail.	No LR velocity data fail.
9	ALTSCALE*	LR altitude reading is on high scale.	LR altitude reading is on low scale.
10	DESIGBIT DESIGFLG	RR designate requested or in progress.	RR designate not requested or in progress.
11	REPOSBIT	Reposition monitor, RR reposition is taking place.	No RR reposition taking place.
12	ANTENBIT	RR antenna is in Mode 2.	RR antenna is in Mode 1.
13	RCDU0BIT	RR CDU's being zeroed.	RR CDU's not being zeroed.
14	REMODBIT	Change in antenna mode has been requested.	No remode requested or occurring.
15	CDESBIT CDESFLAG	Continuous designate. LGC commands RR regardless of lock-on.	LGC checks for lock-on when antenna being designated.

*These switches are never called by name.

FLAGWORD BIT ASSIGNMENTS FOR LUMINARY

(FLAGWORD 13, DAPBOOLS, LOCATION 0111_8)

Bit	Name	1	0
1 2	AUTR1FLG* AUTR2FLG*	These bits (2, 1) are used together to indicate astronaut-chosen KALCMANU maneuver rates: (0, 0) = 0.2 deg/second (Bit 2, Bit 1), (0, 1) = 0.5 deg/second, (1, 0) = 2.0 deg/second, (1, 1) = 10.0 deg/second.	
3	ACCSOKAY	Control authority values from 1/ACCS usable.	RESTART or FRESH START since last 1/ACCS; outputs suspect.
4	DBSELECT	1-degree deadband selected by crew.	Minimum deadband selected by crew (0.3 degree).
5	DBSLECT2	5-degree deadband selected by crew (maximum deadband).	1- or 0.3-degree deadband selected by crew (See Bit 4).
6	ULLAGER ULLAGFLG	Ullage request by mission program.	No internal ullage request.
7	RHCSCALE	Normal RHC scaling requested.	Fine RHC scaling requested.
8	DRIFTBIT DRIFTDFL	Assume zero offset drifting flight.	Use offset acceleration estimate.
9	XOVINFLG XOVINHIB	X-axis override locked out.	X-axis override OK.
10	AORBTFLG AORBTRAN	B system for X-translation preferred.	A system for X-translation preferred.
11	ACC4-2FL ACC4OR2X	Four-jet X-axis translation requested.	Two-jet X-axis translation requested.
12	OURRCBIT	Current DAP pass is rate command.	Current DAP pass is not rate command.
13	CSMDOCKD	CSM docked; use backup DAP.	CSM not docked to LM.
14	USEQRJTS	Gimbal unusable; use jets only.	Trim gimbal may be used.
15	PULSEFLG PULSES	Minimum impulse command mode in "attitude hold" (V76).	Not in minimum impulse command mode (V77).

*These switches are never called by name.

FLAGWORD BIT ASSIGNMENTS FOR LUMINARY

IMODES30, a flag whose individual bits are used to control the monitoring of IMU functions associated with Channel 30 (and in a few cases Channel 33). LOCATION 1277_8.

Bit	Meaning
15	Last sampled value of Channel 30, Bit 15 (0 if IMU temperature within limits).
14	Last sampled value of Channel 30, Bit 14 (0 if ISS has been turned on or commanded to be turned on).
13	Last sampled value of Channel 30, Bit 13 (0 if an IMU fail indication has been produced).
12	Last sampled value of Channel 30, Bit 12 (0 if an IMU CDU fail indication has been produced).
11	Last sampled value of Channel 30, Bit 11 (0 if an IMU cage command has been produced by crew).
10	Last sampled value of Channel 33, Bit 10 (0 if a PIPA fail indication has been produced), having the same value as Bit 13 of IMODES33.
9	Last sampled value of Channel 30, Bit 9 (0 if IMU has been turned on and operating with no malfunctions).
8	Bit used to control the IMU turn-on sequencing.
7	Bit used to control the IMU turn-on sequencing.
6	Bit is set to 1 to indicate that IMU initialization is being carried out.
5	Bit is set to 1 to inhibit the generation of program alarm 0212_8 if a PIPA fail signal (Bit 13 of Channel 33) is produced.
4	Bit is set to 1 to inhibit generation of an ISS warning based on receipt of an IMU fail signal.
3	Bit is set to 1 to inhibit generation of an ISS warning based on receipt of an IMU CDU fail signal.
2	Bit is set to 1 to indicate failure of the turn-on delay sequence for IMU turn-on (alarm 0207_8 is also generated).
1	Bit is set to 1 to inhibit generation of an ISS warning based on receipt of a PIPA fail signal (Bit 13 of Channel 33).

FLAGWORD BIT ASSIGNMENTS FOR LUMINARY

!MODES33, a flag whose individual bits are used to control the monitoring of functions associated with Channel 33 (and other items). LOCATION 1300_8

Bit	Meaning
15	Not assigned.
14	Last sampled value of Channel 32, Bit 14 (0 if a Proceed command is given using the old "standby" button).
13	Last sampled value of Channel 33, Bit 13 (0 if an accelerometer fail signal, or PIPA fail, has been produced by hardware).
12	Last sampled value of Channel 33, Bit 12 (0 if a telemetry end pulse has been rejected because the downlink rate is too fast).
11	Last sampled value of Channel 33, Bit 11 (0 if an uplink bit has been rejected because the uplink rate is too fast).
10,9	Not assigned.
8	Bit is set to 1 when R10 routine is initialized during the powered descent trajectory.
7	A switch employed in R10 for alternate computations of altitude rate and altitude. (Not used)
6	Bit is set to 1 to indicate that IMU use for vehicle attitude information should not be attempted.
5	Bit is set to 1 in IMU Zeroing routine external to T4RUPT while zeroing is taking place (for an interval of about 10.56 seconds).
4-2	Not assigned.
1	Bit is set to 1 when a Verb 35 ("lamp test") is received, and reset to 0 about 5 seconds later.

CHANNEL BIT ASSIGNMENT (LM)

INPUT CHANNEL 3

The high order bits of the LGC scaler. The least significant bit is worth 5.12 seconds. The maximum value is equivalent to approximately 29.5 days.

INPUT CHANNEL 4

The lower order bits of the LGC scaler. The least significant bit is worth 1 centisecond. The maximum value is equivalent to 5.12 seconds.

INPUT CHANNELS 3 AND 4

Channels 3 and 4 are sampled as Time 1 and Time 2 and provide the time tags for the downlink lists.

OUTPUT CHANNEL 5

BIT	JET DESIGNATION	JET NO.	(RCS JET FIRINGS) ROTATION EFFECT	TRANSLATION EFFECT
1	B4U	1	+V	-X
2	A4D	2	-V	+X
3	A3U	5	+U	-X
4	B3D	6	-U	+X
5	B2U	9	-V	-X
6	A2D	10	+V	+X
7	A1U	13	-U	-X
8	B1D	14	+U	+X

Bits 9 - 15 not used

OUTPUT CHANNEL 6

BIT	JET DESIGNATION	JET NO.	(RCS JET FIRINGS) ROTATION EFFECT	TRANSLATION EFFECT
1	B3A	7	+P	+Z
2	B4F	3	-P	-Z
3	A1F	15	+P	-Z
4	A2A	11	-P	+Z
5	B2L	12	+P	+Y
6	A3R	8	-P	-Y
7	A4R	4	+P	-Y
8	B1L	16	-P	+Y

LM RCS JET CONTROL AXES

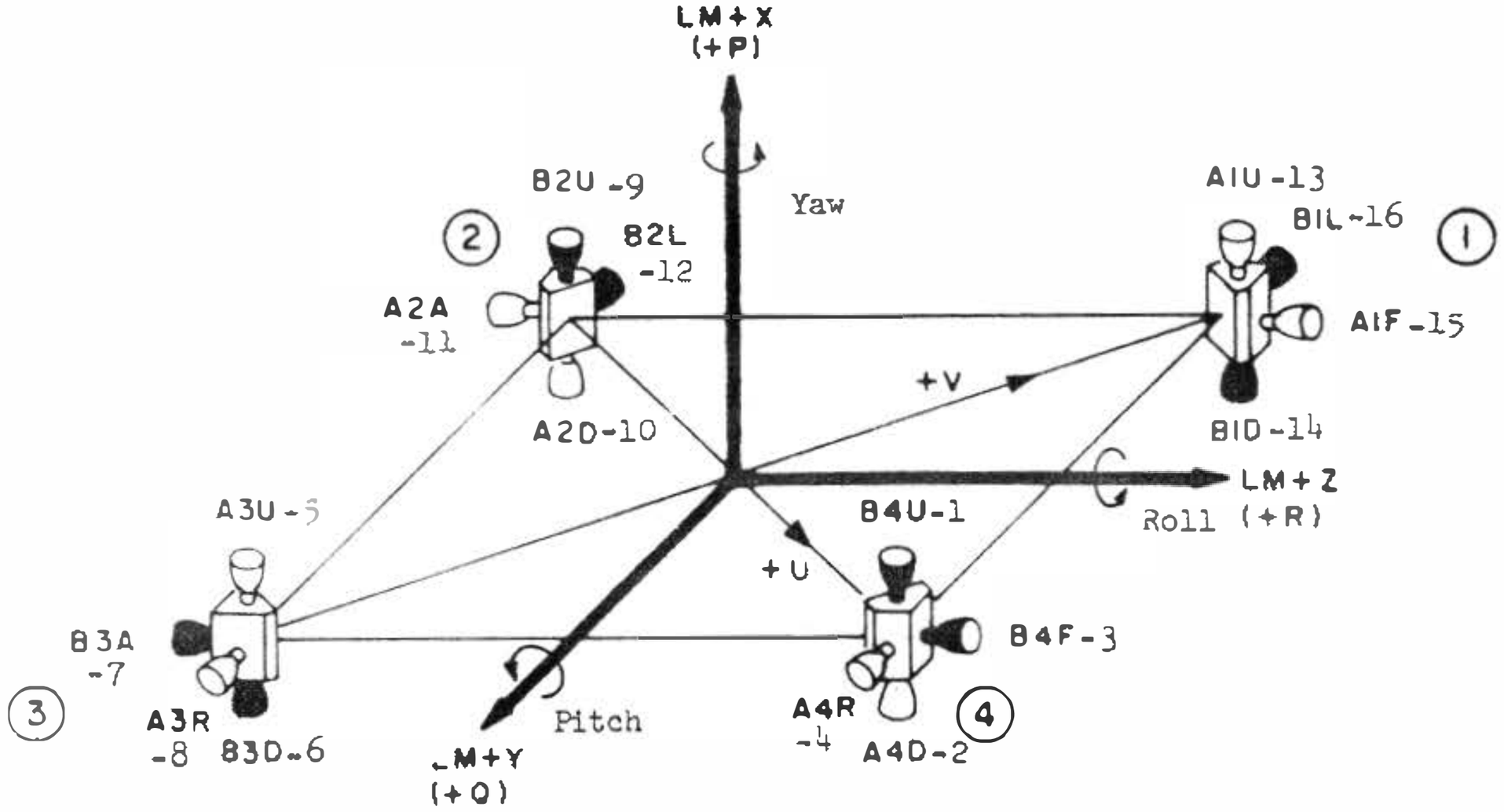

(N) QUADS

SYSTEM "A"

SYSTEM "B"

JET DESIGNATION

A 4 D

RCS FUEL SYSTEM — QUAD — EXHAUST DIRECTION

The P, Q & R axis designations are used with rotations and the X, Y & Z designations are used with translations. U & V are used with both.

The astronaut can disable jets on each QUAD only in pairs and according to RCS fuel systems.

CHANNEL BIT ASSIGNMENTS (LM)

OUTPUT CHANNEL 11

BIT	
1	ISS Warning
2	Light Computer Activity Lamp
3	Light Uplink Activity Lamp
4	Light Temperature Caution Lamp
5	Light Keyboard Release Lamp
6	Flash Verb and Noun Lamps
7	Light Operator Error Lamp
8	Spare
9	Test Connector Outbit
10	Caution Reset
11-12	Spare
13	Engine On
14	Engine Off
15	Spare

OUTPUT CHANNEL 12

BIT	
1	Zero Rendezvous Radar CDU's
2	Enable Rendezvous Radar Error Counters
3	Not Used
4	Coarse Align Enable
5	Zero IMU CDU's
6	Enable IMU Error Counters
7	Spare
8	Display Inertial Data
9	+Pitch Vehicle Motion (-Pitch Gimbal Trim, Bell motion)
10	-Pitch Vehicle Motion (+Pitch Gimbal Trim, Bell motion)
11	+Roll Vehicle Motion (-Roll Gimbal Trim, Bell motion)
12	-Roll Vehicle Motion (+Roll Gimbal Trim, Bell motion)
13	Landing Radar Position 2 Command
14	Rendezvous Radar Enable Auto Track
15	ISS Turn-on Delay Complete

CHANNEL BIT ASSIGNMENTS (LM)

OUTPUT CHANNEL 13

BIT	
1	Radar Select c
2	Radar Select b
3	Radar Select a
4	Radar Activity
5	Inhibit Uplink, Enable Crosslink (should not be set to 1)
6	Block Inlink
7	Downlink Word Order
8	RHC Counter Enable
9	Start RHC Read
10	Test Alarms
11	Enable Standby
12	Reset Trap 31-A
13	Reset Trap 31-B
14	Reset Trap 32
15	Enable T6RUPT

Channel 13 Radar Selections

a	b	c	Function
0	0	0	—
0	0	1	Rendezvous Radar range
0	1	0	Rendezvous Radar range rate
0	1	1	—
1	0	0	Landing Radar X velocity
1	0	1	Landing Radar Y velocity
1	1	0	Landing Radar Z velocity
1	1	1	Landing Radar range

OUTPUT CHANNEL 14

BIT	
1	Outlink Activity (should not be set to 1)
2	Altitude Rate Select
3	Altitude Meter Activity
4	Thrust Drive
5	Spare
6	Gyro Enable
7	Gyro Select b
8	Gyro Select a
9	Gyro Sign Minus
10	Gyro Activity
11	Drive CDU S
12	Drive CDU T
13	Drive CDU Z
14	Drive CDU Y
15	Drive CDU X

Channel 14-Gyro Selection

a	b	Gyro
0	0	—
0	1	X
1	0	Y
1	1	Z

INPUT CHANNEL 15

BIT	
1-5	Key codes from Main DSKY
6-15	Spare

CHANNEL BIT ASSIGNMENTS (LM)

INPUT CHANNEL 16

BIT	
1-2	Spare
3	Mark X
4	Mark Y
5	Mark reject
6	Descent +
7	Descent -
8-15	Spare

INPUT CHANNEL 30

BIT	
1	Abort with Descent Stage
2	Descent Stage Attached
3	Engine Armed
4	Abort with Ascent Stage
5	Auto Throttle
6	Display Inertial Data
7	Rendezvous Radar CDU Fail
8	Spare
9	IMU Operate
10	G/N Control of S/C
11	IMU Cage
12	IMU CDU Fail
13	IMU Fail
14	ISS Turn-On Request
15	Temp in Limits

NOTE:
All of the input signals in Channel 30 are inverted; that is, a ZERO bit indicates that the discrete is ON.

INPUT CHANNEL 31

BIT	
1	+EL (LPD), + PMI
2	-EL (LPD), - PMI
3	+ YMI
4	-YMI
5	+AZ (LPD), +RMI
6	-AZ (LPD), -RMI
7	+X Translation
8	-X Translation
9	+Y Translation
10	-Y Translation
11	+Z Translation
12	-Z Translation
13	Attitude Hold
14	Auto Stabilization
15	Attitude Control Out of Detent

NOTE:
All of the input signals in Channel 31 are inverted; that is, a ZERO bit indicates that the discrete is ON.

CHANNEL BIT ASSIGNMENTS (LM)

INPUT CHANNEL 32

BIT	
1	Thruster 2 — 4 Disabled by Crew
2	Thruster 5 — 8 Disabled by Crew
3	Thruster 1 — 3 Disabled by Crew
4	Thruster 6 — 7 Disabled by Crew
5	Thruster 14 — 16 Disabled by Crew
6	Thruster 13 — 15 Disabled by Crew
7	Thruster 9 — 12 Disabled by Crew
8	Thruster 10 — 11 Disabled by Crew
9	Descent Engine Gimbals Disabled by Crew
10	Apparent Descent Engine Gimbal Fail
11-13	Spare
14	Proceed
15	Spare

NOTE:
All of the input signals in Channel 32 are inverted; that is, a ZERO bit indicates that the discrete is ON.

INPUT CHANNEL 33

BIT	
1	Spare
2	Rendezvous Radar Auto-Power On
3	Rendezvous Radar Range Low Scale
4	Rendezvous Radar Data Good
5	Landing Radar Range Data Good
6	Landing Radar Position 1
7	Landing Radar Position 2
8	Landing Radar Velocity Data Good
9	Landing Radar Range Low Scale
10	Block Uplink Input*
11	Uplink Too Fast
12	Downlink Too Fast
13	PIPA Fail
14	LGC Warning (repeated hardware or software alarms)
15	Oscillator Alarm

*This bit reads ONE when accept uplink signal is present at interface.

NOTE:
All of the input signals in Channel 33 are inverted; that is, a ZERO bit indicates that the discrete is ON. Bits 15-11 are flip-flop bits reset by a channel write command, restart, and T4RUPT loop.

INPUT CHANNEL 77

BIT	
15-10	Spare
9	Scaler Double Frequency
8	Scaler Fail
7	Counter Fail
6	Voltage Fail
5	Night Watchman
4	RUPT Lock
3	TC Trap
2	E Memory Parity Fail
1	E Memory or F Memory Parity Fail

P00—LGC IDLING PROGRAM

Purpose:

1. To maintain the LGC in a condition of readiness for entry into other programs.
2. To update the CSM and LM state vectors every four time steps.

Assumptions:

1. This program is automatically selected by V96E, which may be done during any program. State vector integration is permanently inhibited following V96E. Normal integration functions will resume after selection of any program or extended verb. P00 integration will resume when P00 is reselected. Usage of V96 can cause incorrect W-matrix and state vector synchronization.
2. Program changes are inhibited during integration periods and Program Alarm 1520_8 will occur if a change is attempted when inhibited.

Sequence of Events:

V37E00E			
V06N38E		Optional Display.	
	V06N38	Time of State Vector Being Integrated	00XXX. h 000XX. min 0XX.XX s

P06—LGC POWER DOWN PROGRAM

Purpose:

1. To transfer the LGC from the Operate to the Standby program.

Assumptions:

1. If the computer power is switched off, the LGC Update program (P27) would have to be performed to update the LM and CSM state vectors and computer clock time.
2. The LGC is capable of maintaining an accurate value of ground elapsed time (GET) for only 23 hours when in the Standby mode. If the LGC is not brought out of the standby condition to the running condition at least once within 23 hours, the LGC value of GET must be updated.
3. Once the program has been selected, the LGC must be put in standby. When P06 appears, the LGC will not honor a new program request (V37EXXE), a terminate (V34E), or an enter in response to the request for standby.

Sequence of Events:

V37E06E			
	Flashing V50N25	Checklist Code Power Down LGC	0062 C8(11) IMU Operate-Open (No DAP light on)
PRO		Standby light — on	
PGNS Turn On			C8(11) IMU Operate-Close
	Standby light — on. PRO until Standby light off. No Att light — on (90 seconds)		
V37E00E		Program P00 Chosen	

P12—POWERED ASCENT PROGRAM

Purpose:

1. To control the PGNS during countdown, ignition, thrusting, and thrust termination of PGNS controlled APS powered ascent maneuver from the lunar surface.

P12 (continued)

Assumptions:

1. The LGC has stored injection values which define an ascent trajectory that will result in an orbit coplanar with the CSM orbit and an apolune of 30 nmi. These values at orbit insertion are altitude, distance between the LM and CSM orbital planes, LM vertical (V(R)), LM horizontal (V(Y)), and LM downrange (V(Z)) velocities. All altitudes are measured with respect to the LGC stored landing site vector.

   The predefined ascent trajectory may be partially modified during this program by the astronaut.

2. The PGNS will control the LM ascent maneuver such that the LM injection velocity is in the CSM orbital plane or parallel to it at a distance specified by the astronaut inserted crossrange. The injection conditions can be modified by changing the nominal downrange and radial velocities displayed.

   Crossrange should not be specified so that the ascent trajectory crosses through the CSM orbital plane.

3. Engine ignition may be slipped beyond TIG (AS) if desired by the crew or if the state vector integration cannot be completed in time. Variation of the time of ascent ignition (TIG(AS))changes the relative phasing of the ascent trajectory with respect to the CSM and alters the resultant LM orbit.

4. The initial period of the ascent trajectory consists of two phases:

   a. Vertical Rise Phase. From TIG until the LM radial velocity (V(R)) exceeds 40 ft/s. During this phase, the PGNS holds the LM attitude with the +X axis parallel to the LM position vector at TIG. At TIG, the PGNS commands the LM around its X axis (yaw) until the LM +Z axis points downrange.

   b. Pitchover Phase. When V(R) exceeds 40 ft/s and the LM X axis is within 5 degrees of the desired attitude. During this phase, the PGNS commands the LM to pitch down (about the Y axis) an amount defined by the guidance equations.

5. Normally, the Lunar Surface Align program (P57) has been completed and leaves the IMU aligned at a known orientation.

6. The inertial velocity Y axis will be displayed on the lateral velocity cross pointer and the forward velocity cross pointer will be zeroed during ascent.

7. The X-axis override option provides the crew with the ability to exercise manual control about the LM X axis with the attitude controller even though the PGNS Attitude Control mode is Auto. When the controller returns to detent, the DAP damps the yaw rate, stores the yaw attitude when the rate is damped, and then maintains that attitude.

   This option is inhibited from TIG(AS) until 10 seconds after V(R) equals 40ft/sand the LM yaw attitude is within 5 degrees of the desired pitchover initiation.

8. Either the Load DAP routine (R03) or the Landing Confirmation program has been performed prior to selection of this program. The DAP will be energized when the PGNS Control mode and the Auto Attitude or Attitude Hold Control mode have been selected. If this occurs prior to the PGNS autocheck in this program, the attitude errors will be zeroed and the attitude deadband will be set to the value specified by P68 (5 degrees) or R03 (astronaut defined), whichever occurred more recently. Immediately prior to the PGNS autocheck, this program will set the attitude deadband to 1 degree.

9. If a thrusting maneuver is performed with the Guidance Control switch in PGNS and the Mode Control switch in Auto, the PGNS controls the total vehicle attitude and generates either Mode 1 or Mode 2 attitude errors for display on the FDAI. The crew may exercise control about only the yaw axis with the ACA (X-axis override) provided the X-axis override capability is permitted (see Assumption 7).

   If a thrusting maneuver is performed with the Guidance Control switch in PGNS and the Mode Control switch in Attitude Hold, the PGNS holds the vehicle attitude and generates either Mode 1 or Mode 2 attitude errors for display on the FDAI. The crew may exercise manual control about all vehicle axes with the ACA using either the Rate Command or Minimum Impulse mode. However, it is strongly recommended

P12 (continued)

10. Control of the LM RCS and APS is transferred from the PGNS to the Abort Guidance System (AGS) by changing the Guidance Control switch from PGNS to AGS.

    The AGS is capable of taking control of the LM during any phase of the lunar ascent and guiding it to a safe orbit and should be initialized by manual selection of R47, the AGS Initialization routine, prior to the selection of P12.

    If the Guidance Control switch is changed from PGNS to AGS during a thrusting maneuver, the LGC continues computation of position, velocity, desired thrust vector, and desired attitude errors.

11. The PGNS generates two types of errors for display on the FDAI as selected by the astronaut:

    a. Mode 1 – Selected by Verb 61. Autopilot following errors used as a monitor of the DAP's ability to track automatic steering commands.

    b. Mode 2 – Selected by Verb 62. Total attitude errors used to assist the crew in manually maneuvering the vehicle.

12. This program is selected by the astronaut at least 5 minutes prior to ignition.

Sequence of Events:

V37E 12E			
	Flashing V06N33	Ascent Time of Ignition	00XXX h 000XX min 0XX.XX s
PRO			V25E Load New TIG
	Flashing V06N76	Desired Downrange Velocity Desired Radial Velocity Crossrange	XXXX.X ft/s XXXX.X ft/s XXXX.X nmi
PRO			V23E Load New Crossrange
	Flashing V50N25	Checklist Code	00203
PRO	Switch Guidance Control – PGNS Mode Control – Auto		
	V06N74	Time from Ignition FDAI Yaw – After Vertical Rise FDAI Pitch – After Vertical Rise	XXbXX min/s XXX.XX deg XXX.XX deg
	TFI counts down until TIG -35 seconds, when DSKY blanks for 5 seconds. V06N74 display returns until TIG -5 seconds.		
	Flashing V99N74	Time from Ignition FDAI Yaw – After Vertical Rise FDAI Pitch – After Vertical Rise	XXbXX min/s XXX.XX deg XXX.XX deg
PRO	Astronaut okays ignition. TIG occurs.		
	V06N94	VGX Altitude Rate Computed Altitude	XXXX.X ft/s XXXX.X ft/s XXXXX. ft
N76E			
	V06N76	Desired Downrange Velocity Desired Radial Velocity Crossrange Distance	XXXX.X ft/s XXXX.X ft/s XXXX.X nmi
V16N77E			
	V16N77	Time to Engine Cutoff Velocity Normal to CSM Plane Absolute Value of Velocity	XXbXX min/s XXXX.X ft/s XXXX.X ft/s

P12 (continued)

N85E

V16N85	Velocity to be Gained (X Body)	XXXX.X ft/s
	Velocity to be Gained (Y Body)	XXXX.X ft/s
	Velocity to be Gained (Z Body)	XXXX.X ft/s

Display chosen at velocity to be gained ≅500 ft/s. VG (X Body) monitored to enable APS fuel to be fed to RCS thrusters by astronaut.

Null residual velocities

KEY REL

Flashing	VGX	XXXX.X ft/s
V16N94	Altitude Rate	XXXX.X ft/s
	Computed Altitude	XXXXX. ft

PRO

Flashing	Velocity to be Gained (X Body)	XXXX.X ft/s
V16N85	Velocity to be Gained (Y Body)	XXXX.X ft/s
	Velocity to be Gained (Z Body)	XXXX.X ft/s

V82E

Flashing	Apocenter Altitude	XXXX.X nmi
V16N44	Pericenter Altitude	XXXX.X nmi
	Time from Phase	XXbXX min/s

KEY REL

Flashing	(Same as above)
V16N85	

PRO

Flashing	Select New Program.
V37	

P20—RENDEZVOUS NAVIGATION PROGRAM

Purpose:

1. To control the LM attitude and the Rendezvous Radar (RR) to acquire and track the CSM with the RR while the LM is in flight.
2. To update either the LM or CSM state vector (as specified by the astronaut by DSKY entry) on the basis of RR tracking data or to track the CSM without updating either vehicle state vector.
3. To point the LM optical beacon at the CSM.

Assumptions:

1. The CSM is maintaining a preferred tracking attitude that correctly orients the CSM radar transponder for RR tracking by the LM.
2. At the beginning of the program, the state vector update option is automatically set to the LM. This option may be changed at any time later by one of the following manual entries.
   a. V80E—Update LM state vector,
   b. V81E—Update CSM state vector,
   c. V95E—No state vector update.
3. The initialization of the W matrix is enabled by:
   a. A manual DSKY entry (V93E),
   b. Computer Fresh Start (V36E),
   c. State vector update from the ground (P27) (Except for update of Landing Site vector when the LM is on the lunar surface).
   d. The powered ascent program (P12) invalidates the W matrix used by P22 and causes P20 to reinitialize the W matrix when selected.
4. The RR tracking mark counter counts the number of RR marks processed by the LGC. This counter is zeroed by:
   a. Manual selection of P20/22 (V37E20/22E),
   b. Completion of the Target Delta V program (P76),

c. Selection of a new program from a program which had turned on Average G.
d. Initialization of the W matrix.
e. Completion of RR search routine (R24) in P20.

5. The crew may manually adjust the LGC-stored values of RR shaft and trunnion bias by a direct load of four registers. However, unless the RR has been jarred, the LGC bias estimate should be more accurate than that from another source.

6. The selection and termination of P20, P22, and P25 are subject to special operating procedures different from all other programs:

   a. Selection
      (1) Always by V37EXXE.
      (2) If any other program is running at the time of P20/22/25 selection the new program will replace the old. This includes P20/22/25 selection whenever either P20, 22, or 25 is running.
      (3) If P20 or P25 is running, selection of any program other than P00 or P22 will result in P20 or P25 continuing and the new program also operating with its number in the DSKY program lights.
      (4) If P20 or P25 is running, selection of P00 or P22 will result in the termination of the old program and operation of the new.
   b. Termination
      (1) By selection of P00, V56E, or by V34E.
      (2) P00 selection will terminate P20, 22, and P25 and any other program in process, and establish P00.
      (3) V56E selection will select the Terminate Tracking routine (R56)) which will terminate only P20 or P25 if either of these programs is running in conjunction with another program. In all other cases R56 will select R00. V56E may be performed any time during P20, 22, or 25 operation.
      (4) The LGC will act upon V34E only in response to a flashing verb-noun. If this display was originated by P20, 22, or 25, V34E will result in an identical LGC response to that of V56E; that is, selection of R56. If this display was not originated by P20, 22, or 25 (such as P32, white running with P20), the LGC will go to R00; however, the program in the background will continue. The new program selected follows the selection rules above.

7. The RR Manual Acquisition routine (R23) may be selected only if P20 is not running in conjunction with another program.

8. When P20 is selected any time prior to the landing phase in the lunar mission, this program must be operated in the no update mode to prevent modifying a precision state vector for landing.

9. The RMS position and velocity errors computed from the W matrix are available by Extended Verb (V67E). Based upon values in this display and the details of the mission, the astronaut can elect to stop or continue the current navigation procedure or to reinitialize the W matrix and continue navigating. The capability to reinitialize the W matrix is also provided via V67E.

10. State vector integration may be permanently inhibited by V96E. This entry will terminate all present programs and select the LGC Idling program (P00) with the P00 automatic state vector integration permanently inhibited until selection of another program. Use of V96 can cause incorrect W-matrix extrapolation since state vector synchronization is not maintained.

Sequence of Events:

V37E20E
V80E or V81E or V95E
State Vector Option

V80E – LM, V81E – CSM, V95E – None
RR Mode Switch – in LGC

Flashing	RR Trunnion Angle	XXX.XX deg

P20 (continued)

PRO

If RR locked on and tracking. No Track light out, DSKY blanks RR taking marks.

V16N78E

	Range	XXX.XX nmi
	Range Rate	XXXXX ft/s
	Time from Ignition	XXbXX min/s

KEY REL

Flashing V06N49	Delta R	XXXX.X nmi
	Delta V	XXXX.X ft/s
	Data Source Code	0000X

X = 1 — Range X = 2 — Range Rate X = 3 — Shaft Angle
X = 4 — Trunnion Angle

V32E		Reject partial mark
V34E		Reject total mark
PRO		Update with mark
Flashing V06N49		(see above display)

To terminate: V56E or V37E00E or V34E during a flashing display. To keep P20 running in the background: V37EXXE.

If RR not locked on and pointing angle greater than 15 degrees,

Flashing V50N18	Desired Automaneuver to FDAI Ball Angles	R	XXX.XX deg
		P	XXX.XX deg
		Y	XXX.XX deg

Automaneuver: Guidance Control — PGNS
: Mode Control — PGNS Auto

PRO

V06N18	Desired Automaneuver to FDAI Ball Angles	R	XXX.XX deg
		P	XXX.XX deg
		Y	XXX.XX deg

Monitor maneuver to attitude.
Manual Maneuver: Mode Control — PGNS Attitude Hold, then maneuver.

PRO

Flashing V50N18	Desired Automaneuver to FDAI Ball Angles	R	XXX.XX deg
		P	XXX.XX deg
		Y	XXX.XX deg

When maneuver is complete, by either method, select mode of RR acquisition of CSM.

ENTER

Manual RR acquisition. RR Mode switch: Auto or Slew

Flashing V50N25	Checklist Code	00201

ENTER

Choose RR acquisition mode.

Flashing V50N25	Checklist Code	00205

Perform manual acquisition of CSM with RR. Slew RR for lockon. RR Mode switch — LGC. No Track light is off. Wait 10 seconds.

PRO

Flashing V50N72	Trunnion Angle	XXX.XX deg
	Shaft Angle	XXX.XX deg

Verify main lobe lockon.

P20 (continued)

PRO

DSKY blanks; No Track light is out; RR taking marks.

Flashing V06N49	Delta R	XXXX.X nmi
	Delta V	XXXX.X ft/s
	Data Source Code (see above)	0000X

V32E Reject partial mark.
V34E Reject total mark.
PRO Update with mark.

Flashing V06N49	See above display and response options.	

Automatic RR acquisition.

RR Mode switch — LGC.

Flashing V50N72	Trunnion Angle	XXX.XX deg
	Shaft Angle	XXX.XX deg

PRO

No Track light is on.

Flashing V05N09	Alarm Code	00503

RR data no good for 30 seconds or Designate fails.

V32E

Redesignate to new V50N72 display.

PRO

Start Search mode.

Flashing V16N80	Data Indicator	00000 — Search (42 seconds/scan) 11111 — Lockon
	Angle Between LOS and LM +Z Axis	XXX.XX deg

PRO

When lockon occurs automatically, DSKY blanks; No Track light out; RR taking marks after PRO.

Flashing V06N49	Delta R	XXXX.X nmi
	Delta V	XXXX.X ft/s
	Data Source Code (see above)	0000X

V32E Reject partial mark.
V34E Reject total mark.
PRO Update with mark.

To terminate: V56E or V37E00E, or V34E during a flashing display.

To keep P20 running in the background: V37EXXE.

P21—GROUND TRACK DETERMINATION

Purpose:

1. To provide astronaut with details of his ground track.

Assumptions:

1. Vehicle whose ground track parameters are calculated remains in freefall from start of program until T LAT/LONG.
2. Program may be selected while LM is either in earth or lunar orbit to define ground

P21 (continued)

Sequence of Events:

V37E21E

Flashing	Option Code ID	00002
V04N06	Vehicle Code	0000X (1--LM 2--CSM)

V22EXXE.. Key in vehicle desired.

PRO

Flashing V06N34	Time of LAT/LONG	00XXX. h 000XX. min 0XX.XX s

V25E. Load desired time. (time = 0 specifies present time)

PRO

Flashing	Ground Track Latitude	XXX.XX deg (+ north)
V06N43	Ground Track Longitude	XXX.XX deg (+ east)
	Altitude Above Ground	XXXX.X nmi

N91E

Flashing	Altitude	XXXX.X nmi
V06N91	Velocity	XXXXX. ft/s
	Flight Path Angle	XXX.XX deg

KEY REL

Flashing	Ground Track Latitude	XXX.XX deg (+ north)
V06N43	Ground Track Longitude	XXX.XX deg (+ east)
	Altitude Above Ground	XXXX.X nmi

V32E

Flashing V06N34	Repeat program from Time of LAT/ LONG with new loaded time.

or

PRO

Flashing V37	Select New Program.

P22—LUNAR SURFACE NAVIGATION PROGRAM

Purpose:

1. To control the Rendezvous Radar (RR) to acquire and track the CSM while the LM is on the lunar surface.
2. To update the CSM state vector on the basis of RR tracking data.
3. To track the CSM without updating either vehicle state vector.

Assumptions:

1. Normally the Lunar Surface Alignment program (P57) would be completed before using P22.
2. The CSM may be above or below the horizon, outside the available RR coverage sector, or outside the allowable RR coverage sector.

   The program will always track the CSM with the radar in Mode 2, whose available coverage is always less than horizon to horizon.
3. The CSM is maintaining a preferred tracking attitude that correctly orients the CSM transponder for RR tracking of the LM.

4. At the beginning of the program the state vector update option is automatically set to the CSM, which may be inhibited at any time and later restored by the following manual entries:

   a. V81E – Update CSM state vector.
   b. V95E – No state vector update.

5. The initialization of the W matrix is enabled by:

   a. A manual DSKY entry (V93E).
   b. Computer FRESH START (V36E).
   c. State vector update from the ground (P27).

6. The RR tracking mark counter counts the number of RR marks processed by the LGC. This counter is zeroed:

   a. By manual selection of P20/P22 (V37E20/22E)
   b. Completion of the Target Delta V program (P76).
   c. Selection of a new program from a program which had turned on Average G.
   d. Initialization of the W matrix (Assumption 5).

7. The RMS position and velocity errors computed from the W matrix are available by Extended Verb (V67E). Based upon values in this display and the details of the mission, the astronaut can elect to stop or continue the current navigation procedure or to reinitialize the W matrix and continue navigating. The capability to reinitialize the W matrix is also provided via V67E.

8. The selection and termination of P20, P22, and P25 are subject to special operating procedures different from all other programs:

   a. Selection
      (1) Always by V37EXXE.
      (2) If any other program is running at the time of P20/22/25 selection the new program will replace the old. This includes P20/22/25 selection whenever either P20, 22, or 25 is running.
      (3) If P20 or P25 is running, selection of any program other than P00 or P22 will result in P20 or P25 continuing and the new program also operating with its number in the DSKY program lights.
      (4) If P20 or P25 is running, selection of P00 or P22 will result in the termination of the old program and operation of the new.
   b. Termination
      (1) By selection of P00, V56E, or by V34E.
      (2) P00 selection will terminate P20, P22, and P25 and any other program in process and establish P00.
      (3) V56E selection will select the Terminate Tracking routine (R56) which will terminate only P20 or P25 if either of these programs is running in conjunction with another program. In all other cases R56 will select R00. V56E may be performed any time during P20, 22, or 25 operation.
      (4) The LGC will act upon V34E only in response to a flashing verb-noun. If this display was originated by P20, 22, or 25, V34E will result in an identical LGC response to that of V56E; selection of R56.

      If this display was not originated by P20, 22, or 25 (such as P32, while running with P20) the LGC will go to R00; however, the program in the background will continue. The new program selected follows the selection rules shown above.

9. State vector integration may be permanently inhibited by V96E. This entry terminates all present programs and selects the LGC Idling program (P00) with the P00 automatic state vector integration permanently inhibited until selection of another program. Use of V96 can cause incorrect W-matrix initialization because state vector synchronization is not maintained.

P22 (continued)

Sequence of Events:

V95E
No update of either state vector allowed.

V37E22E

Flashing V04N06	Option Code ID	00012 (CSM orbit option)
	Option	0000X (1 —No orbit change 2 – Change orbit to passover LM)

V22E load desired option

PRO

Flashing V06N33	Time of Ascent Ignition	00XXX. h 000XX. min 0XX.XX s
Flashing V16N54E	Range	XXX.XX nmi
	Range Rate	XXXX.X ft/s
	Theta	XXX.XX deg

If range is greater than 400 nmi and range rate is greater than 0, V56E – exit P22.
If range is greater than 400 nmi and range rate is less than 0 (closing) wait until range is less than 400 nmi.

KEY REL

Flashing V06N33	Time of Ascent Ignition	00XXX. h 000XX. min 0XX.XX s

Automatic Acquisition: RR Mode Switch – LGC; No Track light – out; DSKY – blanks; RR taking marks. (P22 runs in background.)

V16N78E	Range	XXX.XX nmi
	Range Rate	XXXXX. ft/s
	Time from Ignition	XXbXX min/s

KEY REL

V16N72E	RR Trunnion Angle	XXX.XX deg
	RR Shaft Angle	XXX.XX deg

KEY REL

Flashing V06N49	Delta Range	XXXX.X nmi
	Delta Velocity	XXXX.X ft/s
	Radar Data Source Code	0000X (X = 1 range) (X = 2 range rate)

V32E
Reread RR Flashing V06N49 display repeats. Monitor display, PRO when desired to update state vectors.

PRO
Update – DSKY blanks; RR taking marks; P22 runs in the background.

No Track light is on. RR not tracking.

Flashing V05N09	Alarm Code	00503 (RR designate fail)

ENTER	Redesignate to Automatic Acquisition.	
or V56E	Terminate	
or PRO	Search.	
Flashing V16N80	Data Indicator	00000 Search (42 seconds/scan) 11111 Lockon
	Angle Between LOS & LM +Z Axis	XXX.XX deg

PRO

When lockon occurs, return to Automatic Acquisition above.

P25—PREFERRED TRACKING ATTITUDE PROGRAM

Purpose:

1. To compute the preferred tracking attitude of the LM which enables CSM tracking of the beacon and perform the maneuver to that attitude.

Assumptions:

1. During the Rendezvous Navigation program (P20) the LM attitude control is intimately associated with the Rendezvous Radar (RR).Should a RR malfunction preclude correct operation of P20, this program (P25) should be selected to provide a LM preferred tracking attitude.
2. The preferred tracking attitude is defined as follows:
   a. The LM +Z axis is aligned along the LOS to the CSM.
   b. The roll attitude (about LM +Z axis) is unconstrained and is defined as necessary to avoid gimbal lock.
3. Normally the IMU would be on and the IMU Orientation Determination program (P51) completed before using P25. A preferred orientation is not required for this program because the Attitude Maneuver routine (R60) can always calculate a vehicle orientation about the LM +Z axis that can avoid gimbal lock for any IMU inertial orientation.
4. The LM tracking beacon field of view is a 30-degree half-angle cone with the cone axis parallel to the LM +Z axis.
5. The selection and termination of P20, P22, and P25 are subject to special operating procedures different from all other programs.
   a. Selection
      (1) Always by V37EXXE.
      (2) If any other program is running at the time of P20/22/25 selection the new program will replace the old. This includes P20/22/25 selection whenever either P20, 22, or 25 is running.
      (3) If P20 or P25 is running, selection of any program other than P00 or P22 will result in P20 or P25 continuing and the new program also operating with its number in the DSKY program lights.
      (4) If P20 or P25 is running, selection of P00 or P22 will result in the termination of the old program and operation of the new.
   b. Termination
      (1) By selection of P00, V56E, or by V34E.
      (2) P00 selection will terminate P20, 22, and 25 and any other program in process and establish P00.
      (3) V56E will select the Terminate Tracking routine (R56) which will terminate only P20 or P25 if either of these programs is running in conjunction with another program. In all other cases R56 will select R00. V56E may be performed any time during P20, 22, or 25 operation.
      (4) The LGC will act upon V34E only in response to a flashing verb-noun. If this display was originated by P20, 22, or 25, V34E will result in an identical LGC response to that of V56E; that is, selection of R56. If this display was not originated by P20, 22, or 25 (such as P32, while running with P20) the LGC will go to R00. However, the program in the background will continue. The new program selected follows the selection rules above.

Sequence of Events:

V37E25E

Flashing V50N18	Desired Automaneuver FDAI Angles	R	XXX.XX deg
		P	XXX.XX deg
		Y	XXX.XX deg

For Automaneuver: Guidance Control — PGNS
Mode Control — PGNS Auto

For Manual Maneuver: Guidance Control — PGNS
Mode Control — PGNS Attitude Hold

P25 (continued)

PRO

V06N18	Desired Automaneuver FDAI Angles	R	XXX.XX deg
		P	XXX.XX deg
		Y	XXX.XX deg

For Automaneuver: V06N18 Display, For Manual Maneuver: Flashing V50N18 Display.

V37EXXE
or
ENTER

P25 continues in background until terminated by V56E.

P27—LGC UPDATE

Purpose

1. To enter data into the LGC via the digital uplink or by crew input via the DSKY.

Assumptions:

1. LGC updates are of four categories:
   a. Provide a decrement for the LGC clock and the orbital integration state vector time tags, and an increment for TEPHEM (V70).
   b. Provide load capability for a block of sequential erasable locations (1 through 18 whose addresses are specified) (V71).
   c. Provide load capability for individual erasable locations (1 through 9) (V72).
   d. Provide an octal increment for the LGC clock only (V73).
2. The uplink may be blocked by placing the Voice/Off/Voice BU switch to Voice BU.
3. Update is allowed in the LM only when the LGC is in the LGC Idling program (P00). P27 exit is always to P00.

P30—EXTERNAL DELTA V PROGRAM

Purpose:

1. To accept targeting parameters obtained from a source(s) external to the LGC and compute therefrom the required velocity and other initial conditions required by the LGC for execution of the desired maneuver. The targeting parameters inserted into the LGC are the time of ignition (TIG) and the impulsive Delta V along LM local vertical axes at TIG.

Assumptions:

1. The target parameters (TIG and Delta V(LV)) may have been loaded from the ground during a prior execution of P27.
2. The External Delta V flag is set during this program to designate to the thrusting program that External Delta V steering is to be used.
3. The ISS need not be on to complete this program unless the Rendezvous Radar is to be used for automatic state vector updating by the Rendezvous Navigation program (P20).
4. The Rendezvous Radar may or may not be used to update the LM or CSM state vectors for this program. If radar use is desired, the ISS should be in operation and the radar should have been turned on and locked on the CSM by previous selection of P20. Radar sighting marks will be made automatically approximately once a minute when enabled by the Track and Update flags.
5. This program is applicable in either earth or lunar orbit.

P30 (continued)

Sequence of Events:

V37E30E

Flashing V06N33	Time of Ignition	00XXX. h 000XX. min 0XX.XX s

V25E Load New TIG

PRO

Flashing V06N81	Components of ΔV (LV)	X XXXX.X ft/s Y XXXX.X ft/s Z XXXX.X ft/s

V25E Load Desired ΔV

PRO

Flashing V06N42	Apocenter Altitude Pericenter Altitude ΔV (Required)	XXXX.X nmi XXXX.X nmi XXXX.X ft/s

PRO

Flashing V16N45	Marks Time Until Next Burn Middle Gimbal Angle	XXXXX marks XXbXX min/s XXX.XX deg

PRO Middle gimbal set to -00002 if REFSMMAT flag is not set.

Flashing Select New Program
V37

P32–LM COELLIPTIC SEQUENCE INITIATION (CSI) PROGRAM

Purpose:

1. To calculate parameters associated with the following concentric flight plan maneuvers: the Coelliptic Sequence Initiation (CSI) and the Constant Delta Altitude maneuver (CDH), for Delta V burns.
2. To store the CSI target parameters for use by the desired thrusting program.

Assumptions:

1. At a selected TPI time the line of sight between the LM and the CSM is selected to be a prescribed angle (E) from the horizontal plane defined at the active position.
2. The time between CSI ignition and CDH ignition must be computed to be greater than 10 minutes for successful completion of the program.
3. The time between CDH ignition and TPI ignition must be computed to be greater than 10 minutes for successful completion of the program.
4. CDH Delta V is selected to minimize the variation of the altitude difference between the orbits.
5. CSI burn is defined such that the impulsive Delta V is in the LM horizontal plane at CSI ignition.
6. The pericenter altitude of the orbit following CSI and CDH must be greater than 35,000 ft (lunar orbit) or 85 nmi (earth orbit) for successful completion of this program.
7. The CSI and CDH maneuvers are originally assumed to be parallel to the plane of the CSM orbit. However crew modification of Delta V (LV) components may result in an out-of-plane CSI maneuver.

P32 (continued)

8. The Rendezvous Radar may or may not be used to update the LM or CSM state vectors for this program. If radar use is desired the radar was turned on and locked on the CSM by previous selection of P20. Radar sighting marks will be made automatically approximately once a minute when enabled. The rendezvous tracking mark counter is zeroed by the selection of P20 and after each thrusting maneuver.

9. The ISS need not be on to complete this program unless the Rendezvous Radar is to be used for automatic state vector updating by the Rendezvous Navigation program (P20). P20 will define the status of the ISS.

Sequence of Events:

V37E32E

Flashing V06N11	Time of CSI Ignition/T(APOAPSIS)	00XXX. h 000XX. min 0XX.XX s

V25E Load desired CSI TIG or time of APOAPSIS

PRO

Flashing V06N55	Number of Apsidal Crossings Elevation Angle Central Angle of Passive Vehicle	0000X XXX.XX deg XXX.XX deg

V25E. Load desired data.

Apsidal crossing is the future line of apsis of the active vehicle.

Elevation angle is the angle between the LM/CSM LOS and the LM local horizontal plane. CENTANG is an option code where R3 ≠ 0 specifies TIG(CDH) to occur at N(180) degrees from CSI maneuver and N = number entered in R1.

For CSM solution (P72), angle is between CSM/LM LOS and the CSM horizontal.

PRO

Flashing V06N37	Time of TPI Ignition	00XXX. h 000XX. min 0XX.XX s

V25E Load desired TPI TIG.

PRO

Flashing V16N45	Marks Time from Ignition of Next Burn Middle Gimbal Angle	XXXXX XXbXX min/s -00001

PRO Set Final flag.

V32E continues in program but Final flag is not set. Used when another pass is desired.

Alarm codes 00600 through 00606 may occur. If an alarm occurs, V32E recycles to V06N11 where the input parameters may be adjusted for a new solution.

Flashing V06N75	Delta Altitude (CDH) ΔT (CSI - CDH) ΔT (CDH - TPI)	XXXX.X nmi XXbXX min/s XXbXX min/s

PRO

Flashing V06N81	ΔV_X (LV) for CSI ΔV_Y (LV) for CSI ΔV_Z (LV) for CSI	XXXX.X ft/s XXXX.X ft/s XXXX.X ft/s

V90E To correct for out-of-plane velocity on final pass.

Flashing V06N16	Time of Event	00XXX.h 000XX. min 0XX.XX s

V25E Load desired TIG.

PRO

P32 (continued)

Flashing	Out-of-Plane Distance	XXX.XX nmi
V06N90	Out-of-Plane Velocity (YDOT)	XXXX.X ft/s
	Psi	XXX.XX deg

Record out-of-plane velocity.

PRO

Flashing	ΔV_X (LV) for CSI	XXXX.X ft/s
V06N81	ΔV_Y (LV) for CSI	XXXX.X ft/s
	ΔV_Z (LV) for CSI	XXXX.X ft/s

V22E Load – YDOT recorded above.

PRO

Flashing	ΔV_X (LV) for CDH	XXXX.X ft/s
V06N82	ΔV_Y (LV) forCDH	XXXX.X ft/s
	ΔV_Z (LV) forCDH	XXXX.X ft/s

PRO If Final flag is set, go to previous flashing V16N45.

Flashing	Marks	XXXXX.
V16N45	Time from Ignition	XXbXX min/s
	Middle Gimbal Angle	XXX.XX deg

Middle gimbal angle (MGA) will be MGA at TGI(CSI).

If the IMU is not aligned, MGA will be -00002.

For CSM solution (P72), MGA is always -00002 on the final pass.

PRO

Flashing	Select New Program
V37	

P33–LM CONSTANT DELTA ALTITUDE (CDH) PROGRAM

Purpose:

1. To calculate parameters associated with the Constant Delta Altitude maneuver (CDH), for Delta V burns.

Assumptions:

1. This program is based upon previous completion of the Coelliptic Sequence Initiation (CSI) program (P32). Therefore:
   a. At a selected TPI time (now in storage) the line of sight between the LM and the CSM was selected to be a prescribed angle (E) (now in storage) from the horizontal plane defined at the active position.
   b. The time between CSI ignition and CDH ignition was computed to be greater than 10 minutes.
   c. The time between CDH ignition and TPI ignition was computed to be greater than 10 minutes.
   d. The variation of the altitude difference between the orbits was minimized.
   e. CSI burn was defined such that the impulsive Delta V was in the LM horizontal plane at CSI ignition.
   f. The pericenter altitudes of the orbits following CSI and CDH were computed to be greater than 35,000 ft (lunar orbit) or 85 nmi for earth orbit.
   g. The CSI and CDH maneuvers were assumed to be parallel to the plane of the CSM orbit. However, crew modification of Delta V (LV) components may have resulted in an out-of-plane CSI maneuver.
2. The Rendezvous Radar may or may not be used to update the LM or CSM state vectors for this program. If radar use was desired the radar was turned on and locked on the CSM by previous selection of P20. Radar sighting marks will be made automatically approximately once a minute when enabled. The rendezvous tracking mark counter is zeroed by the selection of P20 and after each thrusting maneuver.

P33 (continued)

3. The ISS need not be on to complete this program unless automatic state vector updating is desired by the Rendezvous Navigation program (P20). If selected, P20 will define the status of the ISS.

Sequence of Events:

V37E33E

Flashing V06N13	Time of Ignition (CDH)	00XXX h 000XX min 0XX.XXs

V25E Load desired TIG.

PRO

Flashing V16N45	Marks	XXXXX
	Time from Ignition	XXbXX min/s
	Middle Gimbal Angle	·00001

PRO Set Final flag.

V32E continues in program but Final flag is not set. Used when another pass is desired.

If an alarm occurs, a V32E may be used to recycle the V06N13 and readjust TIG.

Flashing V06N75	Delta Altitude (CDH)	XXXX.X nmi
	ΔT (TPI - CDH)	XXbXX min/s
	ΔT (TPI - Nom TPI)	XXbXX min/s

PRO

Flashing V06N81	ΔV_X (LV) for CDH	XXXX.X ft/s
	ΔV_Y (LV) forCDH	XXXX.X ft/s
	ΔV_Z (LV) for CDH	XXXX.X ft/s

To correct for out-of-plane velocity on final pass.

V90E

Flashing V06N16	Time of Event	00XXX. h 000XX. min 0XX.XX s

V25E Load desired TIG.

PRO

Flashing V06N90	Out-of-plane Distance	XXX.XX nmi
	Out-of-plane Velocity (YDOT)	XXXX.X ft/s
	Psi	XXX.XX deg

Record out-of-plane velocity.

PRO

Flashing V06N81	ΔV_X (LV) for CSI	XXXX.X ft/s
	ΔV_Y (LV) forCSI	XXXX.X ft/s
	ΔV_Z (LV) forCSI	XXXX.X ft/s

V22E Load – YDOT recorded above.

PRO If Final flag is not set, go to previous flashing V16N45 display.

Flashing V16N45	Marks	XXXXX
	Time from Ignition	XXbXX min/s
	Middle Gimbal Angle	XXX.XX deg

Middle gimbal angle (MGA) will be MGA at TIG(CDH).

If the IMU is not aligned, MGA will be ·00002.

For CSM solution (P73) MGA is always ·00002 on the final pass.

PRO

Flashing V37	Select New Program

P34—LM TRANSFER PHASE INITIATION (TPI) PROGRAM

Purpose:

1. To calculate the required Delta V and other initial conditions required by the LGC for LM execution of the transfer phase initiation (TPI) maneuver. Given:
   a. Time of ignition (TIG(TPI)) or the elevation angle (E) of the LM/CSM LOS at TIG(TPI).
   b. Central angle of transfer (CENTANG) from TIG(TPI) to intercept time (TIG(TPF)).
2. To calculate TIG(TPI) given E or E given TIG(TPI).

Assumptions:

1. This program is based upon previous completion of the Constant Delta Altitude (CDH) program (P33). Therefore:
   a. At a selected TPI time (now in storage) the line of sight between the LM and the CSM was selected to be a prescribed angle (E) (now in storage) from the horizontal plane defined at the LM position.
   b. The time between CDH ignition and TPI ignition was computed to be greater than 10 minutes.
   c. The variation of the altitude difference between the orbits was minimized.
   d. The pericenter altitudes of the orbits following CSI and CDH were computed to be greater than 35,000 ft (lunar orbit) or 85 nmi (earth orbit).
   e. The CSI and CDH maneuvers were assumed to be parallel to the plane of the CSM orbit. However, crew modification of Delta V (LV) components may have resulted in an out-of-plane CDH maneuver.
2. The Rendezvous Radar may or may not be used to update the LM or CSM state vectors for this program. If radar use is desired the radar was turned on and locked on the CSM by previous selection of P20. Radar sighting marks will be made automatically approximately once a minute when enabled. The rendezvous tracking mark counter is zeroed by the selection of P20 and after each thrusting maneuver.
3. The ISS need not be on to complete this program unless automatic state vector updating is desired by the Rendezvous Navigation program (P20). If selected, P20 will define the status of the ISS.
4. Once the parameters required for computation of the maneuver have been completely specified, the value of the active vehicle central angle of transfer is computed and stored. This number will be available for display to the astronaut through the use of V06 N52.

   The astronaut would call this display to verify that the central angle of transfer of the active vehicle is not within 170 to 190 degrees. If the angle is within this zone the astronaut should reassess the input targeting parameters based upon Delta V and expected maneuver time.

Sequence of Events:

V37E34E

Flashing V06N37	Time of Ignition (TPI)	00XXX. h 000XX. min 0XX.XX s

V25E Load desired TIG.

PRO

Flashing V06N55	Number of Precision Offsets	0000X
	Elevation Angle	XXX.XX deg
	Central Angle of Passive Vehicle	XXX.XX deg

V25E. Load desired data.

Number of precision offsets is an integration code where X = 0 specifies integration of a conic trajectory to generate the target vector and, if X ≠ 0, specifies precision integration to integrate the target vector. If precision integration is desired, X should = 2.

P34 (continued)

Elevation angle (E) is the angle between the LM/CSM LOS and the LM local horizontal at TIG(TPI). E should be = ±00000 if E is to be computed for the specified TIG.

For CSM solution (P74) the angle is between the CSM/LM LOS and the CSM local vertical at TIG.

PRO

Flashing	Marks	XXXXX
V16N45	Time from Ignition	XXbXX min/s

V32E continues the program but Final flag is not set. Used when another pass is desired.

PRO Set Final flag.

If elevation angle for given TIG is to be computed.

Flashing V06N55	Same as N55 above except elevation angle has been computed.	

TIG for given elevation angle if elevation angle above was ≠ 0.

Flashing V06N37	Time of Ignition	00XXX. h 000XX. min 0XX.XX s

PRO

Flashing	Pericenter Altitude	XXXX.X nmi
V06N58	Delta V (TPI)	XXXX.X ft/s
	Delta V (TPF)	XXXX.X ft/s

PRO

Flashing	ΔV_X (LV) for TPI	XXXX.X ft/s
V06N81	ΔV_Y (LV) for TPI	XXXX.X ft/s
	ΔV_Z (LV) for TPI	XXXX.X ft/s

PRO

Flashing	ΔV_X (LOS) for TPI	XXXX.X ft/s
V06N59	ΔV_Y (LOS) for TPI	XXXX.X ft/s
	ΔV_Z (LOS) for TPI	XXXX.X ft/s

PRO

Flashing	Marks	XXXXX
V16N45	Time from Ignition	XXbXX min/s
	Middle Gimbal Angle	XXX.XX deg

PRO

Flashing V37	Select New Program

P35—LM TRANSFER PHASE MIDCOURSE (TPM) PROGRAM

Purpose:

1. To calculate the required Delta V and other initial conditions required by the LGC for LM execution of the next midcourse correction of the transfer phase of an active LM rendezvous.

Assumptions:

1. The ISS need not be on to complete this program unless automatic state vector updating is desired by the Rendezvous Navigation program (P20). If selected, P20 will define the status of the ISS.

P35 (continued)

2. The Rendezvous Radar is on and is locked on the CSM. This was done during previous selection of P20. Radar sighting marks will be made automatically approximately once a minute when enabled. The rendezvous tracking mark counter is zeroed by the selection of P20 and after each thrusting maneuver.
3. The time of intercept (T(INT)) was defined by previous completion of the Transfer Phase Initiation (TPI) program (P34) and is presently available in LGC storage.
4. Once the parameters required for computation of the maneuver have been completely specified, the value of the active vehicle central angle of transfer is computed and stored. This number will be available for display to the astronaut through the use of V06 N52.

   The astronaut would call this display to verify that the central angle of transfer of the active vehicle is not within 170 to 190 degrees. If the angle is within this zone the astronaut should reassess the input targeting parameters based upon Delta V and expected maneuver time.

Sequence of Events:

V37E35E

Flashing	Marks	XXXXX
V16N45	Time from Ignition	XXbXX min/s
	Middle Gimbal Angle	-00001

Middle Gimbal Angle (MGA) is -1 until the final pass through the program.

PRO

Flashing	ΔV_X (LV) for TPM	XXXX.X ft/s
V06N81	ΔV_Y (LV) for TPM	XXXX.X ft/s
	ΔV_Z (LV) for TPM	XXXX.X ft/s

PRO

Flashing	Marks	XXXXX
V16N45	Time from Ignition	XXbXX min/s
	Middle Gimbal Angle	XXX.XX deg

PRO

Flashing	Select New Program
V37	

P40–DPS PROGRAM

Purpose:

1. To compute a preferred IMU orientation and a vehicle attitude for a LM DPS thrusting maneuver and to maneuver the vehicle to that attitude.
2. To contol the PGNS during countdown, ignition, thrusting, and thrust termination of a PGNS controlled DPS maneuver.

Assumptions:

1. The target parameters have been calculated and stored in the LGC by prior execution of a prethrusting program.
2. The required steering equations are identified by the prior prethrust program, which either reset ("ASTEER") or set (External Delta V) the External V flag. For External Delta V steering, VG is calculated once for the specified time of ignition. Thereafter both during DPS thrusting and until the crew notifies the LGC that RCS trim thrusting has been completed, the LGC updates VG only as a result of accelerometer inputs.

P40 (continued)

For steering control when using "ASTEER," the velocity required is calculated from the most recent intercept trajectory semimajor axis. The Lambert routine periodically recomputes the intercept trajectory semimajor axis for the "ASTEER" calculations. The interval between Lambert solutions is controlled by an erasable load value (UT).

3. Engine ignition may be slipped beyond the established TIG if desired by the crew, or if state vector integration cannot be completed in time.

4. If a thrusting maneuver is performed with the Guidance Control Switch in PGNS and the Mode Control Switch in Auto, the PGNS controls the total vehicle attitude and generates either Mode 1 or Mode 2 attitude errors for display on the FDAI. The crew may exercise control about only the yaw axis with the ACA (X-axis override) provided the X-axis override capability is permitted.

   If a thrusting maneuver is performed with the Guidance Control switch in PGNS and the Mode Control switch in Attitude Hold, the PGNS holds the vehicle attitude and generates either Mode 1 or Mode 2 attitude errors for display on the FDAI. The crew may exercise manual control about the vehicle axes with the ACA using either the Rate Command or Minimum Impulse mode. However, it is strongly recommended that powered flight not be attempted in the Minimum Impulse mode.

   If the Guidance Control switch is changed from PGNS to AGS during a thrusting maneuver, the LGC continues computation of position, velocity, desired thrust vector, and desired attitude errors.

5. The PGNS generates two types of errors for display on the FDAI as selected by the astronaut.

   a. Mode 1 – Selected by Verb 61. Autopilot following errors used as a monitor of the DAP's ability to track automatic steering commands.

   b. Mode 2 – Selected by Verb 62. Total attitude errors used to assist the crew in manually maneuvering the vehicle.

6. The X-axis override option provides the crew with the ability to exercise manual control about the LM X axis with the attitude controller even though the PGNS Attitude Control mode is Auto. When the controller is returned to detent the DAP damps the yaw rate, stores the yaw attitude when the yaw rate is damped, and then maintains that attitude.

   The X-axis override option is always available to the crew. However, it should not be exercised when the LGC is specifying a desired yaw attitude; that is, during the attitude maneuver to the thrusting attitude.

7. When the thrust/translation controller is set to minimum thrust position and the LGC throttle command is zero, the DPS will start at 10 percent thrust.

8. The Load DAP Data routine (R03) has been performed prior to selection of this program and the DPS engine gimbal has been previously driven to the correct trim position. If this burn is of sufficient duration that vehicle transients at ignition due to CG/thrust do not affect accomplishment of maneuver aim conditions, then the gimbal need not be driven to the trim position before TIG. Driving the gimbal to the trim position in worst case conditions could require 2 minutes.

9. During DPS burns only, the pitch-roll RCS jet autopilot (U and V jets) may be disabled by (V65) or enabled by (V75). This capability is intended to be used to prevent LM and descent stage thermal constraint violations during CSM-docked DPS burns (P40). The capability exists during P63 and P70 also. Performance of FRESH START (V36E) will always enable the capability in the autopilot.

10. The LGC will neither designate nor read the Rendezvous Radar (RR) during this program.

11. This program should be selected by the astronaut by DSKY entry at least 5 minutes before the estimated time of ignition.

12. The value of Delta V required will be stored in the local vertical coordinate system and is available during this program by keying V06 N81E.

P40 (continued)

Sequence of Events:

V37E40E

	Flashing V50N18	Desired Automaneuver to FDAI Ball Angles	R XXX.XX deg P XXX.XX deg Y XXX.XX deg

Automaneuver: Guidance Control – PGNS
Mode Control – PGNS Auto

PRO

Monitor automatic maneuver to attitude.

V06N18	Desired Automaneuver to FDAI Ball Angles	R XXX.XX deg P XXX.XX deg Y XXX.XX deg

Manual Maneuver: Guidance Control – PGNS
Mode Control – PGNS Attitude Hold

Maneuver to V50N18 displayed angles.

ENTER

Flashing V50N25	Checklist Code	00203

Please switch to: Guidance Control – PGNS
Attitude Control – Auto
Throttle Switch – Auto

ENTER

V06N40	Time from Ignition (TFI)	XXbXX min/s
	Magnitude of Velocity to be Gained	XXXX.X ft/s
	ΔV (accumulated)	XXXX.X ft/s

TFI counts down until TIG -35 seconds, when DSKY blanks for 5 seconds. V06N40 display returns until TIG -5 seconds.

TIG - 15 seconds. R3 should be less than 00005.
TIG - 7.5 seconds. Verify +X ullage.
TIG -5 seconds

Flashing V99N40	Time from Ignition	XXbXX min/s
	Magnitude of Velocity to be Gained	XXXX.X ft/s
	ΔV (accumulated)	XXXX.X ft/s

PRO Astronaut okays ignition. TIG occurs.

V06N40	Time from Engine Cutoff	XXbXX min/s
	Velocity to be Gained	XXXX.X ft/s
	ΔV (accumulated)	XXXX.X ft/s
Flashing V16N40	Time from Engine Cutoff	XXbXX min/s
	Velocity to be Gained	XXXX.X ft/s
	ΔV (accumulated)	XXXX.X ft/s

Turn off DPS engine:
Push ENG STOP
Switch ENG ARM to OFF

PRO

Flashing V16N85	VG_X (body)	XXXX.X ft/s
	VG_Y (body)	XXXX.X ft/s
	VG_Z (body)	XXXX.X ft/s

Null residual velocities.

PRO

Flashing V37	Select New Program	

P41-RCS PROGRAM

Purpose:

1. To compute a preferred IMU orientation and a vehicle attitude for an RCS thrusting maneuver and to perform the vehicle maneuver to that attitude.
2. To provide suitable displays for manual execution of the thrusting maneuver in the Attitude Hold mode.

Assumptions:

1. The target parameters have been calculated and stored in the LGC by prior execution of a prethrusting program.
2. The required steering equations are identified by the prior prethrust program, which either reset ("ASTEER") or set (External Delta V) the External Delta V flag. For External Delta V steering, VG is calculated once for the specified time of ignition. Thereafter until the crew notifies the LGC that RCS thrusting has been completed, the LGC updates VG only as a result of accelerometer inputs.

   For steering control when using "ASTEER," the velocity required is calculated from the most recent intercept trajectory semimajor axis. The Lambert routine periodically recomputes the intercept trajectory semimajor axis for the "ASTEER" calculations. The interval between Lambert solutions is controlled by an erasable load value (UT).
3. RCS ignition may be slipped beyond the established TIG if desired by the crew, or if state vector integration cannot be completed on time.
4. If a thrusting maneuver is performed with the Guidance Control switch in PGNS and the Mode Control switch in Attitude Hold, the PGNS holds the vehicle attitude and generates either Mode 1 or Mode 2 attitude errors for display on the FDAI. The crew may exercise manual control about all vehicle axes with the ACA using either the Rate Command or Minimum Impulse mode. However, it is strongly recommended that powered flight not be attempted in the Minimum Impulse mode.
5. The PGNS generates two types of errors for display on the FDAI as selected by the astronaut.
   a. Mode 1 — Selected by Verb 61. Autopilot following errors used as a monitor of the DAP's ability to track automatic steering commands.
   b. Mode 2 — Selected by Verb 62. Total attitude errors used to assist the crew in manually maneuvering the vehicle.
6. The X-axis override option provides the crew with the ability to exercise manual control about the LM X axis with the attitude controller even though the PGNS Attitude Control mode is Auto. When the controller is returned to detent, the DAP damps the yaw rate, stores the yaw attitude when the yaw rate is damped, and then maintains that attitude.

   The X-axis override option is always available to the crew. However, it should not be exercised when the LGC is specifying a desired yaw attitude; that is, during the attitude maneuver to the thrusting attitude.
7. The Load DAP Data routine (R03) has been performed prior to selection of this program.
8. The LGC will neither designate nor read the Rendezvous Radar (RR) during this program.
9. This program should be selected by the astronaut by DSKY entry at least 5 minutes before the estimated time of ignition.
10. The value of Delta V required will be stored in the local vertical system and is available in this program until Average G turns on by keying in V06N81E.

Sequence of Events

V37E41E

Flashing V50N18	Desired Automaneuver to FDAI Ball Angles	R XXX.XX deg P XXX.XX deg Y XXX.XX deg

Automaneuver: Guidance Control — PGNS
Mode Control — PGNS Auto

P41 (continued)

PRO

V16N18	Desired Automaneuver to FDAI 8ail Angles	R XXX.XX deg P XXX.XX deg Y XXX.XX deg

Monitor automatic maneuver to V06N18 displayed values.

Manual Maneuver: Guidance Control – PGNS
Mode Control – PGNS Attitude Hold

Maneuver to V50N18 values.

ENTER

V16N85	VG_X (body) VG_Y (body) VG_Z (body)	XXXX.X ft/s XXXX.X ft/s XXXX.X ft/s

Mode Control: Attitude Hold

At TIG - 35 seconds, the DSKY blanks until TIG - 30 seconds and V16N85 display returns.

At TIG - 00 seconds.

Flashing V16N85	VG_X (body) VG_Y (body) VG_Z (body)	XXXX.X ft/s XXXX.X ft/s XXXX.X ft/s

Null components of velocity, when satisfied.

PRO

Flashing V37	Select New Program.

P42—APS PROGRAM

Purpose:

1. To compute a preferred IMU orientation and vehicle attitude for an LM APS thrusting maneuver and maneuver the vehicle to that attitude.

2. To control the S/C during countdown, ignition, thrusting, and thrust termination of a PGNS-controlled APS maneuver.

Assumptions:

1. The target parameters have been calculated and stored in the LGC by prior execution of a prethrusting maneuver.

2. The required steering equations are identified by the prior prethrust program, which either reset ("ASTEER") or set (External Delta V) the External Delta V flag. For External Delta V steering, VG is calculated once for the specified time of ignition. Thereafter both during APS thrusting and until the crew notifies the LGC that RCS trim thrusting has been completed, the LGC updates VG only as a result of accelerometer inputs.

   For steering control when using "ASTEER," the velocity required is calculated from the most recent intercept trajectory semimajor axis. The Lambert routine periodically recomputes the intercept trajectory semimajor axis for the "ASTEER" calculations. The interval between Lambert solutions is controlled by an erasable load value (UT).

3. Engine ignition may be slipped beyond the established TIG if desired by the crew or if state vector integration cannot be completed in time.

4. If a thrusting maneuver is performed with the Guidance Control switch in PGNS and the Mode Control switch in Auto, the PGNS controls the total vehicle attitude and generates either Mode 1 or Mode 2 attitude errors for display on the FDAI. The crew may exercise control about only the yaw axis with the ACA (X-axis override) provided the X-axis override capability is permitted.

P42 (continued)

If a thrusting maneuver is performed with the Guidance Control switch in PGNS and the Mode Control switch in Attitude Hold, the PGNS holds the vehicle attitude and generates either Mode 1 or Mode 2 attitude errors for display on the FDAI. The crew may exercise manual control about all vehicle axes with the ACA using either the Rate Command or Minimum Impulse mode. However, it is strongly recommended that powered flight not be attempted in the Minimum Impulse mode.

5. The PGNS generates two types of errors for display on the FDAI as selected by the astronaut:

   a. Mode 1 — Selected by Verb 61. Autopilot following errors used as a monitor of the DAP's ability to track automatic steering commands.

   b. Mode 2 — Selected by Verb 62. Total attitude errors used to assist the crew in manually maneuvering the vehicle.

6. The X-axis override option provides the crew with the ability to exercise manual control about the LM X axis with the attitude controller even though the PGNS Attitude Control mode is Auto. When the controller is returned to detent the PGNS damps the yaw rate, stores the yaw attitude when the yaw rate is damped, and then maintains that attitude.

   The X-axis override option is always available to the crew. However, it should not be exercised when the LGC is specifying a desired yaw attitude; that is, during the attitude maneuver to the thrusting attitude.

7. The Load DAP Data routine (R03) may have been performed prior to selection of this program.

8. The LGC will neither designate nor read the Rendezvous Radar (RR) during the program.

9. This program should be selected by the astronaut by DSKY entry at least 5 minutes before the estimated time of ignition.

10. The value of Delta V required will be stored in the local vertical system and is available in this program until Average G turns on by keying V06N81E.

Sequence of Events:

V37E42E

Flashing V50N18	Desired Automaneuver to FDAI Ball Angles	R XXX.XX deg P XXX.XX deg Y XXX.XX deg

Automaneuver: Guidance Control — PGNS
Mode Control — PGNS Auto

PRO

V06N18	Desired Automaneuver to FDAI Ball Angles	R XXX.XX deg P XXX.XX deg Y XXX.XX deg

Monitor automaneuver to V06N18 displayed values.

Manual Maneuver: Guidance Control — PGNS
Mode Control — PGNS Attitude Hold

Maneuver to V50N18 displayed angles.

ENTER

V06N40	Time from Ignition Velocity to be Gained ΔV (accumulated)	XXbXX min/s XXXX.X ft/s XXXX.X ft/s

TFI counts down until TIG - 35 seconds when DSKY blanks for 5 seconds. V06N40 display returns until TIG - 5 seconds.

P42 (continued)

V06N40 Same as above.

TIG - 15 seconds. R3 should be less than 00005.
TIG - 14 seconds. Manual ullage.
TIG - 10 seconds. Stage switch — Fire MASTER ARM — OFF.
TIG - 3.5 seconds. Verify +X ullage
TIG - 5 seconds.

Flashing V99N40	Time from Ignition	XXbXX min/s
	Magnitude of Velocity to be Gained	XXXX.X ft/s
	ΔV (accumulated)	XXXX.X ft/s

PRO

V06N40	Time from Engine Cutoff	XXbXX min/s
	Magnitude of Velocity to be Gained	XXXX.X ft/s
	ΔV (accumulated)	XXXX.X ft/s
Flashing V16N40	Time from Engine Cutoff	XXbXX min/s
	Magnitude of Velocity to be Gained	XXXX.X ft/s
	ΔV (accumulated)	XXXX.X ft/s

Engine Arm — OFF. Shutdown APS engine.

PRO

Flashing V16N85	ΔV_X (LM body)	XXXX.X ft/s
	ΔV_Y (LM body)	XXXX.X ft/s
	ΔV_Z (LM body)	XXXX.X ft/s

Null residual velocities.

PRO

Flashing V37 Select New Program

P47—THRUST MONITOR PROGRAM

Purpose:

1. To monitor vehicle acceleration during a non-PGNS controlled thrusting maneuver and display Delta V applied to the vehicle by this thrusting maneuver.

Assumptions:

1. This program is normally used during the final phase of the rendezvous. If the crew desires to do any final phase thrusting maneuvers automatically under PGNS control they must be accomplished via selection of the Transfer Phase Initiation (TPI) program (P34) and then the DPS Thrusting program (P40).
2. Range, range rate, and theta may be displayed during this program by calling the Rendezvous Parameter Display routine (R31).
3. This program should be turned on just prior to the planned thrusting maneuver and terminated as soon as possible after the maneuver in order to keep errors associated with Average G integration at a minimum.
4. The Orbit Parameter Display routine (R30) may be called during this program by keying in V82E.

P47 (continued)

Sequence of Events:

V37E47E			
	Flashing V16N83	ΔV_X (LM body) ΔV_Y (LM body) ΔV_Z (LM body)	XXXX.X ft/s XXXX.X ft/s XXXX.X ft/s
V83E			
	V16N54	Range Range Rate Angle Between LM +Z Axis and Horizontal	XXX.XX nmi XXXX.X ft/s XXX.XX deg
PRO			
	Flashing V16N83	Same as above.	
V82E			
	Flashing V16N44	Apocenter Altitude Pericenter Altitude Time from Phase	XXXX.X nmi XXXX.X nmi XXbXX min/s
PRO			
	Flashing V16N83	Same as above.	
PRO			
	Flashing V37	Select New Program.	

P51–IMU ORIENTATION DETERMINATION PROGRAM

Purpose:

1. To determine the inertial orientation of the IMU using sightings on two celestial bodies with the AOT or a backup optical system.

Assumptions:

1. There are no restraints upon the LM attitude control modes until a PGNS controlled maneuver is called by a program or the crew wishes to manually maneuver the vehicle.
2. Time and RCS fuel may be saved, and subsequent IMU alignment decisions greatly simplified, if this program is performed in such a way as to leave the IMU inertially stabilized at an orientation as close as possible to the optimum orientation sequence followed by future LGC programs.
3. Extended verbs should not be exercised during this program because of possible interference with the AOT Mark routine (R53).

P51 (continued)

Sequence of Events:

V37E51E

Flashing — Checklist Code 00015
V50N25

Perform celestial body acquisition.

To coarse align IMU to 0 - 0 - 0

ENTER

V41N22 + 000.00 deg
+ 000.00 deg
+ 000.00 deg

NO ATT light on; FDAI ball torques; NO ATT light off

PRO

Flashing Code 00CDE
V01N71 Mark X/Cursor Counter XXXXX Octal
Mark Y/Spiral Counter XXXXX Octal

C – AOT Detent
0–COAS calibration (not allowed), 1–front left, 2–front center, 3–front right, 4–right rear, 5–rear center, 6–rear left, 7–backup optical system–COAS.
DE–Celestial Body Code
00–planet, 01/45–star from code list, 46–sun, 47–earth, 50–moon

V21E. Load desired star code and detent.
If C = 7, COAS to be used in place of AOT for marks.

PRO

Flashing Backup Optics LOS Azimuth XXX.XX deg
V06N87 Backup Optics LOS Elevation XXX.XX deg

V24E. Load correct data +E, +09000E Overhead Window.

PRO

Flashing (Mark X or Y)
V54N71 Display same as V01N71 above.

MARK X

V53N71 (Mark Y Reticle)
Display same as V01N71 above.

MARK Y

V52N71 (Mark X Reticle)
Display same as V01N71 above.

After first star, repeat sequence starting at V01N71.

PRO

After second star.

Flashing Star Angle Difference XXX.XX deg
V06N05

V32E

Recycle to start of program with Flashing V50N25 display.

or
PRO

Flashing Select New Program
V37

P52—IMU REALIGN PROGRAM

Purpose:

1. To align the IMU from a "known" orientation to one of four orientations selected by the astronaut using sightings on two celestial bodies with the AOT or a backup optical system.

   a. Preferred Orientation (Option 00001). An optimum orientation for a previously calculated maneuver. This orientation must be calculated and stored by a previously selected program.

   b. Landing Site Orientation (Option 00004)

   X_{SM} = Unit (R_{LS}) Y_{SM} = Unit ($Z_{SM} \times X_{SM}$) Z_{SM} = Unit ($H_{CSM} \times X_{SM}$)

   where:

   The origin is the center of the moon. R_{LS} = The position vector of the LM on the lunar surface at a landing site and a time T(align) selected by the crew.

   H_{CSM} = The angular momentum vector of the CSM ($R_{CSM} \times V_{CSM}$).

   A special case of the landing site orientation occurs when T(align) is defined as the time of lunar landing T(land). This case occurs only if T(land) has been defined by the MSFN, transmitted to the crew, and the crew has then defined T(Align) to be T(land) in this program.

   c. Nominal Orientation (Option 00002)

   X_{SM} = Unit (R) Y_{SM} = Unit (V x R) Z_{SM} = Unit ($X_{SM} \times Y_{SM}$)

   where:

   R = The geocentric (earth orbit) or selenocentric (lunar orbit) radius vector at time T(align) selected by the astronaut.

   V = The inertial velocity vector at time T(align) selected by the astronaut.

   d. REFSMMAT (Option 00003). A known orientation stored in the LGC at a previous time.

Assumptions:

1. The configuration may be docked (LM/CSM) or undocked (LM alone). The present configuration should have been entered into the LGC by completion of the DAP Data Load routine (R03).
2. There are no restraints upon the LM attitude control modes until a PGNS controlled maneuver is called by a program or the crew wishes to manually maneuver the vehicle. The Guidance Control switch may be at PGNS or AGS and, if at PGNS, the mode may be Auto or Attitude Hold. Prior to PGNS controlled maneuvers the LGC will request the correct mode if it is not in effect. For manually controlled maneuvers the crew must select the correct modes.
3. This program makes no provision for an attitude maneuver to return the vehicle to a specified attitude. Such a maneuver, if desired, must be done manually. An option is provided however to allow pointing of the AOT at astronaut or LGC selected stars either manually by the crew or automatically by an LGC controlled attitude maneuver.
4. An option is provided to realign the IMU to the preferred, nominal, or landing site orientation without making celestial body sightings.
5. Extended verbs should not be exercised during this program because of possible interference with the AOT Mark routine (R53).

Sequence of Events:

V37E52E

Flashing V04N06	Option Code ID	00001 IMU Alignment Option 0000X

(1—Preferred, 2—nominal, 3—REFSMMAT, 4—landing site)

V22E. Reload desired option.

P52 (continued)

Landing Site option.

PRO

Flashing V06N34	Time of Landing	00XXX. h 000XX. min 0XX.XX s

V25E. Reload desired landing time.

PRO

Flashing V06N89	Designated Landing Site Latitude Designated Landing Site Longitude/2 Designated Landing Site Altitude	XX.XXX deg (+ north) XX.XXX deg (+ east) XXX.XX nmi

V25E. Load corrected landing site coordinates.

PRO Go to Preferred option.

Nominal option

Flashing V06N34	Time of Alignment	00XXX. h 000XX. min 0XX.XX s

V25E. Load desired T_{ALIGN}

PRO Go to Preferred option.

Preferred, Nominal, or Landing Site options continue from this display.

PRO

Flashing V06N22	IMU Gimbal Angles at Desired Orientation	OGA IGA MGA	XXX.XX deg XXX.XX deg XXX.XX deg

To maneuver away from gimbal lock, maneuver with hand controller.

V32E

Flashing V06N22	IMU Gimbal Angles at Desired Orientation	OGA IGA MGA	XXX.XX deg XXX.XX deg XXX.XX deg

PRO

Flashing V50N25	Checklist Code	00013

Gyro Torque Only

Mode Control: PGNS – Attitude Hold, V76E – minimum impulse, No DAP light on.

ENTER

V16N20	Present ICDU Angles	OGA IGA MGA	XXX.XX deg XXX.XX deg XXX.XX deg

when torquing complete

Flashing V50N25	Checklist Code	00014

ENTER

No fine alignment desired.

Flashing V37	Select New Program	

Normal alignment and realignment

PRO No Attitude light-on – then off

Flashing V50N25	Checklist Code	00015

Select star acquisition mode.

P52 (continued)

PRO or V32E for
Cursory Spiral
Marking

Flashing V01N70 Code 00CDE

C–AOT Detent
0–COAS calibration (not allowed), 1–front left, 2–front center, 3–front right, 4–right rear, 5–rear center, 6–rear left, 7–backup optical system–COAS
DE–Celestial Body Code
00–Planet, 01/45–star from code list, 46–sun, 47–earth, 50–moon.

V21E. Load desired star code and detent.

PRO If C=7, COAS to be used.

Flashing V06N78	Backup Optics LOS Azimuth	XXX.XX deg
	Backup Optics LOS Elevation	XXX.XX deg

V24E. Load correct data.

+E, +E for forward window
+E, +9000E, overhead window

If DE = 00

Flashing V06N88	Components of Celestial Body Unit Vector	.XXXXX .XXXXX .XXXXX

V25E. Load desired vector components.

If Cursor and
Spiral Option

Flashing V06N79	Cursor Angle	XXX.XX deg
	Spiral Angle	XXX.XX deg
	Detent Code	+0000X

V32E
Recycle to Flashing V01N70 display above.
or
PRO

Flashing V01N71 Code 00CDE

C–AOT Detent
0–COAS calibration (not allowed), 1–front left, 2–front center, 3–front right, 4–right rear, 5–rear center, 6–rear left, 7–backup optical system–COAS
DE–Celestial body code
00–Planet, 01/45 star from code list, 46–sun, 47–earth, 50–moon.

If DE = 00

Flashing V06N88	Components of Celestial Body Unit Vector	.XXXXX .XXXXX .XXXXX
Flashing V52N71	Code	00CDE
	Mark X/Cursor Counter	XXXXX
	Mark Y/Spiral Counter	XXXXX

Position cursor, Mark X, or ROD switch pushed.

PRO

Flashing V21N79	Cursor Angle	XXX.XX deg
	Spiral Angle	XXX.XX deg
	Detent Code	+0000X

(Definition of detent code, same as above in C position of N71 display)

Enter current value of cursor angle or V22; enter current value of spiral angle.

Flashing
V06N79

Cursor Angle	XXX.XX deg
Spiral Angle	XXX.XX deg
Detent Code	+0000X

PRO

Flashing
V53N71

Code	00CDE
Mark X/Cursor Counter	XXXXX
Mark Y/Spiral Counter	XXXXX

Position spiral, Mark X or Mark Y, or ROD switch pushed.

PRO

Flashing
V22N79

Cursor Angle	XXX.XX deg
Spiral Angle	XXX.XX deg
Detent Code	+0000X

Enter current value of spiral angle or V21; enter current value of cursor angle.

PRO

Program recycles to Flashing V52N71 or V53N71 display as above. ENTER will alternate V52N71 or V53N71 displays at this point.

After second star marking is finished

PRO

Flashing
V06N05 Display defined below.

PRO

Flashing
V50N18 Desired Automaneuver to FDAI Ball Angles

R	XXX.XX deg
P	XXX.XX deg
Y	XXX.XX deg

Manual Maneuver

Mode Control: PGNS — Attitude Hold. Do manual maneuver.

PRO

Flashing
V50N18 Desired Automaneuver to FDAI Ball Angles

R	XXX.XX deg
P	XXX.XX deg
Y	XXX.XX deg

ENTER

After maneuver complete

Flashing
V54N71 Mark X or Y or ROD
Display same as V01N71 above.

MARK X

V53N71 Mark Y or ROD. Display same as V01N71 above.

MARK Y

V52N71 Mark X or ROD. Display same as V01N71 above.

PRO Display same as V01N71 above.

After second star

Flashing
V06N05 Star Angle Difference XXX.XX deg

V23E

Recycle to start of program with flashing V50N25 display. (RE FSMMAT option)

or
PRO

Flashing
V06N93 Gyro Torque Angle

X	XX.XXX deg
Y	XX.XXX deg
Z	XX.XXX deg

PRO

Flashing
V37 Select New Program.

V32E

Recycle to part of program with flashing V50N25 display. (REFSMMAT option)

P57--LUNAR SURFACE ALIGN PROGRAM

Purpose:

1. While on the surface of the moon to align or realign the IMU to one of three types of orientations:

   a. Landing Site Orientation (Option 4)

   $$X_{SM} = \text{Unit}(R_{LS}) \quad Y_{SM} = \text{Unit}(Z_{SM} \times X_{SM}) \quad Z_{SM} = \text{Unit}(H_{CSM} \times X_{SM})$$

   where:

   The origin is the center of the moon.

   R_{LS} = The position vector of the LM on the lunar surface at the most recently designated landing site and a time T(align) selected by the crew.

   H_{CSM} = The angular momentum vector of the CSM ($R_{CSM} \times V_{CSM}$).

   b. Preferred Orientation (Option 1)

   An IMU orientation specified by the ground and loaded into the LGC by the LGC Update program (P27). When such an orientation is loaded by the ground the preferred orientation flag will be also set during P27.

   c. REFSMMAT (Option 3).

Assumptions:

1. There are several methods available to the crew for completing an IMU alignment. The resultant accuracy of the IMU to the specified desired orientation (that is, that orientation defined by the final REFSMMAT) is dependent upon the mode of alignment which the crew selects. This selection will be dictated by the circumstances at the time of alignment.
2. The LM has landed on the lunar surface. The LM yaw angle with respect to the inertial orientation of the IMU at landing was not constrained during landing.
3. All possible efforts have been made by the crew to assure that the LM will not shift its position with respect to the lunar surface. No provision has been made to incorporate in the LGC any measurement of LM settling on the lunar surface. However, a shifting of the LM will result in a misaligned IMU only in the case where an alignment is made from a stored LM attitude with respect to the lunar surface (Technique Codes 00000 and 00001) and the IMU is not subsequently aligned by reference to celestial bodies and/or lunar gravity.
4. The ISS is on and may be:
   a. At an inertial orientation "unknown" to the LGC; that is, having been shut down and restarted since landing without subsequent orientation determination.
   b. At an inertial orientation "known" by the LGC; that is, neither gimbal lock nor IMU power interruption has occurred since the last IMU alignment or orientation determination. Therefore the present orientation differs from that stored in REFSMMAT only due to gyro drift and/or the initial misalignment of the IMU to the stored REFSMMAT.
5. Extended verbs should not be exercised during the Lunar Surface Sighting Mark routine (R59) because of possible interference with the AOT Mark routine (R53).
6. The LM attitude with respect to the lunar surface is available in LGC storage; that is, it will have been stored by the Landing Confirmation program (P68). Once this attitude has been stored it will be preserved by the LGC until it is replaced by a more recent value.
7. This program is selected by the astronaut by DSKY entry. It will normally be selected to perform an alignment of the IMU immediately after landing on the lunar surface, prior to selection of the RR Lunar Surface Navigation program (P22), prior to AGS initialization, and approximately 15 minutes prior to ascent. This program may also be used to provide an IMU alignment in time-critical emergencies prior to ascent.

P57 (continued)

8. The DAP should be off during gyro torquing by this program to preclude RCS jet firings due to realignment of the IMU causing attitude errors exceeding the maximum deadband.

9. A determination of the LM position vector while on the lunar surface (R_{LS}) can be accomplished only in conjunction with IMU alignment Technique 2 (using AOT sightings on two celestial bodies). It is valid only if the lunar gravity vector has been previously defined during P57, using IMU alignment Technique 1 (using REFSMMAT or stored LM attitude and determination of lunar gravity vector) or Technique 3 (using single celestial body sighting and determination of lunar gravity vector).

Sequence of Events:

V37E57E

Flashing V04N06	Option Code ID	00001 Specify Alignment mode
	Option Code	0000X

1—preferred, 2—nominal (not valid)
3—REFSMMAT, 4—landing site

V22E. Load desired option.
Landing Site Only

PRO

Flashing V06N34	Time of Alignment	00XXX. h 000XX. min 0XX.XX s

V25E. Load desired alignment time.

Preferred and REFSMMAT

Flashing V05N06	Specify Alignment Technique	00010
	Alignment Technique	0000X

0—prestored attitude, 1—prestored attitude +g
2—two celestial bodies, 3—one celestial body + g

	DataCode	00CD0

C=1 — REFSMMAT defined
C=0 — REFSMMAT not defined
D=1 — Stored LM attitude available
D=0 — Stored LM attitude not available

For alignment technique REFSMMAT +g or one celestial body +g.

PRO

V16N20	Present ICDU Angle	OGA +042.00 deg IGA +318.00 deg MGA +035.25 deg

No Attitude and No DAP light on, then off twice.

Flashing V06N04	Angle Between Present and Stored Gravity Vector	XXX.XX deg

For Alignment technqiue stored or REFSMMAT Attitude or two celestial bodies and IMU not aligned.

Flashing V06N22	Desired ICDU Angles	OGA XXX.XX deg IGA XXX.XX deg MGA XXX.XX deg

P57 (continued)

PRO No Attitude light off

For alignment techniques
Two celestial bodies or one celestial body +g and IMU aligned.

Flashing	Code	00CDE
V01N70		

C—AOT Detent
0—COAS calibration (not allowed), 1—front left, 2—front center, 3—front right, 4—right rear, 5—rear center, 6—rear left, 7—backup optical system — COAS

DE—Celestial Body Code
00—planet, 01/45—star from star code list, 46—sun, 47—earth, 50—moon.

V21E. Load desired star code and detent.

For DE = 00

Flashing	Components of Celestial Body Unit	X	.XXXXX
V06N88	Vector	Y	.XXXXX
		Z	.XXXXX

PRO

Flashing	Cursor Angle	XXX.XX deg
V06N79	Spiral Angle	XXX.XX deg
	Position Code	0000X

V32E
To redefine star

Flashing	(Same as above V01N70.)	00CDE
V01N70		

PRO

Flashing	Code	00CDE
V01N71	Mark X/Cursor Counter	XXXXX
	Mark Y/Spiral Counter	XXXXX

PRO

Flashing		
V52N71	Code	00CDE
or	Mark X/Cursor Counter	XXXXX
V53N71	Mark Y/Spiral Counter	XXXXX

To change V52N71 to V53N71 or vice versa, key ENTER.
For V52, position cursor and punch Mark X, Mark Y or click ROD switch.
For V53, position spiral and punch Mark X, Mark Y or click ROD switch.
For crew specified bodies, PRO repeats Flashing V01N71 display.
For LGC calculated angles, recycle (V32E).

Flashing		
V06N79	Cursor Angle	XXX.XX deg
	Spiral Angle	XXX.XX deg
	Position Code	0000X

P57 (continued)

PRO If alignment technique is two celestial bodies, repeat sequence starting with Flashing V01N70 display and then continue. If alignment technique is one celestial body and gravity continue.

Flashing V06N05	Star Angle Difference	XXX.XX deg

PRO

Flashing V06N93	X Gyro Torquing Angle	XX.XXX deg
	Y Gyro Torquing Angle	XX.XXX deg
	Z Gyro Torquing Angle	XX.XXX deg

PRO

Flashing V50N25	Checklist Code	00014 00014—choose fine align or landing site determination

PRO Recycles program to Flashing V01N70

ENTER

Flashing V06N89	Latitude	XX.XXX deg
	Longitude/2	XX.XXX deg
	Altitude	XXX.XX nmi

PRO

Flashing V37	Select New Program	

P63—BRAKING PHASE PROGRAM

Purpose:

1. To calculate the required time of DPS ignition (TIG) and other initial conditions required by the LGC for a PGNS-controlled, DPS-executed, braking phase of the powered landing maneuver.
2. To provide option to fine align the IMU to an existing REFSMMAT.
3. To align the LM to the thrusting ignition attitude.
4. To control the PGNS during countdown, ignition, and thrusting of the powered landing maneuver until HI gate.
5. To indicate to the crew that HI gate has been reached by automatic selection of the Approach Phase program (P64).

Assumptions:

1. The LM is on a descent coast orbit (Hohmann transfer) approaching the braking ignition point which is nominally 50,000 feet above the lunar radius at the designated landing site. The descent coast orbit is approximately coplanar with the CSM orbital plane. If the designated landing site is not in the descent coast plane at the nominal time of landing the plane change will be accomplished by the powered landing maneuver (Braking program, P63, and Approach program, P64).
2. The CSM is in a near-circular orbit around the moon at a nominal altitude of 60 nautical miles. The CSM is maintaining a preferred tracking attitude for optical tracking of the LM.
3. The IMU is on and aligned to a landing site orientation defined for the designated landing site and the nominal time of landing (T(land)), but should be fine aligned to this orientation as closely as possible prior to DPS ignition. The LM has not yet been aligned to the correct attitude for ignition for the powered landing maneuver.

4. The Landing Radar (LR) was energized, checked out, and made ready at LR Position No. 1 prior to selection of this program. Radar data will not be incorporated into the LM state vector until the astronaut sets the LR permit flag via V57E indicating he is satisfied with the quality of the data. V58E will reset the LR permit flag.

5. The Landing Analog Displays routine (R10) is enabled at DPS ignition and is terminated upon termination of Average G. The Powered Flight Designate routine (R29) is not enabled during the lunar descent.

6. The entire powered landing maneuver (braking,. approach, and landing) will be accomplished using the DPS engine.

7. The aim conditions for braking phase are stored in the LGC.

8. The following parameters required by this program have been stored by the LGC since LGC initialization by erasable load.

   a. The LM and CSM state vectors. The LGC has updated these as required. No further state vector updates from any external source other than the LR will be accepted by this program.

   b. The nominal landing time at the designated landing site T(land) and the position R_{LS}. Corrections to the landing site position R_{LS} may be made by keying V21 through V25 N69 and entering the appropriate correction.

9. The DPS is not throttlable over the whole range (0 to maximum). It must be operated either at maximum throttle or over a specific throttle range of lower settings. These throttle settings are total throttle settings; that is, the sum of the manual setting (whose minimum is about 10 percent) and the PGNS commanded setting.

   This program assumes the Throttle Control switch to be in Auto (the DPS receives the sum of the manual and PGNS commanded settings) and the manual throttle to be set at minimum for ZOOMTIME seconds of thrusting, and thereafter at a level less than that required by the LGC. The value ZOOMTIME is in erasable storage, having been loaded prior to launch or by P27.

   Due to the region of forbidden throttling, thrust command logic in conjunction with the interim terminal conditions assures that the commanded throttle remains at maximum until the guidance equations first require it to be within the allowable throttle range. Thereafter it should remain within the allowable throttle range.

   Furthermore, the DPS must be started in the following sequence: (1) +X axis 2-jet ullage for 7.5 seconds, (2) ignition at minimum throttle, (3) ullage off 0.5 seconds after ignition, (4) ZOOMTIME seconds at minimum thrust, and (5) maximum throttle. The throttle setting then becomes controlled by the guidance equations.

10. During the powered landing maneuver, the LGC will monitor the presence or absence of the Auto Stabilization discrete. This discrete is issued to the LGC when the Mode Control switch is in the Auto position.

    The LGC will also monitor the presence or absence of the Auto Throttle discrete. This discrete is issued to the LGC when the Thrust Control switch is in the Auto position.

    Should either of these discretes be interrupted during the powered landing maneuver, the LGC assumes that it no longer has complete automatic control of the maneuver.

    The monitor and the associated LGC logic is included in the Landing Auto Modes Monitor routine (R13) which will be called by this program.

    The LGC can be forced to ignore the absence of the Auto Throttle discrete and continue issuing normal throttle commands by setting the CHANBACKUP location (0374) in the computer to 0001 Xg. This location can only be set by astronaut or

P63 (continued)

11. The X-axis override option provides the crew with the ability to exercise manual control about the LM X axis with the attitude controller even though the PGNS Mode Control switch is in Auto. When the controller is returned to detent the PGNS damps the yaw rate, stores the yaw attitude when the yaw is damped, and then maintains that attitude.

The X-axis override option is available to the crew (until the estimated altitude is below 30,000 feet); however, it should not be exercised when the LGC is specifying a desired yaw attitude; that is, during the attitude maneuver to the thrusting attitude. The option is inhibited by this program from midway in the program to the end.

12. The LGC specifies LM attitude during the powered landing maneuver based upon the requirements of thrust vector control, landing site visibility, and LR orientation. After DPS ignition, thrust vector control is required through the remainder of this program. The landing site becomes visible at the beginning of the approach phase.

Thrust vector control does not constrain the LM orientation about the thrust axis (yaw attitude). Rotation about the LM Y and LM Z axes is used to point the measured thrust vector along the desired thrust vector.

The first restraint upon the LM yaw attitude to occur is that of LR orientation. The LGC will not attempt to use LR data until the LGC estimation of altitude is 50,000 feet. Automatic X-axis override lockout and yaw attitude specification by the LGC will not occur until the LGC estimated altitude is 30,000 feet. Before this time, the astronaut must maneuver to a roughly-window-up yaw orientation to prevent subsequent loss of S-band lock-on. The LGC will then command the vehicle to the LGC-specified yaw attitude.

Subsequent to X-axis override lockout, control of the vehicle about the LM X axis is governed by LR orientation requirements during this program. The landing site becomes visible to the command pilot if the "look" angle (the angle between the LM -X axis and the LOS to the landing site) is greater than 25 degrees and the LOS is in or near the LM X/Z plane.

At any time during P63 or P64, the magnitude of the look angle and the orientation of the look angle plane (that plane containing the LOS and the LM X axis) are defined by the inertial orientation of the LM X axis and the position of the LM with respect to the landing site.

13. The crew has the capability to display LGC calculated values of forward velocity, lateral velocity, altitude, and altitude rate on certain LM meters during this program. The calculations of these parameters is under the control of the Landing Analog Displays routine.

14. The crew can select a display of the LGC computed throttle setting by keying V16 N92.

P63 (continued)

15. The Rate of Descent (ROD) mode is not enabled during this program.

16. An abort from the lunar descent may be required at any time during the descent orbit injection, the descent coast, or the powered descent (P63), (P64), or (P66).

For aborts after DPS ignition for the powered landing maneuver, time is critical. During this period an abort is nominally commanded by pushing one of two buttons in the LM. The abort may be commanded to use the descent stage (Abort button) or the ascent stage (Abort Stage button). If the descent stage is selected, and the DPS propellant approaches exhaustion, control must be switched to the ascent stage by the crew by ascent stage selection (Abort Stage button).

During the powered landing maneuver, the LGC will continuously monitor the Abort and Abort Stage discretes, and upon receipt of either will terminate the program in process and call the appropriate abort program (DPS Abort program (P70) or APS Abort program (P71)). Both abort programs will guide the LM to an acceptable orbit.

The monitor of the Abort and Abort Stage buttons is controlled by the Abort Discretes Monitor routine (R11) which will be enabled by this program.

This step can be locked out by setting the CHANBACKUP location (0374) in the computer to 000X1$_8$. This location can only be set by astronaut or ground loading and is not changed by Fresh Start or Restart.

17. If a thrusting maneuver is performed with the Guidance Control switch in PGNS and the Mode Control switch in Auto, the PGNS controls the total vehicle attitude and generates either Mode 1 or Mode 2 attitude errors for display on the FDAI. The crew may exercise control about only the yaw axis with the ACA (X-axis override) provided the X-axis override capability is permitted.

If a thrusting maneuver is performed with the Guidance Control switch in PGNS and the Mode Control switch in Attitude Hold, the PGNS holds the vehicle attitude and generates either Mode 1 or Mode 2 attitude errors for display on the FDAI. The crew may exercise manual control about all vehicle axes with the ACA using either the Rate Command or Minimum Impulse mode. However, it is strongly recommended that powered flight not be attempted in the Minimum Impulse mode.

During a thrusting maneuver in the PGNS/Attitude Hold mode the astronaut is responsible for maintaining small enough attitude errors to achieve guidance objectives.

18. Control of LM DPS, RCS, and APS is transferred from PGNS to the Abort Guidance System (AGS) by changing the Guidance Control switch from PGNS to AGS.

The AGS will be capable of taking over control of the LM during any portion of the lunar descent or ascent or during either of the abort programs (P70 or P71). The AGS will guide the LM to a safe orbit.

The AGS may be initialized by the LGC at any time by manual selection of the AGS Initialization routine (R47). However, it is not recommended that the AGS be initialized during powered flight because DAP attitude control is interrupted during the CDU zero part of the routine.

In the event that the Guidance Control switch is changed from PGNS to AGS during a thrusting maneuver, the LGC will continue computation of position and velocity, the desired thrust vector, and the desired attitude errors.

19. The PGNS generates two types of errors for display on the FDAI as selected by the astronaut.

a. Mode 1—Selected by Verb 61. Autopilot following errors used as a monitor of the DAP's ability to track automatic steering commands.

b. Mode 2 — Selected by Verb 62. Total attitude errors used to assist the crew in manually maneuvering the vehicle.

P63 (continued)

20. The event timer was set prior to selection of this program to count to zero at T BRAK based on a time from ignition provided by the ground.

21. The Load DAP Data routine (R03) has been performed prior to selection of this program. At that time the DPS engine gimbal should have been driven to the correct trim position.

22. During DPS burn only, the pitch-roll RCS jet autopilot (U and V jets) may be disabled (V65E) or enabled (V75) by Extended Verb as shown. This capability is intended to be used to prevent LM and descent stage thermal constraint violations during CSM-docked DPS burns (P40). The capability exists during P70 also. Performance of FRESH START (V36E) will always enable the pitch-roll jets.

23. This program is selected by the astronaut by DSKY entry. It should be selected at least 20 minutes before the nominal time of ignition for the powered landing maneuver (T BRAK).

24. Engine ignition may be slipped beyond the established TIG if desired by the crew or if state vector integration cannot be completed in time.

25. Two alarm conditions may be originated by the PGNS powered landing equations:

    a. If subroutine ROOTSPRS in the RG/VG calculation fails to converge in 8 passes the LGC will turn on the Program Alarm light, store Alarm Code 1406, and go immediately to the final Automatic Request routine (R00). This alarm can occur only in P63 or P64.

    b. If an overflow occurs anywhere in the landing equations the LGC will turn on the Program Alarm light, store Alarm Code 1410, stop all vehicle attitude rates, and continue. This alarm can occur only in P63, P64, or P66.

26. This program allows manual control of LM attitude and the selection of P66.

    During P63 (P64) the astronaut can display the PGNS total guidance error on the FDAI error needles (Attitude Monitor switch in PGNS) by having keyed in V62E through the DSKY. He can then steer out the PGNS P63 attitude errors with the PGNS manually (Guidance Control switch in PGNS and the PGNS Mode Control switch in Attitude Hold); or automatically (PGNS Mode Control switch in Auto); or with the AGS manually (Guidance Control switch in AGS and the AGS Mode Control switch in Attitude Hold).

    NOTE: If the astronaut hits the ROD (Rate of Descent) switch while the PGNS Mode Control switch is in Attitude Hold, the LGC will irrevocably transfer him out of the automatic guidance program modes (P63 and P64) into the ROD program (P66).

Sequence of Events:

V37E63E

Flashing	Time to Go in Braking Phase	XXbXX min/s
V06N61	Time from Ignition	XXbXX min/s
	Crossrange Distance	XXXX.X nmi
		(+ Landing Site north of S/C)

N33E

Flashing	Time of Ignition	00XXX. h
V06N33		000XX. min
		0XX.XX s

KEY REL

PRO

Flashing V50N18	Desired Automaneuver FDAI Ball Angles	R XXX.XX deg P XXX.XX deg Y XXX.XX deg

Automaneuver: Guidance Control – PGNS
Mode Control – PGNS, Auto

PRO

V06N18	Desired Automaneuver to FDAI Ball Angles	R XXX.XX deg P XXX.XX deg Y XXX.XX deg

Monitor maneuver to previous angles displayed.

Flashing V50N18	Desired Automaneuver to FDAI Ball Angles	R XXX.XX deg P XXX.XX deg Y XXX.XX deg

ENTER

V06N62	Absolute Value of Velocity	XXXX.X ft/s
	Time from Ignition	XXbXX min/s
	Delta V accumulated	XXXX.X ft/s

Time from ignition keeps counting down until TIG - 35 seconds. DSKY blanks for 5 seconds and V06N62 display returns at TIG -30 seconds.

V06N62	Absolute Value of Velocity	XXXX.X ft/s
	Time from Ignition	XXbXX min/s
	Delta V Accumulated	XXXX.X ft/s

TIG - 5 seconds.

Flashing V99N62	(Same as above display)

PRO Astronaut okays ignition.

Flashing V06N63	Delta Altitude	XXXX.X ft
	Altitude Rate	XXXX.X ft/s
	Computed Altitude	XXXXX. ft

At approximately 42,000 feet computed altitude, ALT and VEL lights – Off.

V57E At approximately 40,000 feet computed altitude.

V06N63	Delta Altitude	XXXXX. ft
	Altitude Rate	XXXX.X ft/s
	Computed Altitude	XXXXX. ft

At approximately ignition +9:30, P64 automatically entered and P64 displayed.

P64—APPROACH PHASE PROGRAM

Purpose:

1. To control the PGNS during the thrusting of the powered landing maneuver between HI gate and LO gate.
2. To control the DPS thrust and attitude between HI gate and LO gate.
3. To provide the crew with the capability of redesignating the landing site to which the PGNS is guiding the LM.

Assumptions:

1. The LM is on the powered landing descent between HI gate and LO gate.
2. The CSM is in a near circular orbit around the moon at a nominal altitude of 60 nautical miles. The CSM is maintaining a preferred tracking attitude for optical tracking of the LM.
3. The Landing Radar (LR) is on, checked out, and should have been providing to the LGC velocity and range information with respect to the moon. This information should have been incorporated into the LM state vector. The LGC/LR operation is under the control of the Descent State Vector Update routine (R12) which is already in process.
4. The entire powered landing maneuver (braking, approach, and landing) will be accomplished using the DPS engine.
5. The aim conditions (LO gate) for the approach phase are stored in the LGC.
6. The LM state vector has been stored in the LGC since initialization by ERASABLE register load. The LGC has updated this as required during thrusting. No further state vector updates from any source other than the LR will be accepted by this program.
7. The DPS is not throttlable over the whole range from 0 to maximum. It must be operated either at maximum throttle or over a specific throttle range of lower settings. These throttle settings are total throttle settings; that is, the sum of the manual setting (whose minimum is about 10 percent) and the PGNS commanded setting.

   This program assumes the Throttle Control switch to be in Auto (the DPS receives the sum of the manual and PGNS commanded settings) and the manual throttle to be set at a level less than that required by the LGC.

   Nominally, if the Approach Phase program is completed without any redesignation of the landing site (see Assumption 10), the throttle will remain within the allowable throttle range throughout the phase. Excessive target redesignations during this program, however, may result in required throttle excursions outside the allowable range. In such cases the LGC will command maximum throttle for at least 2 seconds, and until the required throttle setting returns to the permitted throttle region.
8. During the powered landing maneuver, the LGC will monitor the presence or absence of the Auto Stabilization discrete. This discrete is issued to the LGC when the Mode Control switch is in the Auto position.

   The LGC will also monitor the presence or absence of the Auto Throttle discrete. This discrete is issued to the LGC when the Thrust Control switch is in the Auto position.

   Should either of these discretes be interrupted during the powered landing maneuver, the LGC assumes that it no longer has complete automatic control of the maneuver.

   The monitor and the associated LGC logic is included in the Landing Auto Modes Monitor routine (R13) which is already in process.

   The LGC can be forced to ignore the absence of the Auto Throttle discrete and continue issuing normal throttle commands by setting the CHANBACKUP location (0374) in the computer to 0001Xg. This location can only be set by astronaut or ground loading and is not changed by Fresh Start or Restart.

9. The X-axis override option is not provided to the crew whenever the LGC estimated

P64 (continued)

10. During most of the approach phase, the LGC provides the crew with the option to redesignate the landing site to which the PGNS is guiding the LM. This option is called the Landing Point Designator (LPD) mode. The PGNS Mode Control switch must be in Auto for the ACA to function as a landing site redesignator.

    The landing point redesignation, if exercised, is based upon visual assessment of the lunar terrain with respect to the presently designated landing site. During the LPD mode the present landing site is displayed on the DSKY in terms of coordinates on the LPD sighting grid on the left hand LM window (LPD angle). Landing site redesignations are manually put into the computer via the attitude controller on an incremental basis; that is, a limit switch actuation in the attitude controller causes the LGC to redesignate the landing site at a fixed angular increment (1 degree in elevation, 1 degree in azimuth) from the present LM/landing site. The applicable attitude controller polarities are:

    a. -Pitch Rotation gives -LPD Elevation (new site beyond present site).

    b. +Pitch Rotation gives +LPD Elevation (new site short of present site).

    c. +Roll Rotation gives +LPD Azimuth (new site to right of present site).

    d. -Roll Rotation gives -LPD Azimuth (new site to left of present site).

11. The initial maneuver of the approach phase is the LM attitude transition from the LM attitude at the start of P64 to a satisfactory attitude for landing site visibility. After the completion of this maneuver the LM attitude is constrained by thrust pointing requirements and is controlled about the thrust axis so as to maintain the current landing site in the LM X-Z plane. The conditions achieved at the start of P64 should be such that the thrust pointing requirements of the approach phase will yield satisfactory visibility and radar orientations.

    The landing site becomes visible to the command pilot if the "look" angle (the angle between the -X LM axis and the LOS to the landing site) is greater than 25 degrees and the LOS is in or near the LM X-Z plane.

    At any time during P63 or P64, the magnitude of the look angle and the orientation of the look angle plane (that plane containing the LOS and the LM X axis) are defined by the inertial orientation of the LM X axis and the position of the LM with respect to the landing site.

    The inertial orientation of the LM X axis is controlled by requirements of thrust vector control. The orientation of the LM windows with respect to the look angle plane is controlled by rotation of the vehicle about the LM X axis.

12. The crew has the capability to display LGC calculated values of forward velocity, lateral velocity, altitude, and altitude rate on certain LM meters during this program. The calculation of these parameters is under control of the Landing Analog Display routine which is already in process.

13. The Rate of Descent (ROD) mode is not enabled during this program.

14. An abort from the lunar descent may be required at any time during the descent orbit injection, the descent coast, or the powered descent (P63), (P64), or (P66).

    For aborts after DPS ignition for the powered landing maneuver, time is critical. During this period an abort is nominally commanded by pushing one of two buttons in the LM. The abort may be commanded to use the descent stage (Abort button) or the ascent stage (Abort Stage button). If the descent stage is selected, and the DPS propellant approaches exhaustion, control must be switched to the ascent stage by the crew by ascent stage selection (Abort Stage button).

    During the powered landing maneuver the LGC will continuously monitor the Abort and the Abort Stage discretes, and upon receipt of either will terminate the program in process and call the appropriate abort program (DPS Abort program (P70) or APS Abort program (P71)). Both abort programs will guide the LM to an acceptable orbit.

    Monitoring the Abort and Abort Stage buttons is controlled by the Abort Discretes Monitor routine (R11) which is already in process.

This step can be locked out by setting the CHANBACKUP location (0374) in the computer to 000X1$_8$. This location can only be set by astronaut or ground loading and is not changed by Fresh Start or Restart.

P64 (continued)

15. If a thrusting maneuver is performed with the Guidance Control switch in PGNS and the Mode Control switch in Auto, the PGNS controls the total vehicle attitude and generates either Mode 1 or Mode 2 attitude errors for display on the FDAI. The crew may exercise control about only the yaw axis with the ACA (X-axis override) provided the X-axis override capability is permitted.

    If a thrusting maneuver is performed with the Guidance Control switch in PGNS and the Mode Control switch in Attitude Hold, the PGNS holds the vehicle attitude and generates either Mode 1 or Mode 2 attitude errors for display on the FDAI. The crew may exercise manual control about all vehicle axes with the ACA using either the Rate Command or Minimum Impulse mode. However, it is strongly recommended that powered flight not be attempted in the Minimum Impulse mode.

16. Control of the LM DPS, RCS, and APS is transferred from the PGNS to the Abort Guidance System (AGS) by placing the Guidance Control switch from PGNS to AGS.

    The AGS will be capable of taking over control of the LM during any portion of the lunar descent or ascent or during either of the abort programs (P70 or P71). The AGS will guide the LM to a safe orbit.

    The AGS may be initialized by the LGC at any time during this program by manual selection of the AGS Initialization routine (R47). However, it is not recommended that the AGS be initialized during powered flight because DAP attitude control is interrupted during the CDU zero part of the routine.

    In the event that the Guidance Control switch is changed from PGNS to AGS during a thrusting maneuver, the LGC will continue computation of position and velocity, the desired thrust vector, and the desired attitude errors. However, the PGNS will not be responsible if register overflows occur within the LGC.

17. The PGNS generates two types of errors for display on the FDAI as selected by the astronaut:

    a. Mode 1—Selected by Verb 61. Autopilot following errors are used as a monitor of the DAP's ability to track automatic steering commands.

    b. Mode 2—Selected by Verb 62. Total attitude errors used to assist the crew in manually maneuvering the vehicle.

18. The Load DAP Data routine (R03) has been performed prior to the start of the powered landing maneuver and should not be required during this program.

19. This program is automatically selected by the Braking Phase program (P63) at the completion of the P63 aim conditions.

20. Two alarm conditions may be originated by the PGNS powered landing equations:

    a. If Subroutine ROOTSPRS in the RG/VG calculation fails to converge in 8 passes the LGC will turn on the Program Alarm light, store Alarm Code 1406, and go immediately to the Final Automatic Request routine (R00). This alarm can occur only in P63 or P64.

    b. If an overflow occurs anywhere in the landing equations the LGC will turn on the Program Alarm light, store Alarm Code 1410, stop all vehicle attitude rates, and continue. This alarm can occur only in P63, P64, or P66.

21. This program allows manual control of the LM attitude. If manual control is desired, put the PGNS Mode Control switch in Attitude Hold and use the ACA to control the LM attitude.

    If P66 is desired, click the ROD switch while the PGNS Mode Control switch is in Attitude Hold. The ACA does not redesignate the landing site while the Mode Control switch is in Attitude Hold. To use the ACA to redesignate the landing site, put the Mode Control in Auto and rotate the ACA in the desired direction.

    NOTE: Landing Site Redesignation must be completed before P66 is selected because P64 cannot be reentered once it has been exited.

22. The crew can select a display of the LGC computed throttle setting by keying V16 N92.

P64 (continued)

Sequence of Events:

Flashing V06N64	Time Left for Redesignations/LPD Angle	XXbXX s/deg
	Altitude Rate	XXXX.X ft/s
	Computed Altitude	XXXXX. ft

Manual Throttle Control

TTCA – Advance until thrust = 10%, throttle control – MAN

V16N92E

Flashing V16N92	Percent of Full Thrust (10,500 lb)	00XXX%
	Altitude Rate	XXXX.X ft/s
		XXXXX. ft

To return to auto throttle
Throttle Control – AUTO
TTCA – minimum position

KEY REL

Flashing V06N64	Same display as above.

Manual Attitude Check
Mode Control (PGNS – Attitude Hold)

To use Landing Point designator
Verify Mode Control PGNS – AUTO

PRO

V06N64	Time Left for Redesignations/LPD Angle	XXbXX s/deg
	Altitude Rate	XXXX.X ft/s
	Computed Altitude	XXXXX. ft

Redesignate landing site as described (+ pitch redesignates landing site toward LM by 1 degree) (+ roll redesignates new site to right of present site by 1 degree in azimuth.) V06N64 changes the elevation LPD angle accordingly.

Manual Rate of Descent Control

PGNS – Attitude Hold. Activate ROD switch. Automatic Transfer to P66.

Automatic Transfer to ROD Control

When time remaining is zero – Automatic transfer to P66 occurs.

P66—LANDING PHASE (ROD) PROGRAM

Purpose:

1. To modify the rate of descent of the LM (with respect to the lunar surface) in response to astronaut originated inputs via the LM Rate of Descent (ROD) switch to the LGC.
2. To modify the inertial attitude of the LM in response to astronaut originated inputs via the attitude controller only if the Mode Control switch is in Attitude Hold.
3. To null the forward and lateral surface velocities of the LM when the Mode Control switch is in Auto and still respond to the Rate of Descent (ROD) switch inputs.
4. To update the LM state vector with vehicle acceleration and Landing Radar (LR) data.

Assumptions:

1. The LM is in the late stages of landing, with a low inertial velocity.
2. The Landing Radar (LR) is on, checked out, and providing to the LGC velocity and range information with respect to the moon. This information has been incorporated into the LM State Vector. The LGC/LR operation is under the control of the Descent State Vector Update routine (R12) which is already in process.
3. The entire powered landing maneuver (braking, approach, and landing) will be accomplished using the DPS engine.
4. The LM State Vector has been stored in the LGC since initialization by erasable register load. The LGC has updated this as required during thrusting. No further state vector updates from any source other than the LR will be accepted by this program.
5. The DPS is not throttlable over the whole range from 0 percent to maximum. It must be operated either at maximum throttle or over a specific throttle range of lower settings. These throttle settings are total throttle settings; that is, the sum of the manual setting (whose minimum is 10 percent) and the PGNS commanded setting.

   This program assumes the Throttle Control switch to be in Auto (the DPS receives the sum of the manual and PGNS commanded settings) and the manual throttle to be set at a level less than that required by the LGC.

   Nominally the throttle will remain within the allowable throttle range through this program.
6. During the powered landing maneuver, the LGC will monitor the presence or absence of the Auto Stabilization discrete. This discrete is issued to the LGC when the Mode Control switch is in the Auto position.

   In the Auto Stabilization mode, the PGNS will operate to null the forward and lateral surface velocities by controlling the inertial attitude of the spacecraft.

   In the Attitude Hold mode, the LGC will hold an inertial attitude. However, the attitude may be changed by manual control via the attitude controller.
7. The LPD option is not provided to the crew during this program.
8. The crew can display LGC calculated value of forward velocity, lateral velocity altitude, and altitude rate during this program. The calculation of these parameters is under the control of the Landing Analog Displays routine (R10) which is already in process.
9. During this program the LGC monitors the output of the Rate of Descent (ROD) switch in the LM. This switch is operated by the astronaut in response to his assessment of the present LM rate of descent based on out-of-window references and LM/DSKY displays.

   Switch operation is on an incremental basis: - (increase ROD) or + (decrease ROD). Each command results in an LGC—commanded change of "ROD SCALE" in LM rate of descent. (ROD SCALE is a value loaded into erasable storage prior to flight. Presently 1 foot per second.)
10. An abort from the lunar descent may be required at any time during descent coast or powered descent (P63, P64, or P66).

P66 (continued)

For aborts after DPS ignition for the powered landing maneuver, time is critical. During this period an abort is commanded by pushing one of two buttons in the LM. The abort may be commanded to use the descent stage (Abort button) or the ascent stage (Abort Stage button). If the descent stage is selected, and the DPS propellant approaches exhaustion, control must be switched to the ascent stage by the crew by ascent stage selection (Abort Stage button).

During the powered landing maneuver, the LGC will continuously monitor the Abort and Abort Stage discretes, and upon receipt of either will terminate the program in process and call the appropriate abort program (DPS Abort program (P70) or APS Abort program (P71)). Both abort programs will guide the LM to an acceptable orbit.

Monitoring the Abort and Abort Stage buttons is controlled by the Abort Discretes Monitor routine (R11) which is already in process.

This step can be locked out by setting the CHANBACKUP location (0374) in the computer to 000X1$_8$. This location can only be set by astronaut or ground loading and is not changed by Fresh Start or Restart.

11. If a thrusting maneuver is performed with the Guidance Control switch in PGNS and the Mode Control switch in Attitude Hold, the PGNS will hold the vehicle attitude and will generate either Mode 1 or Mode 2 attitude errors for display on the FDAI. The crew may exercise manual attitude control about all vehicle axes with the ACA in either the Rate Command or Minimum Impulse mode. It is strongly recommended that powered flight not be attempted in the Minimum Impulse mode.

    The LGC is not permitted to compute body rates via R60 during this program. The attitude will always be available for astronaut display so that they are aware of the impending S/C motion when switching from Attitude Hold to Auto.

12. Control of the LM DPS, RCS, and APS is transferred from the PGNS to the Abort Guidance System (AGS) by placing the Guidance Control switch from PGNS to AGS.

    The AGS will be capable of taking over control of the LM during any portion of the lunar descent or ascent or during either of the abort programs (P70 or P71). The AGS will guide the LM to a safe orbit.

    The AGS may be initialized by the LGC at any time by manual selection of the AGS Initialization routine (R47). However, it is not recommended that the AGS be initialized during powered flight because DAP attitude control is interrupted during CDU Zero in that routine.

    In the event the Guidance Control switch is changed from PGNS to AGS during a thrusting maneuver, the LGC will continue computation of position and velocity, the desired thrust vector, and the desired attitude errors; however, the PGNS will not be responsible if register overflows occur within the LGC.

13. The Load DAP Data routine (R03) has been performed prior to the start of the powered landing maneuver and should not be required during this program.

14. This program is automatically selected by the Landing Auto Modes Monitor routine (R 13) during the powered landing maneuver when:

    a. The targeted conditions for P64 are met (either automatically or astronaut flown).

    b. When the Rate of Descent (ROD) switch is activated by the astronaut after P63 throttle up in Attitude Hold.

    Once this program has been selected it is no longer possible to return to the completely automatic powered landing programs (P63 or P64).

15. The crew has the capability to select a display of the LGC computed throttle setting by keying in V16N92.

P66 (continued)

Sequence of Events:

Flashing	Forward Velocity	XXXX.X ft/s
V06N60	Altitude Rate	XXXX.X ft/s
	Computed Altitude	XXXXX. ft

Use ROD switch as desired.

To manually null forward and lateral velocities

Mode Control: PGNS – Attitude Hold

Forward (pitch) and lateral (roll) cross pointers

Manual Throttle

TTCA – Advance until thrust = 10%
Throttle Control – Manual

V16N92E

Flashing	Percent of Full Thrust	00XXX%
V16N92	Altitude Rate	XXXX.X ft/s
	Altitude	XXXXX. ft

To return to auto throttle
Throttle Control – Auto

TTCA – minimum position

KEY REL

Flashing	Forward Velocity	XXXX.X ft/s
V06N60	Altitude Rate	XXXX.X ft/s
	Computed Altitude	XXXXX. ft

At height actual = 5.6 ft., lunar contact light – ON

ENGINE STOP–PUSH

PRO

ENGINE ARM–OFF

P68—LANDING CONFIRMATION PROGRAM

Purpose:

1. To terminate landing program and DAP functions.
2. To initialize the LGC for lunar surface operation.
3. To permit the astronaut to prevent RCS jet firings on the lunar surface.

Assumptions:

1. This program is selected by the astronaut by DSKY entry. It is to be selected only after the LM has landed on the lunar surface (Program P66).
2. V37E68E selection of P68 will terminate Average G and command the engine off (see R00).
3. The selection of this program places the DAP in the Minimum Impulse mode. As long as the astronaut keeps the mode control in Attitude Hold, RCS jet firings will not occur, even while the platform is being torqued (in P57).
4. This program will not shut off the DAP. However, the attitude errors are zeroed and the maximum deadband is set. No jet firings should result until one of the following occurs in sufficient magnitude to cause the attitude errors to exceed the deadband:
   a. The moon rotates,
   b. The LM shifts on the lunar surface,
   c. The IMU gyros are torqued for alignment by P57,
   d. The IMU drifts.

   The DAP may be shut off by setting the Mode-Control-PGNS switch to Off.

Sequence of Events:

V37E68E

Flashing V06N43	Latitude	XXX.XX deg (+ north)
	Longitude	XXX.XX deg (+ east)
	Altitude	XXXX.X nmi

PRO
V76E, Mode Control (PGNS)—Attitude Hold, No DAP light on.

Flashing V37	Select New Program.

P70—DPS ABORT PROGRAM

Purpose:

1. To control a PGNS controlled DPS abort from the powered landing maneuver (P63, P64, or P66) when required.

Assumptions:

1. This program will control a DPS abort in one of two ways:
   a. If the altitude is greater than 25,000 feet, this program will command maximum DPS throttle, continue DPS thrusting, perform an attitude maneuver (using the RCS) to the correct attitude to continue the abort ascent, and complete the abort ascent to insert the LM into an abort orbit.
   b. If the altitude is less than 25,000 feet, this program will command maximum DPS throttle and enter a vertical rise phase which will terminate either when the LM altitude exceeds 25,000 feet or when both of the following conditions are met: the LM Y axis is within 5 degrees of the desired pitchover axis and the LM vertical velocity is greater than 40 ft/s.

   During the vertical rise phase, the vehicle is maneuvered to align the LM +X axis with the local vertical (using the RCS), and the LM +Y axis normal to the anticipated pitch maneuvers plane. The program will then pitch the LM to the correct attitude for ascent and complete the abort ascent to insert the LM into an abort orbit.

P70 (continued)

2. The LM is on the powered landing descent somewhere between DPS iginition for the maneuver (P63) and DPS shutdown on the lunar surface (P66).

3. The CSM is in a near circular orbit around the moon at a nominal altitude of 60 nautical miles. The CSM is maintaining a preferred tracking attitude for optical tracking of and RR tracking by the LM.

4. The IMU is on and accurately aligned to the landing orientation.

5. The Landing Radar (LR) is on and was checked out when in Position No. 1. The LGC/LR operation is under the control of the Descent State Vector Update routine (R12).

6. The Landing Analog Displays routine (R10) is enabled upon entry to this program, having been enabled by P63. R10 use of RR CDU's is inhibited by this program. R29 is enabled after completion of the vertical rise phase (if any). R10 and R29 are terminated upon termination of Average G.

7. The DPS is not throttlable over the whole range from zero to maximum. It must be operated either at maximum throttle or over a specific throttle range of lower settings. These throttle settings are total throttle settings; that is, the sum of the manual setting (whose minimum is 10 percent) and the PGNS commanded setting.

   This program assumes the Throttle Control switch to be in Auto (the DPS receives the sum of the manual and PGNS commanded settings) and the manual throttle to be set at a level less than that required by the LGC. The LGC will command maximum throttle for all DPS thrusting controlled by this program.

8. If a thrusting maneuver is performed with the Guidance Control switch in PGNS and the Mode Control switch in Auto, the PGNS controls the total vehicle attitude and generates either Mode 1 or Mode 2 attitude errors for display on the FDAI. The crew may exercise control about only the yaw axis with the ACA (X-axis override) provided the X-axis-override capability is permitted.

   If a thrusting maneuver is performed with the Guidance Control switch in PGNS and the Mode Control switch in Attitude Hold, the PGNS holds the vehicle attitude and generates either Mode 1 or Mode 2 attitude errors for display on the FDAI. The crew may exercise manual control about all vehicle axes with the ACA using either the Rate Command or Minimum Impulse mode. However, it is strongly recommended that powered flight not be attempted in the Minimum Impulse mode.

9. Control of the LM DPS, RCS, and APS is transferred from the PGNS to the Abort Guidance System (AGS) by placing the Guidance Control switch from PGNS to AGS.

   The AGS will be capable of taking over control of the LM during any portion of the lunar descent or ascent or during either of the abort programs (P70 or P71). The AGS will guide the LM to a safe orbit.

   The AGS may be initialized by the LGC at any time by manual selection of the AGS Initialization routine (R47).

   In the event that the Guidance Control switch is changed from PGNS to AGS during a thrusting maneuver, the LGC will continue computation of position and velocity, the desired thrust vector, and the desired attitude errors. However, the PGNS will not be responsible if register overflows occur within the LGC.

10. The PGNS generates two types of errors for display on the FDAI as selected by the astronaut:

    a. Mode 1--Selected by Verb 61. Autopilot following errors used as a monitor of the DAP's ability to track automatic steering commands.

    b. Mode 2—Selected by Verb 62. Total attitude errors used to assist the crew in manually maneuvering the vehicle

P70 (continued)

11. The Load DAP Data routine (R03) was completed prior to DPS ignition for the powered landing maneuver and should not be selected during this program.

12. During DPS burns only, the Pitch-Roll RCS jet autopilot (U and V jets) may be disabled (V65) or enabled (V75) by Extended Verb as shown. This capability is intended to be used to prevent LM and descent stage thermal constraint violations during CSM-docked DPS burns (P40). The capability exists during P63 also. Performance of FRESH START (V36E) will always enable the capability of the autopilot.

13. This program may be called in two ways:

    a. Abort button—If the Abort button is used during the powered descent it will be detected by the Abort Discretes Monitor routine (R11). R11 will then call this program.

    b. V37E 70E—This program may be called by the same procedure as other programs are manually called.

14. The LGC will not automatically select the APS Abort program (P71) if DPS fuel exhaustion occurs during execution of P70. The crew must anticipate DPS fuel exhaustion and select P71 by the Abort Stage button or by V37E 71E.

Sequence of Events:

ABORT PUSH (DURING P63, P64, or P66)

or

V37E70E

V06N94	VGX (LM) (+Up)	XXXX.X ft/s
	Altitude Rate	XXXX.X ft/s
	Computed Altitude	XXXXX.ft

To monitor Time-to-Go and cross range velocity.

V16N77E

V16N77	Time to Engine Cutoff	XXbXX min/s
	LM Velocity Normal to CSM Plane	XXXX.X ft/s
	Absolute Value of Inertial Velocity	XXXX.X ft/s

N85E

V16N85	VG_X (body)	XXXX.X ft/s
	VG_Y (body)	XXXX.X ft/s
	VG_Z (body)	XXXX.X ft/s

If burn is greater than 400 seconds, descent regulators close at PDI + 6:20. Then when VG_X = 100 ft/s, shut down DPS engine. DES ENG CMD OVRD and ENG ARM are OFF. NULL components of V16N85 display.

KEY REL

Flashing V16N94	VGX (LM) (+Up)	XXXX.X ft/s
	Altitude Rate	XXXX.X ft/s
	Computed Altitude	XXXXX. ft

ENG STOP — PUSH, ENG ARM—OFF, ABORT — Reset

PRO

Flashing V16N85	VG_X (body)	XXXX.X ft/s
	VG_Y (body)	XXXX.X ft/s
	VG_Z (body)	XXXX.X ft/s

V82E Display Orbital parameters.

Flashing V16N44	Apocenter Altitude	XXXX.X nmi
	Pericenter Altitude	XXXX.X nmi
	Time from Phase	XXbXX min/s

PRO

Flashing V16N85	Same as above.

PRO

Flashing V37	Select New Program.

P71—APS ABORT PROGRAM

Purpose:

1. To control a PGNS controlled APS abort from the powered landing maneuver (P63, P64, or P66) or a DPS Abort (P70) when required.

Assumptions:

1. The program will control an APS abort in one of two ways:

   a. If the altitude is greater than 25,000 feet this program will ignite the APS, continue APS thrusting, perform an attitude maneuver (using the RCS) to the correct attitude to continue the abort ascent, and complete the abort ascent to insert the LM into an abort orbit.

   b. If the altitude is less than 25,000 feet this program will ignite the APS, continue APS thrusting, enter a vertical rise phase which will terminate either when the LM altitude exceeds 25,000 feet or when both of the following conditions are met: the LM Y axis is within 5 degrees of the desired pitchover axis and the LM vertical velocity is greater than 40 ft/s.

      During the vertical rise phase the vehicle is maneuvered to align the LM +X axis with the local vertical (using the RCS) and the LM +Y axis normal to the anticipated pitch maneuver plane. The program will then pitch the LM to the correct attitude for ascent, and then complete the abort ascent to insert the LM into an abort orbit.

2. This program does not check to see if the DPS has been staged. Thus if P71 is selected via V37 and the descent stage has not been manually staged this program may command engine on (Assumption 1.a or 1.b above). In such cases the command will go to the DPS.

3. The CSM is in a near circular orbit around the moon at a nominal altitude of 60 nautical miles. The CSM is maintaining a perferred tracking attitude for optical tracking of and RR tracking by the LM.

4. The Landing Radar (LR) is on and was checked out when in Position No. 1. The LGC/LR operation is under the control of the Descent State Vector Update routine (R12).

5. The Landing Analog Displays routine (R10) is enabled upon entry to this program, having been enabled by P63. R10 use of the RR CDU's is inhibited by this program. R29 is enabled after completion of the vertical rise phase (if any). R10 and R29 are terminated upon termination of Average G.

6. If a thrusting maneuver is performed with the Guidance Control switch in PGNS and the Mode Control switch in Auto, the PGNS controls the total vehicle attitude and generates either Mode 1 or Mode 2 attitude errors for display on the FDAI. The crew may exercise control about only the yaw axis with the ACA (X-axis override) provided the X-axis override capability is permitted.

   If a thrusting maneuver is performed with the Guidance Control switch in PGNS and the Mode Control switch in Attitude Hold, the PGNS holds the vehicle attitude and generates either Mode 1 or Mode 2 attitude errors for display on the FDAI. The crew may exercise manual control about all vehicle axes with the ACA using either the Rate Command or Minimum Impulse mode. However, it is strongly recommended that powered flight not be attempted in the Minimum Impulse mode.

P71 (continued)

7. Control of the LM DPS, RCS, and APS is transferred from the PGNS to the Abort Guidance System (AGS) by placing the Guidance Control switch from PGNS to AGS.

   The AGS will be capable of taking over control of the LM during any portion of the lunar descent or ascent or during either of the abort programs (P70 or P71). The AGS will guide the LM to a safe orbit.

   The AGS may be initialized by the LGC at any time by manual selection of the AGS Initialization routine (R47).

   In the event that the Guidance Control switch is changed from PGNS to AGS during a thrusting maneuver, the LGC will continue computation of position and velocity, the desired thrust vector, and the desired attitude errors. However, the PGNS will not be responsible if register overflows occur within the LGC.

8. The PGNS generates two types of errors for display on the FDAI as selected by the astronaut.

   a. Mode 1—Selected by Verb 61. Autopilot following errors used as a monitor of the DAP's ability to track automatic steering comands.

   b. Mode 2—Selected by Verb 62. Total attitude errors used to assist the crew in manually maneuvering the vehicle.

9. The Load DAP Data routine (R03) was completed prior to DPS ignition for the powered landing maneuver and should not be selected during this program.

10. This program may be called in two ways:

    a. Abort Stage button—If the Abort Stage button is used during the powered descent or the DPS Abort program (P70), it will be detected by the Abort Discretes Monitor routine (R11). R11 will then call this program.

    b. V37E71E—This program may be called by the same procedure as other programs are manually called.

Sequence of Events:

ABORT STAGE—Push (During P63, P64, P66, or P70)

or

V37E71E

V06N94	VGX (LM) (+ Up)	XXXX.X ft/s
	Altitude Rate	XXXX.X ft/s
	Computed Altitude	XXXXX. ft

ENG START — Push, ENG ARM — ASC, RESET ENG STOP — if on, BAL CPL — on, System A and B ASC — FEED — OPEN, Main SOV — close, crossfeed — open.

To monitor time to go and cross range velocity.

V16N77E

V16N77	Time to Engine Cutoff	XXbXX min/s
	LM Velocity Normal to CSM Plane	XXXX.X ft/s
N85E	Absolute Value of Inertial Velocity	XXXX.X ft/s
V16N85	VG_X (body)	XXXX.X ft/s
	VG_Y (body)	XXXX.X ft/s
	VG_Z (body)	XXXX.X ft/s

At VG_X = 500 ft/s — enable APS fuel to RCS thrusters. MAIN SOV — open, Sys A and B ascent feed — close.

At VG_X = 200 ft/s enable automatic shutdown ENG — ARM — OFF.

[illegible] V16N85 displays

P71 (continued)

KEY REL

Flashing	VGX (LM) (+Up)	XXXX.X ft/s
V16N94	Altitude Rate	XXXX.X ft/s
	Computed Altitude	XXXXX. ft

ENG – STOP – reset

PRO

Flashing	VG_X (body)	XXXX.X ft/s
V16N85	VG_Y (body)	XXXX.X ft/s
	VG_Z (body)	XXXX.X ft/s

Display orbital parameters.

V82E

Flashing	Apocenter Altitude	XXXX.X nmi
V16N44	Pericenter Altitude	XXXXX. nmi
	Time from Phase	XXbXX min/s

PRO

Flashing	Select New Program
V37	

P72–CSM COELLIPTIC SEQUENCE INITIATION (CSI) TARGETING PROGRAM

Purpose:

1. To calculate parameters associated with the following concentric flight plan maneuvers for CSM execution of the maneuvers under the control of the CMC: the Coelliptic Sequence Initiation (CSI) and the Constant Delta Altitude maneuver (CDH).

Assumptions:

1. At a selected TPI time the line of sight between the CSM and the LM is selected to be a prescribed angle (E) from the horizontal plane defined at the CSM position.
2. The time between CSI ignition and CDH ignition must be computed to be greater than 10 minutes for successful completion of the program.
3. The time between CDH ignition and TPI ignition must be computed to be greater than 10 minutes for successful completion of the program.
4. CDH Delta V is selected to minimize the variation of the altitude difference between the orbits.
5. CSI burn is defined such that the impulsive Delta V is in the CSM horizontal plane at CSI ignition.
6. The pericenter altitude of the orbit following CSI and CDH must be greater than 35,000 feet (lunar orbit) or 85 nmi (earth orbit) for successful completion of this program.
7. The CSI and CDH maneuvers are assumed to be parallel to the plane of the LM orbit, however crew modification of Delta V(LV) components may result in an out-of-plane CSI maneuver.
8. The Rendezvous Radar may or may not be used to update the LM or CSM vectors for this program. If radar use is desired the radar was turned on and locked on the CSM by previous selection of P20. Radar sighting marks will be made automatically approximately once a minute when enabled. The rendezvous tracking mark counter is zeroed by the selection of P20 and after each thrusting maneuver.
9. The ISS need not be on to complete this program unless automatic state vector updating is desired by the Rendezvous Navigation program (P20). If selected, P20 will define the status of the ISS.

Sequence of Events:

P73--CSM CONSTANT DELTA ALTITUDE (CDH) TARGETING PROGRAM

Purpose:

1. To calculate parameters associated with the concentric flight plan maneuvers with the exception of Coelliptic Sequence Initiation (CSI) for CSM execution of the maneuvers under control of the CMC. The concentric flight plan maneuvers are the Coelliptic Sequence Initiation (CSI), the Constant Delta Altitude maneuver (CDH), the Transfer Phase Initiation (TPI), and the Transfer Phase Final (TPF) or braking maneuver.

Assumptions:

1. This program is based upon previous completion of the Coelliptic Sequence Initiation (CSI) Targeting program (P72). Therefore:

   a. At a selected TPI time the line of sight between the CSM and the LM was selected to be a prescribed angle (E) from the horizontal plane defined at the CSM position.

   b. The time between CSI ignition and CDH ignition was computed to be greater than 10 minutes.

   c. The time between CDH ignition and TPI ignition was computed to be greater than 10 minutes.

   d. The variation of the altitude difference between the orbits was minimized.

   e. CSI burn was defined such that the impulsive Delta V was in the CSM horizontal plane at CSI ignition.

   f. The pericenter altitudes of the orbits following CSI and CDH were computed to be greater than 35,000 feet (lunar orbit) or 85 nmi (earth orbit).

   g. The CSI and CDH maneuvers were assumed to be parallel to the plane of the LM orbit. However, crew modification of Delta V(LV) components may have resulted in an out-of-plane CSI maneuver.

   Unless the inputs to this program are changed from those values inserted in P72, the calculated parameters for the remaining maneuvers of the concentric flight plan will vary from those originally calculated and displayed only due to the continuous radar updating of the LM or CSM orbit.

2. The Rendezvous Radar may or may not be used to update the LM or CSM state vectors for this program. If radar use is desired the radar should have been turned on and locked on the CSM by previous selection of P20. Radar sighting marks will be made automatically approximately once a minute when enabled. The rendezvous tracking mark counter is zeroed by the selection of P20 and after each thrusting maneuver.

3. The ISS need not be on to complete this program unless automatic state vector updating is required by the Rendezvous Navigation program (P20). If selected, P20 will define the status of the ISS.

Sequence of Events:

This sequence of events is identical to P33. Record maneuver parameters and transmit to CSM.

P74 – CSM TRANSFER PHASE INITIATION (TPI) TARGETING PROGRAM

Purpose:

1. To calculate the required Delta V and other initial conditions required by the CMC for CSM execution of the Transfer Phase Initiation (TPI) maneuver. Given:
   a. Time of ignition (TIG(TPI)) or the elevation angle (E) of the CSM/LM LOS at TIG(TPI).
   b. Central angle of transfer (CENTANG) from TIG(TPI) to intercept time.
2. To calculate TIG(TPI) given E or E given TIG(TPI).

Assumptions:

1. This program is based upon previous completion of the Constant Delta Altitude (CDH) Targeting program (P73). Therefore:
   a. At a selected TPI time (now in storage) the line of sight between the CSM and the LM was selected to be a prescribed angle (E) (now in storage) from the horizontal plane defined at the CSM position.
   b. The time between CDH ignition and TPI ignition was computed to be greater than 10 minutes.
   c. The variation of the altitude difference between the orbits was minimized.
   d. The pericenter altitudes of the orbits following CSI and CDH were computed to be greater than 35,000 feet (lunar orbit) or 85 nmi (earth orbit).
   e. The CSI and CDH maneuvers were assumed to be parallel to the plane of the LM orbit. However, crew modification of Delta V(LV) components may have resulted in an out-of-plane CDH maneuver.

   Unless the inputs to this program are changed from those inserted in P72 and/or P73, the calculated parameters for the remaining maneuvers of the concentric flight plan will vary from those originally calculated and displayed only due to the continuous radar updating of the LM or CSM orbit.
2. The Rendezvous Radar may or may not be used to update the LM or CSM state vectors for this program. If radar use is desired the radar should be turned on and locked on the CSM by previous selection of P20. Radar sighting marks will be made automatically approximately once a minute when enabled. The rendezvous tracking mark counter is zeroed by the selection of P20 and after each thrusting maneuver.
3. There is no requirement for ISS operation during this program unless automatic state vector updating is desired by the Rendezvous Navigation program (P20). If selected, P20 will define the status of the ISS.
4. Once the parameters required for computation of the maneuver have been completely specified, the value of the active vehicle central angle of transfer is computed and stored. This number will be available for display to the astronaut through the use of V06 N52.

   The astronaut would call this display to verify that the central angle of transfer of the active vehicle is not within 170 to 190 degrees. If the angle is within this zone, the astronaut should reassess the input targeting parameters based upon Delta V and expected maneuver time.

Sequence of Events:

This sequence of events is identical to P34. Record maneuver parameters and

P75—CSM TRANSFER PHASE MIDCOURSE (TPM) TARGETING PROGRAM

Purpose:

1. To calculate the required Delta V and other initial conditions required by the CMC for CSM execution of the next midcourse correction of the transfer phase of an active CSM rendezvous.

Assumptions:

1. There is no requirement for ISS operating during this program, unless automatic state vector updating is desired by the Rendezvous Navigation program (P20). If selected, P20 will define the status of the ISS.
2. The Rendezvous Radar is on and is locked on the CSM. This was done during previous selection of P20. Radar sighting marks will be made automatically approximately once a minute when enabled. The rendezvous tracking mark counter is zeroed by the selection of P20 and after each thrusting maneuver.
3. The time of intercept (T(INT)) was defined by previous completion of the Transfer Phase Initiation (TPI) Targeting program (P74) and is presently available in LGC storage.
4. Once the parameters required for computation of the maneuver have been completely specified, the value of the active vehicle central angle of transfer is computed and stored. This number will be available for display to the astronaut through the use of V06 N52.

   The astronaut would call this display to verify that the central angle of transfer of the active vehicle is not within 170 to 190 degrees. If the angle is within this zone the astronaut should reassess the input targeting parameters based upon Delta V and expected maneuver time.

Sequence of Events:

This sequence is identical to P35 sequence. Record maneuver parameters and transmit to CSM.

P76/P77 CSM/LM State Vector Update Program

Purposes:

1. To provide a means of notifying the LGC that the CSM has changed its orbital parameters by the execution of a thrusting maneuver.
2. To provide to the LGC the Delta V applied to the CSM to enable an updating of the CSM or LM state vector.

Assumptions:

1. The LM crew has the Delta V to be applied to the CSM in local vertical axes at the specified TIG. These values are displayed prior to TIG by the thrusting programs (P40 and P41 in the CMC). No provision is made in these thrusting programs to display the results of the maneuver in a form usable by this program.
2. If the Rendezvous Navigation program (P20) or the Lunar Surface Navigation program (P22) is in process this program must be selected prior to the CSM thrusting maneuver. This can be assured by voice communication between the LM and CSM.

Sequence of Events:

V37E76E (CSM), V37E77E (LM)

Flashing V06N33	Time of Ignition of Other Vehicle	00XXX. h 000XX. min 0XX.XX s

PRO

Flashing V06N84 or Flashing V06N81	ΔV_X (LV of other vehicle)	XXXX.X ft/s
	ΔV_Y (LV of other vehicle)	XXXX.X ft/s
	ΔV_Z (LV of other vehicle)	XXXX.X ft/s
	ΔV_X (LV of this vehicle)	XXXX.X ft/s
	ΔV_Y (LV of this vehicle)	XXXX.X ft/s
	ΔV_Z (LV of this vehicle)	XXXX.X ft/s

P99–GUIDED RCS BURN (ERASABLE MEMORY PROGRAM)

Purpose:

1. To provide for a guided RCS burn that will be used to deorbit the LM ascent stage into a precise moon impact.

Assumptions:

1. The LM is the ascent stage only.
2. The erasable program for P99 has been previously uplinked and loaded into the computer.
3. A targeting program (P30–External Delta V Program or similar) has been performed prior to calling P99 for use.
4. The digital autopilot has been properly configured with a 5-degree deadband and correct ascent weight prior to use of this program.
5. The control of the spacecraft is PGNS in Auto with the Ascent Engine Arm switch at Off.
6. No more IMU alignments are allowed because the program overlays the AOT Mark and landing radar pad loads in EBANK7.

Sequence of Events:

(Via uplink)

V30E

P99 in mode light

Flashing V50N18 — Desired Automaneuver FDAI Angle — R XXX.XX deg; P XXX.XX deg; Y XXX.XX deg

V33E (Proceed) for trim
or
ENTER For no trim

V06N40 — Time from Ignitiion — XXbXX min/s
Velocity to be Gained — XXXX.X ft/s
ΔV (accumulated) — XXXX.X ft/s

TFI counts down until TIG -35 seconds when DSKY blanks for 5 seconds. V06N40 display returns.

At TIG ullage begins
At cutoff ullage stops

Flashing V16N40 — Time from Ignition — XXbXX min/s
Velocity go be Gained — XXXX.X ft/s
ΔV (accumulated)

V33E (Proceed)

Flashing V16N85 — ΔV_X (LM body) — XXXX.X ft/s
ΔV_Y (LM body) — XXXX.X ft/s
ΔV_Z (LM body) — XXXX.X ft/s

V33E (Proceed)

Flashing V37

00E

Go to Program P00

ASPO 45 CRT DISPLAYS

MSK–683 (CM)
MSK–966 (CM)
MSK–1123 (LM)
MSK–1137 (LM)

CSM GNC PRIMARY TAB

0683

GMT _____
GETA _____
CTE _____
CMC _____
CMCB _____
GETC _____
CMC Δ T _____
ISS _____ M
OPT _____ D
CMC _____ E
ID _____ _____

VERB	NOUN	PRGM
____	____	____

REG 1 _____
REG 2 _____
REG 3 _____

_____ DAP _____

RATE	DB
____	__

VEH ACC _____
VG X _____
VG Y _____
VG Z _____
PIPX _____
PIPY _____
PIPZ _____
PIP T _____
TEV _____
TIG _____

SITE _____

				QUADA	QUADB	QUADC	QUADD
WPU	CAL C		LBS				
HE	P/T R		PCT				
PKG	TEMP		°F				
HE	TK	P	PSIA				
HE	TK	T	°F				
HE	MN	P	PSIA				
FU	MN	P	PSIA				
OX	MN	P	PSIA				

CM-RCS				SYS 1	SYS 2
HE	TK	P	PSIA		
HE	MN	P	PSIA		
HE	TK	T	°F		

SPS			
OX	TK	PSI	
OX	IN	PSI	
EG	CH	PSI	
FU	TK	PSI	
FU	IN	PSI	
HE	TK	PSI	

		PITCH	YAW	ROLL
ISS ATT				
	ACDU			
	FCDU			
ERR	CMC			
	SCS			
RATE	ENT			
	C/W			
	SCS			
GMB CMD				
OCDU DC				
SPS GMB				
ΔT TVC				
MN TVC				
DIF CUR				

HE	TK	T	°F
OX	FD	LN	°F
FU	FD	LN	°F
OX	LN	I	°F
FU	LN	I	°F
EG	VLV		°F
N2	TA		PSI
N2	TB		PSI
OX	T1		PCT
OX	T2		PCT
FU	T1		PCT
FU	T2		PCT

ASPO-2

GMT	-	GREENWICH MEAN TIME	D H M S XX:XX:XX:XX	PIPX, PIPY, PIPZ	-	X, Y, AND Z PIPA COUNTS	±XXXXX DOUBLE
GETA	-	GROUND ELAPSED TIME (RECEIPT OF ANALOG DATA)	H M S XXXX:XX:XX	PIP T	-	PIPA TEMPERATURE	+XXX.X °F
CTE	-	CENTRAL TIMING EQUIPMENT TIME	H M S XXXX:XX:XX	TEV	-	TIME OF EVENT	H M S XXXX:XX:XX
CMC	-	CM COMPUTER CLOCK	H M S XXXX:XX:XX	TIG	-	TIME TO/FROM IGNITION	H M S XXXX:XX:XX
CMCB	-	CMC CLOCK MINUS △T UPDATED		IRG, ATT	-	IRS RESOLVER INDICATED ATTITUDE	+XXX.X DEG
GETC	-	GROUND ELAPSED TIME (RECEIPT OF COMPUTER WORDS)	H M S XXXX:XX:XX	ACDU	-	ACTUAL CDU ANGLES	+XXX.X DEG
CMC △T	-	DIFFERENCE BETWEEN GETC AND CMC	S XXX.XXX	FCDU	-	FINAL DESIRED CDU ANGLES	+XXX.X DEG
IRS	-	IRS MODE	OFF/TRN ON/CDU ZR/ CO ALN/FN ALN/ INERTL/CAGE	ERR CMC	-	COMPUTED ATTITUDE ERRORS TO FDAI	±XX.X DEG
				ERR SCS	-	SPS/RCS SELECTED ERROR DISPLAY (CMC OR SCS GENERATED)	±XX.X DEG
OPT	-	OPTICS MODE	OFF/ZERO/CMC/MAN	RATE ERR	-	RATES COMMANDED IN ENTRY DAP	±XX.X DEG/SEC
CMC	-	RCS CONTROL MODE	AUTO/HOLD/FREE/SCS	RATE G/N	-	DAP COMMANDED BODY RATES	±XX.X DEG/SEC
ID	-	IDENTIFICATION OF DOWNLIST BEING TRANSMITTED		RATE SCS	-	SCS DETERMINED BODY RATES	±XX.X DEG/SEC
*VERB	-	DSKY VERB DISPLAY	XX	GMB CMD	-	COMPUTER COMMANDED SPS GIMBAL COMMANDS	±XX.XX DEG
*NOUN	-	DSKY NOUN DISPLAY	XX	GCDU DC	-	GCDU DAC OUTPUT FOR GMB CMD	±XX.XX DEG
*PROG	-	DSKY PROGRAM NUMBER DISPLAY	XX	SPS GMB	-	SPS GIMBAL POSITION OUTPUTS FOR GMB CMD	±XX.XX DEG
REG1, REG2, REG3	-	DSKY ROWS 1, 2, AND 3	±XXXXX	AT TVC	-	SCS AUTOMATIC CONTROL SPS	±X.XX DEG
RATE	-	SELECTED MAXIMUM DAP RATE	X.X DEG/SEC	MN TVC	-	SCS MANUAL CONTROL SPS GIMBAL COMMANDS	±X.XX DEG
DB	-	SELECTED DAP DEADBAND	X.X DEG	SITE	-	SITE FROM WHICH DATA IS BEING RECEIVED	
VEH ACC	-	VEHICLE ACCELERATION	±XXX.X FPS^2	DIF CUR	-	SPS GIMBAL MOTOR DIFFERENTIAL CLUTCH CURRENT	+XXX MA
VG X, VG Y, VG Z	-	VELOCITY TO BE GAINED IN SM COORDINATES	±XXXX. FPS				

*SEE CM SOFTWARE SECTION FOR FURTHER DEFINITION

CMC MONITOR 1 H/S

0966

ID _____ GMT _____ SITE _____

CTE _____

GETA _____

GETC _____

CMCB _____

CMC _____

TCMSV _____

TLMSV _____

TGO _____

TIG _____

TEVNT _____

FGWD	0	
FGWD	1	
FGWD	2	
FGWD	3	
FGWD	4	
FGWD	5	
FGWD	6	
FGWD	7	
FGWD	8	
FGWD	9	
FGWD	10	
FGWD	11	
CHNL	11	
CHNL	12	
CHNL	13	
CHNL	14	
CHNL	30	
CHNL	31	
CHNL	32	
CHNL	33	
IMDE	30	
IMDE	33	
OPTMDE		
DPDTR1		
DPDTR2		

PG ___ FL ___ WARN ___

VB ___ NN ___ PRG ___

KKK ___

R1 _____ UPFST ___

R2 _____ UPSW ___

R3 _____ CMD ___

REDO DSTB11 _____

_____ FALRG CHNL 77

RSBBQ _____ _____

_____ _____ C31FW

_____ _____ _____

HLDFG INTEG TIME

RCSFG

STARID1 _____

STARID2 _____

CDU SHFT _____

CDU TRUN _____

		X/ROLL	Y/PITCH	Z/YAW
	PIPA			
	DELV			
	VGIMU			
	FCDU			
	DCDU			
	ACDU			
	ERROR			
	AK			
	ADOT			
	OMGAC			
P	ERR			
I	BIAS			
P	OCTL			
LM		ACTOFF		
CSM		GMBCMD		

RAPO _____ TCSI _____

HPER _____ TGDH _____

LAT _____ TTPI _____

LONG _____ TTPF _____

VMAG1 TMRK _____

VCTL1 _____ TVHF _____

ΔT _____ VHFRNG NM _____

CDH ΔH _____ ELEVN ANG _____

VHF _____ OPT _____ CNTRL ANG _____

ΔVLVX _____ Y _____ Z _____

ΔVR/PX _____ Y _____ Z _____

ID	-	IDENTIFICATION OF DOWNLIST BEING TRANSMITTED	
SITE	-	SITE FROM WHICH DATA IS BEING RECEIVED	
*FLWD 0 - FLWD 11	-	COMPUTER FLAGWORDS 0 THRU 11	XXXXX_8
*CHAN 11 - CHAN 14	-	COMPUTER OUTPUT CHANNELS	XXXXX_8
*CHAN 30 - CHAN 33	-	COMPUTER INPUT CHANNELS	XXXXX_8
*IMDE30, IMDE33	-	COMPUTER IMU STATUS REGISTERS	XXXXX_8
*OPTMDE	-	COMPUTER OPTICS STATUS REGISTER	XXXXX_8
*DPDTR1, DPDTR2	-	DATA FOR DAP SELECTION AND OPERATION	XXXXX_8
GMT	-	GREENWICH MEAN TIME	D H M S XX:XX:XX:XX
CTE	-	CENTRAL TIMING EQUIPMENT TIME	H M S XXXX:XX:XX
GETA	-	GROUND ELAPSED TIME (RECEIPT OF ANALOG DATA)	H M S XXXX:XX:XX
GETC	-	GROUND ELAPSED TIME (RECEIPT OF COMPUTER WORDS)	H M S XXXX:XX:XX
CMCB	-	CMC CLOCK MINUS ΔT UPDATED	H M S XXXX:XX:XX
CMC	-	CM COMPUTER CLOCK	H M S XXX:XX:XX.XX
TCMSV	-	TIME OF CM STATE VECTOR	H M S XXX:XX:XX.XX
TLMSV	-	TIME OF LM STATE VECTOR	H M S XXX:XX:XX.XX
TGO	-	TIME TO CUTOFF	H M S XXX:XX:XX
TIG	-	TIME TO/FROM IGNITION	H M S XXX:XX:XX.XX
TEVNT	-	TIME OF EVENT	H M S XXX:XX:XX.XX
*PG	-	COMPUTER PROGRAM NUMBER	XX
FL	-	VERB/NOUN FLASHER STATUS	

WARN	-	CMC WARNING LAMP STATUS	
PRG	-	PROGRAM ALARM LAMP STATUS	
XNX	-	UPLINK DATA STATUS	
UPFST	-	BLOCK UPLINK DISCRETE STATUS	
UPSW	-	UPLINK ACCEPT/BLOCK SWITCH STATUS	
CMD	-	UPLINK TOO FAST STATUS	
*VB	-	DSKY VERB DISPLAY	XX
*NN	-	DSKY NOUN DISPLAY	XX
R1, R2, & R3	-	DSKY ROW 1, ROW 2, AND ROW 3 DISPLAYS	+XXXXX
REDO	-	NUMBER OF RESTARTS	XXXXX_8
RSBBQ	-	VALUE OF BBANK AND Q REGISTERS AT THE TIME OF A RESTART	XXXXX_8
DSTB11	-	DISPLAY TABLE OF DSKY STATUS LIGHTS $X0400_8$ = PROGRAM CAUTION, $X0200_8$ = TRACKER WARNING, $X0020_8$ = NO ATTITUDE, $X0040_8$ = GIMBAL LOCK	XXXXX_8
*FALRG	-	1ST, 2ND AND MOST RECENT ALARM CODES	XXXXX_8
CHNL 77	-	CHANNEL 77 - RESTART MONITOR	XXXXX_8
C31FW	-	SWITCH OVERRIDE BUFFER FOR SC CONTROL, CMC MODE AND OPTICS MODE	XXXXX_8
*KLDFLG	-	DELAY TIME FOR CDU TRANSIENT CHECK AFTER MARK (CDUCKWD)	XXXXX_8
INTEG TIME	-	TIME TO WHICH STATE VECTOR IS PRESENTLY INTEGRATED	H M S XXX:XX:XX.XX
*RCSFG	-	DATA FOR RCS DAP	XXXXX_8
STARID1	-	IDENTIFICATION NUMBER OF STAR 1	XXX_8
STARID2	-	IDENTIFICATION NUMBER OF STAR 2	XXX_8
CDU SHAFT	-	OPTICS SHAFT ANGLE	$\pm$XXX.XX DEG
CDU TRUN	-	OPTICS TRUNNION ANGLE	$\pm$XX.XXX DEG

*SEE CM SOFTWARE SECTION FOR FURTHER DEFINITION

MSK-966 (Continued)

PIPA	-	PIPA COUNTS	±XXXXX COUNTS				
DELV	-	VALUES OF PIPA'S AT LAST READING, CORRECTED FOR SCALE FACTOR ERROR AND BIAS	±XXXX.X FPS				
VGIMU	-	VELOCITY TO BE GAINED IN SM COORDINATES	±XXXX.X FPS				
FCDU	-	FINAL DESIRED CDU ANGLES	+XXX.XX DEG				
DCDU	-	DESIRED CDU ANGLES	+XXX.XX DEG				
ACDU	-	ACTUAL CDU ANGLES	+XXX.XX DEG				
ERROR	-	RCS DAP FOLLOWING ERRORS	±X.XXX DEG				
AK	-	RCS DAP ATTITUDE ERRORS OR TVC DAP ATTITUDE ERRORS	±X.XXX DEG				
ADOT	-	RCS DAP COMPUTED CONTROL AXIS RATES OR TVC DAP COMPUTED BODY RATES (OMEGAB)	±X.XXX DEG/SEC				
OMEAC	-	RCS DAP CONTROL AXIS RATE COMMANDS (WBODY) OR TVC DAP BODY RATE COMMANDS FROM CROSS PRODUCT STEERING (OMEGAC)	±X.XXX DEG/SEC				
ERR	-	MEASURED BIAS MINUS LOADED COMPENSATION	±X.XXXX FT/SEC				
BIAS	-	MEASURED BIAS (10 SECOND INTERVALS)	±X.XXXX FT/SEC				
OCTL	-	OCTAL VALUE OF LOADED BIAS COMPENSATION	XXXXXg				
IM	-	PRESENT MASS OF THE LM	XXXXX LBS				
CSM	-	PRESENT MASS OF THE CSM	XXXXX LBS				
ACTOFF	-	SPS GIMBAL TRIMS	±XX.XXX DEG				
GMBCMD	-	COMPUTER COMMANDED SPS ENGINE COMMANDS	±XX.XXX DEG				
HAPO	-	ALTITUDE AT APOGEE	+XXXX.X NM				
HPER	-	ALTITUDE AT PERIGEE	+XXXX.X NM				
LAT	-	LATITUDE OF LANDMARK	±XX.XXX DEG				
LONG	-	LONGITUDE OF LANDMARK	±XXX.XX DEG				
VMAGI	-	PRESENT INERTIAL VELOCITY (TLI)	XXXXX FT/SEC				
VGTLI	-	VELOCITY TO BE GAINED (TLI)	XXXXX FT/SEC				
				ΔT	-	DIFFERENCE BETWEEN GETC AND GMC	M S XXX:XX.XXX
				CDH ΔH	-	DIFFERENCE IN ALTITUDE BETWEEN VEHICLES AT CDH	±XX.XX NM
				VHF	-	VHF MARKS INCORPORATED IN STATE	XX
				OPT	-	OPTICS MARKS INCORPORATED IN STATE	XX
				Δ VLV	-	X, Y, AND Z COMPONENTS OF DELTAV IN LOCAL VERTICAL COORDINATES	±XXXX.X FT/SEC
				ΔVR/P	-	X, Y, AND Z COMPONENTS OF DELTAV FROM LAMBERT SOLUTION IN SM COORDINATES	±XXXX.X FT/SEC
				TCSI	-	TIME OF INITIATION OF CSI	H M S XXX:XX:XX.XX
				TCDH	-	TIME OF INITIATION OF CDH	H M S XXX:XX:XX.XX
				TTPI	-	TIME OF INITIATION OF TPI	H M S XXX:XX:XX.XX
				TTPF	-	TIME OF INITIATION OF TPF	H M S XXX:XX:XX.XX
				TMRK	-	TIME OF LAST OPTICS MARK	H M S XXX:XX:XX.XX
				TVHF	-	TIME OF LAST VHF MARK	H M S XXX:XX:XX.XX
				VHFRNG	-	RAW VHF RANGE TO LM	±XXX.XX NM
				ELEVN ANG	-	DESIRED LOS ANGLE AT TPI	±XXX.XX DEG
				CNTRL ANG	-	ORBITAL CENTRAL ANGLE OF THE PASSIVE VEHICLE DURING TRANSFER FROM TPI TO INTERCEPT	±XXX.XX DEG

*SEE CM SOFTWARE SECTION FOR FURTHER DEFINITION

THIS PAGE INTENTIONALLY LEFT BLANK

LM GUID, CONTROL AND PROP RT

AEA	LGC	PCM

1123

GET _____ MET _____

AGS _____ LGC _____ LGC FMT _____ SITE _____

T/E _____ TGO _____ TTF/8 _____

PGNS RATE			
RGA RATE			
ASA RATE			
	ROLL/Z	PITCH/Y	YAW/X
ATT CMDS			
RSVR GMBL			
	FDAI ATTITUDES		
ICDUD ATT			
IMU ATT			
GDUA ATT			
AGS ATT			
	ATTITUDE ERRORS		
PGNS ERR			
AGS ERR			
	VELOCITIES		
LGC DEL V			
AGS DEL V			
AGS ULL		ACT VEL	

VEH WT

LGC _____

CAL _____

TORQUE

+U _____

-U _____

+V _____

-V _____

AUTO _____ _____ FO _____

R _____ ATT H _____ _____ F1 _____

P _____ LR F2 _____

Y _____ AP _____ DEDA _____ DSKY _____

RR _____ ALT _____ V _____ AD _____ P _____

TRK _____ RO _____ V _____

R _____ SR _____ CLR _____ N _____

RDT _____ VX _____ M _____ 1 _____

SH _____ VY _____ 2 _____

TR _____ VZ _____ REDO _____ 3 _____

GTC _____

CMD _____

POS _____

TH _____

ASPO-8

GET	-	GROUND ELAPSED TIME	H M S XXX:XX:XX
MET	-	MISSION ELAPSED TIME	H M S XXX:XX:XX
AGS	-	ABORT GUIDANCE SYSTEM TIME	H M S XXX:XX:XX
LGC	-	LM GUIDANCE COMPUTER TIME	H M S XXX:XX:XX
LGC FMT	-	IDENTIFICATION OF DOWNLIST BEING TRANSMITTED	
SITE	-	IDENTIFICATION OF SITE FROM WHICH DATA IS BEING RECEIVED	
TGO	-	TIME TO GO UNTIL ENGINE CUTOFF	M S XX:XX
TTF/8	-	TIME TO GO UNTIL END OF PHASE (DESCENT PROGRAMS)	M S XX:XX
T/E	-	TIME OF EVENT	H M S XXX:XX:XX
PGNS RATE	-	ROLL, PITCH, YAW DAP RATES	XX.X DEG/SEC
RGA	-	AGS BODY MOUNTED RATE GYRO (OUTPUT)	XX.X DEG/SEC
ASA	-	AGS ABORT SENSING ASSEMBLY (BODY RATES)	XX.X DEG/SEC
ATT CMDS	-	LGC ATTITUDE COMMANDS	XX.X DEG
RSVR GMBL	-	LX RESOLVER GIMBAL ANGLES	XXX.X DEG
ICDUD ATT	-	DESIRED CDU ANGLES TO THE DAP	XXX.X DEG
CDUA ATT	-	ACTUAL CDU ANGLES	XXX.X DEG
IMU ATT	-	LX RESOLVER GIMBAL ANGLES	XXX.X DEG
AGS ATT	-	ABORT GUIDANCE SYSTEM BODY ANGLES	XXX.X DEG
PGNS ERR	-	CDU-DAC OUTPUT	XX.X DEG
AGS ERR	-	ABORT GUIDANCE SYSTEM ATTITUDE ERRORS	XXX.X DEG
LGC DEL V	-	PIPA OUTPUT FOR A 2 SECOND INTERVAL	XX.X FT/SEC
AGS DEL V	-	ABORT GUIDANCE SYSTEM MEASURED VELOCITY	XX.X FT/SEC
AGS ULL	-	ABORT GUIDANCE ULLAGE MEASUREMENT	XX.XX FT/SEC
ACT VEL	-	ACCUMULATED VELOCITY ALONG THRUST	XX.X FT/SEC
AUTO	-	AUTO STABILIZATION MODE STATUS	XX/BLANK
R, P, Y	-	ROLL, PITCH AND YAW ACHIEVED FROM PULSES, DIRECT OR AUTO (NORM)	±XXX.X DEG
ATT H	-	ATTITUDE HOLD MODE STATUS	XX/BLANK
*F0	-	FIRST	
*F1 ALARM CODES	-	SECOND	
*F2	-	MOST RECENT	
*RR	-	RADAR MODE FLAGWORD (RADMODES)	XXXXX8
TRK	-	RADAR TRACK ENABLE	CH 12 B 14
RDT	-	RENDEZVOUS RADAR RANGE RATE	XXXX FT/SEC

R	-	RENDEZVOUS RADAR RANGE	XXX.XX NM
SH	-	RENDEZVOUS RADAR SHAFT ANGLE	±XXX DEG
TR	-	RENDEZVOUS RADAR TRUNNION ANGLE	±XXX DEG
AP	-	LANDING ANTENNA POSITION	1 OR 2
ALT	-	LR ALTITUDE DATA GOOD	BLANK/XX
V	-	LR VELOCITY DATA GOOD	BLANK/XX
SR	-	LANDING RADAR RANGE	XXXXX FT
V_X, V_Y, V_Z	-	LANDING RADAR VELOCITIES	±XXXXX FT/SEC
DEDA	-	AGS DSKY	
AD	-	ADDRESS	
RO	-	READOUT	
CLR	-	CLEAR	
M	-	REGISTER 5 DIGIT CONTENTS	
REDO	-	NUMBER OF LGC RESTARTS	
DSKY	-	STATUS OF DSKY DISPLAYS	BLANK/FLSH
*P	-	PROGRAM	
*V	-	VERB	
*N	-	NOUN	
1 2 3	-	ROW 1, 2, AND 3	
LGC	-	LGC CALCULATED LM WEIGHT	XXXXX LBS
CAL	-	GROUND CALCULATED LM WEIGHT	XXXXX LBS
TORQUE +U, -U, +V, -V	-	ACCUMULATED SUM OF + AND - COMMANDED TORQUE TIME ABOUT CONTROL AXES	XX.X SEC
TH	-	GROUND CALCULATED THRUST	XXXXX LBS
GTC	-	GUIDANCE THRUST COMMAND	XXX %
CMD	-	SUM OF MANUAL AND AUTO THROTTLE COMMAND	XXX %
POS	-	THROTTLE POSITION	XXX %

*SEE LM SOFTWARE SECTION FOR FURTHER DEFINITION

GET _____ LGC _____ GMT _____

THRTL _____

SELECT _____

DECA _____

MAN THR _____

AUTO THR _____

CMD THR _____

VAR ACT _____

GUID CMD _____

TCP _____

	ROLL-R	PITCH-Q	YAW-P
LGC XXXXX	___.__	___.__	___.__
AGS ERR	___.__	___.__	___.__
OMEGA-D	___.__	___.__	___.__
OFFSET	___.__	___.__	___.__ **
GMBL DR	_____	_____	

SC	TORQ-U	TORQ-V	TORQ-P
AUTO ___	+___.__	+___.__	+___.__
A/H ___	-___.__	-___.__	-___.__

AEA _____ LGC _____ PCM _____

WT	
CSM	
BUG	
DAP	
C 11	
C 12	
C 13	
C 14	

1137

SITE _____

D/L _____

_____ C5 MSK

_____ C6 MSK

_____ C 30

_____ C 31

_____ C 32

_____ C 33

_____ RAD

ATTITUDES

	ROLL-Z	PITCH-Y	YAW-X
B			
OCTAL			
RSVRS			
ACDU			
RSVR			
ACT			
IDES			
FDES			
AGS			
ΔERR			

RATES

PGNS-B		
RGA-B		

DELTA VELOCITIES

AGS-B		
LGC-B		
ACT ΔV		
PIP-S		
SM		

STATUS

___ DAP ___

TIG	
TGO	
T/E	
T/P	
LGC	
ISS	
PGNS	
CH 77	
FREG0	
FREG 1	
FREG 2	
RED0	
PROG	
VERB	
NOUN	
FL	
R1	
R2	
R3	

VEL GAIN

LR

LR RNG _____ VEL _____

LR _____

	PGNSΔ	AGSΔ
VXS		
VYS		
VZS		
RNG		

RR

MODE		
DATA		

SHFT TRUN

LGC		
RR		
ERR		
RANGE		M
RNGRT		K

POWER TEMPS

800 ∿		LR	
3200 ∿		RR	
120V		PIP	
BIAS			

ASPO-10

GET	-	GROUND ELAPSED TIME	H M S XXX:XX:XX
LGC	-	LM COMPUTER CLOCK	H M S XXX:XX:XX
GMT	-	GREENWICH MEAN TIME	H M S XXX:XX:XX
SITE	-	SITE FROM WHICH DATA IS BEING RECEIVED	
D/L	-	DOWNLIST IDENTIFICATION	
SELECT	-	THROTTLE SELECT SWITCH STATUS	AUTO/BLANK
DECA	-	DESCENT THROTTLE COMMAND	±XXX.XX
MAN THR	-	MANUAL THROTTLE COMMAND	XXX%
AUTO THR	-	AUTO THROTTLE COMMAND	XXX%
CMD THR	-	TOTAL THROTTLE COMMAND (MAN THR + AUTO THR)	XXX%
VAR ACT	-	VARIABLE ACTUATOR POSITION	XXX%
GUID CMD	-	LGC COMMANDED THRUST	XXX%
TCP	-	THRUST CHAMBER PRESSURE	XXX%
LGC XXXXX - ERR	=	TOTAL OF DAP FOLLOWING ATTITUDE ERRORS	±XX.X DEG
- RATES	=	LGC COMPUTED BODY RATES	
AGS ERR	-	AGS POSITIONAL ERROR	±XXX.X DEG
OMEGA-D	-	DESIRED BODY RATES FOR AUTOMATIC MANEUVER	±X.XX DEG/SEC
OFFSET	-	COMPUTED ANGULAR ACCELERATION ABOUT Y AND Z BODY AXES DUE TO THE ENGINE	±XX.XXX DEG/SEC^2
GMBL DR	-	DIRECTION OF ENGINE BELL MOTION	±R & ±P
A/H	-	ATTITUDE HOLD MODE STATUS	XX/BLANK
AUTO	-	AUTO STABILIZATION MODE STATUS	XX/BLANK
+ TORQ-U, TORQ-V, TORQ-P	-	CUMMULATIVE SUM OF POSITIVE COMMANDED TORQUE ABOUT CONTROL AXES U, V, AND P RESPECTIVELY	XX.XX SECS
- TORQ-U, TORQ-V, TORQ-P	-	CUMMULATIVE SUM OF NEGATIVE COMMANDED TORQUE ABOUT CONTROL AXES U, V, AND P RESPECTIVELY	XX.XX SECS
**	-	DAP DATA LOAD	

WT	-	MASS OF THE LM	XXXXX LBS
CSM	-	MASS OF THE CSM	XXXXX LBS
BUG	-	FLAGWORD FOR ENABLING ABORT SWITCHES MONITOR & AUTO THROTTLE MONITOR	$000XX_8$
*DAP	-	DAP FLAGWORD (DAPBOOLS)	XXXXX_8
*C11 - C14	-	LM COMPUTER OUTPUT CHANNELS	XXXXX_8
*C5MSK - C6MSK	-	FLAGWORDS FOR INHIBITING DAP FIRING OF JETS	XXX_8
*C30 - C33	-	LM COMPUTER INPUT CHANNELS	XXXXX_8
*RAD	-	RADAR FLAGWORD (RADMODES)	XXXXX_8
B	-	ΔPIPA COUNTS Δ TIME, PIPA FREE FALL BIAS (GROUND COMPUTED)	±XXX.XXX CM/SEC^2
OCTAL	-	COMPUTED OCTAL LOADS FOR LGC PIPA BIAS REGISTERS	XXXXX_8
RSVRS	-	GIMBAL RESOLVER INDICATED ANGLES	+XXX.XX DEG
ACDU	-	ACTUAL CDU ANGLES	+XXX.XX DEG
RSVR	-	GIMBAL RESOLVER INDICATED ANGLES IN FDAI COORDINATES	+XXX.XX DEG
ACT	-	LM ATTITUDE TRANSFORMED TO FDAI COORDINATES	+XXX.XX DEG
IDES	-	INTERMEDIATE DESIRED CDU ANGLES TRANSFORMED TO FDAI COORDINATES	+XXX.XX DEG
FDES	-	FINAL DESIRED CDU ANGLES TRANSFORMED TO FDAI COORDINATES	+XXX.XX DEG
AGS	-	AGS EULER ANGLES TRANSFORMED TO FDAI COORDINATES	+XXX.XX DEG
ΔERR	-	DIFFERENCE BETWEEN PGNS EULER ANGLES AND AGS EULER ANGLES	±XX.XX DEG

*SEE LM SOFTWARE SECTION FOR FURTHER DEFINITION

MSK-1137 (continued)

PGNS-B	-	DAP COMPUTED BODY RATES	±XX.XX DEG/SEC	LR	-	LANDING RADAR ANT POSITION	ONE/TWO
RGA-B	-	AGS RATE GYRO OUTPUTS IN BODY COORDINATES	±XX.X DEG/SEC	LR RNG	-	STATUS OF LANDING RADAR RANGE DATA	GOOD/BAD
AGS-B	-	AGS INDICATED LINEAR VELOCITY IN BODY COORDINATES	±XX.X FT/SEC	VEL	-	STATUS OF LANDING RADAR VELOCITY DATA	GOOD/BAD
LGC-B	-	ACCUMULATED PIPA COUNTS WHILE SERVICER IS RUNNING IN BODY AXIS COORDINATES	±XX.X FT SEC	VXS, VYS, VZS	-	LR VELOCITY DATA CONVERTED TO STABLE MEMBER COORDINATES	±XXXX FT SEC
ACT ΔV	-	ACTUAL DELTA V GAINED (GROUND COMPUTED)	XX.X FT SEC	RNG	-	LANDING RADAR SLANT RANGE	XXXXX FT
PIP-S	-	PIPA COUNTS	XXXXX_{10}	PGNS Δ	-	CORRECTED PGNS VELOCITIES CORRECTED FOR LUNAR GRAVITY IN STABLE MEMBER COORDINATES	±XXXX FT/SEC
SM	-	ACCUMULATED PIPA COUNTS OVER 2 SECONDS IN STABLE MEMBER COORDINATE	±XX.X FT/SEC	AGS Δ	-	AGS VELOCITIES CORRECTED FOR LUNAR GRAVITY IN STABLE MEMBER COORDINATES	±XXXX FT/SEC
DAP	-	LEFT - POSITION OF GUIDANCE AND CONTROL SWITCH	AGS/PGNS				
		RIGHT - STATUS OF THE DAP	ON/OFF	MODE	-	STATUS OF RENDEZVOUS RADAR	LGC/AUTO/MAN P - NO EN ONE/TWO
TIG	-	TIME OF IGNITION	H M S XXX:XX:XX	DATA	-	STATUS OF RENDEZVOUS RADAR DATA	GOOD/BAD, TRK/NO TRK CO/HIGH
TGO	-	TIME TO ENGINE CUTOFF	S XXXXX.	____/CDUF	-	STATUS OF RR CDU'S	BLANK/CDUF
T/E	-	TIME OF LAST/NEXT SIGNIFICANT EVENT	H M S XXX:XX:XX	LGC	-	RENDEZVOUS RADAR ANTENNA POSITION (CDU)	±XXX.X DEG
T/P	-	TIME TO END OF PHASE (DESCENT ONLY)	S XXXXX.	RR	-	RENDEZVOUS RADAR ANTENNA POSITION IN FDAI COORDINATES	±XXX.X DEG
LGC	-	LGC WARNING LAMP STATUS		ERR	-	COMPUTER COMMANDED RENDEZVOUS RADAR ANTENNA RATE	±XX.XX DEG/SEC
ISS	-	ISS WARNING LAMP STATUS					
PGNS	-	PGNS CAUTION LAMP STATUS		RANGE	-	RENDEZVOUS RADAR RANGE	XXX.XX NMI
*CH77	-	DEFINITION FOR CAUSE OF LGC WARNING	XXXXX_8	RNGRT	-	RENDEZVOUS RADAR RANGE RATE	±XXXX FT/SEC
*FREG0, FREG1, FREG2	-	1ST, 2ND, AND MOST RECENT ALARM CODE	XXXXX_8	800 ∿	-	800 ∿ VOLTAGE	XX.X VOLTS
*REDO	-	NUMBER OF RESTARTS	XXXXX_8	3200 ∿	-	3200 ∿ VOLTAGE	XX.X VOLTS
*PROG	-	COMPUTER PROGRAM NUMBER	XX	120V	-	120 VDC PIPA SUPPLY VOLTAGE	XXX VOLTS
*VERB	-	DSKY VERB DISPLAY	XX	BIAS	-	FM BIAS VOLTAGE	X.XX VOLTS
*NOUN	-	DSKY NOUN DISPLAY	XX	LR	-	LANDING RADAR ANTENNA TEMPERATURE	±XXX.X °F
FL	-	INDICATES WHETHER OR NOT VERB/NOUN FLASHER IS ON	FLSH/BLANK	RR	-	RENDEZVOUS RADAR ANTENNA TEMPERATURE	±XXX.X °F
*R1, R2, R3	-	DSKY ROW 1, ROW 2, AND ROW 3 DISPLAYS	±XXXXX	PIP	-	PIPA TEMPERATURE	+XXX.X °F

*SEE LM SOFTWARE SECTION FOR FURTHER DEFINITION.

LAUNCH AND BURN SCHEDULE

TRANSLUNAR INJECTION
MIDCOURSE CORRECTIONS
LUNAR ORBIT INSERTION
DESCENT ORBIT INSERTION
LM DESCENT AND LANDING
LM ASCENT AND RENDEZVOUS
TRANSEARTH INJECTION
MIDCOURSE CORRECTIONS
ENTRY

PRELAUNCH IMU COMPENSATION

CM

POSITION	GYRO DRIFTS			PIPA	
	NBD (meru)	ADIA (meru/g)	ADSRA (meru/g)	BIAS (cm/s^2)	SCALE FACTOR (ppm)
X					
Y					
Z					

LM

POSITION	GYRO DRIFTS			PIPA	
	NBD (meru)	ADIA (meru/g)	ADSRA (meru/g)	BIAS (cm/s^2)	SCALE FACTOR (ppm)
X					
Y					
Z					

IMU COMPENSATION UPDATES

SPACECRAFT (CM or LM)	POSITION	GYRO NBD (meru)	PIPA BIAS (cm/s^2)	TIME OF UPDATE GET		
				h	min	s
	X					
	Y					
	Z					
	X					
	Y					
	Z					
	X					
	Y					
	Z					
	X					
	Y					
	Z					
	X					
	Y					
	Z					

Apollo 15 CM Powered Maneuver Summary

EVENT	TYPICAL G. E. T. (h:min:s)	PROPULSION SYSTEM	BURN DURATION (s)	ULLAGE DURATION (s)	TOTAL ΔV (ft/s)	RESULTANT hp/ha* (nmi)	GUIDANCE MODE	REFSMMAT
Orbit Insertion	00:11:53.9	—	—	—	—	90/90	—	Launch Pad
TEI	2:49:57.55	S-IVB	355.96	—	10,421.1	—	S-IVB/IU	Launch Pad
CSM/LM Ejection	4:16:00	SM-RCS	3	—	1.1	—	EXT ΔV	Launch Pad
S-IVB Evasive Maneuver	4:39:00	S-IVB APS	—	—	9.8	—	S-IVB/IU	Launch Pad
S-IVB LOX Dump	5:00:00	S-IVB LOX	—	—	—	—	S-IVB/IU	Launch Pad
S-IVB Impact Maneuver	6:30:00	S-IVB APS	—	—	—	Lunar Impact	S-IVB/IU	Launch Pad
MCC_1	11:55:54	SPS/RCS	Nom Zero	0	Nom Zero	—	Ext ΔV	PTC
MCC_2	30:56:02.5	SPS/RCS	Nom Zero	0	Nom Zero	—	Ext ΔV	PTC
MCC_3	56:31:14.7	SPS/RCS	Nom Zero	0	Nom Zero	—	Ext ΔV	PTC
MCC_4	73:31:14.7	SPS/RCS	Nom Zero	0	Nom Zero	—	Ext ΔV	PTC
LOI	78:31:14.7	SPS	392.0	0	2,997.9	58.3/170.0	Ext ΔV	Preferred
S-IVB Lunar Impact	79:13:26.0	—	—	—	—	3.65°S/7.58°W	—	—
DOI	82:39:32.5	SPS	22.9	11	207.6	9.6/58.4	Ext ΔV	Landing Site
CSM/LM Undocking and Sep.	100:13:56.0	SM-RCS	3.3	0	1.0	8.4/59.8	Ext ΔV	Landing Site
CSM Circularization	101:34:55.1	SPS	3.9	14	70.8	54.5/64.7	Ext ΔV	Landing Site
CSM Plane Change	165:12:50.6	SPS	15.5	15	308.6	59.2/59.8	Ext ΔV	Preferred
LM Jettison	177:30:27.4	—	—	—	—	—	—	—
CSM/LM Separation	177:35:27.4	SM-RCS	6.4	0	1.0	58.7/59.9	Ext ΔV	Liftoff
TEI	223:43:37.6	SPS	139.0	12	3,036.7	—	Ext ΔV	Preferred
MCC_5	238:43:47.6	SPS/RCS	Nom Zero	0	Nom Zero	—	Ext ΔV	PTC
MCC_6	272:58:20	SPS/RCS	Nom Zero	0	Nom Zero	—	Ext ΔV	PTC
MCC_7	291:58:20	SPS/RCS	Nom Zero	0	Nom Zero	—	Ext ΔV	Entry
Entry	294:58:20	—	—	—	Nom Zero	—	Ext ΔV	Entry

*Above Lunar Landing Site (Lunar Orbit)

Apollo 15 LM Powered Maneuver Summary

EVENT	TYPICAL G. E. T. (h:min:s)	PROPULSION SYSTEM	BURN DURATION (s)	ULLAGE DURATION (s)	TOTAL ΔV (ft/s)	RESULTANT hp/ha* (nmi)	GUIDANCE MODE	REFSMM T
PDI	104:28:54.8	DPS	722.1	7.5	6,697.6	—	PGNS	Landing Site
Touchdown	104:40:57.0							
Ascent	171:37:23.9	APS	435.2	0	6,055.5	9.0/45.6	PGNS	Liftoff
Insertion	171:44:39.1							
Tweak	171:46:39	RCS	Nom Zero	0	Nom Zero	—	PGNS	Liftoff
TPI (Ullage On)	172:29:29.1	APS	12.6	10.5	73.7	43.9/61.5	Lambert	Liftoff
MCC_1	172:44:39.1	RCS	Nom Zero	0	Nom Zero	—	Lambert	Liftoff
MCC_2	172:59:39.1	RCS	Nom Zero	0	Nom Zero	—	Lambert	Liftoff
1st Braking Maneuver	173:10:46.3	RCS	11.2	0	12.3	49.0/60.1	Manual	Liftoff
2nd Braking Maneuver	173:11:59.4	RCS	8.9	0	9.8	53.9/59.7	Manual	Liftoff
3rd Braking Maneuver	173:13:37.8	RCS	4.3	0	4.8	56.6/59.6	Manual	Liftoff
4th Braking Maneuver	173:14:57.4	RCS	4.2	0	4.7	59.1/59.6	Manual	Liftoff
LM Deorbit	179:06:22.7	RCS	82.3	82.3	195.4		PGNS	Liftoff
LM Impact	179:31:07.9	—	—	—	—	—	—	—

*Above Lunar Landing Site

APOLLO 15

EVENT	DATE	TIME (HR:MIN:SEC) G.E.T.	TIME (HR:MIN:SEC) G.E.T.
DAY 1 ACTIVITIES			
LIFTOFF	JULY 26, 1971	8:34: 0.	0: 0: 0.
00? TO P.?	JULY 26, 1971	8:34: 0.	0: 0: 0.
ENABLE TOWER CLEARANCE YAW MANEUVER	JULY 26, 1971	8:34: 1.	0: 0: 1.
TERMINATE YAW MANEUVER	JULY 26, 1971	8:34: 9.	0: 0: 9.
PITCH AND ROLL INITIATION	JULY 26, 1971	8:34:11.	0: 0:11.
S-IC CENTER-ENGINE CUTOFF	JULY 26, 1971	8:34:19.	0: 2:19.
S-IC OUTBOARD-ENGINE CUTOFF	JULY 26, 1971	8:34:39.	0: 2:39.
S-IC/S-II SEPARATION	JULY 26, 1971	8:34:40.	0: 2:40.
S-II IGNITION	JULY 26, 1971	8:34:42.	0: 2:42.
LET JETTISON	JULY 26, 1971	8:37:14.	0: 5:14.
S-II CENTER ENGINE CUTOFF	JULY 26, 1971	8:41:38.	0: 7:38.
S-II OUTBOARD ENGINE CUTOFF	JULY 26, 1971	8:42:13.	0: 8:13.
S-II/S-IVB SEPARATION	JULY 26, 1971	8:42:14.	0: 8:14.
S-IVB IGNITION	JULY 26, 1971	8:42:17.	0: 8:17.
S-IVB FIRST GUIDANCE CUTOFF	JULY 26, 1971	8:45:44.	0:11:44.
PACKING BOOST INSPECTION	JULY 26, 1971	8:45:54.	0:11:54.
PSP IMU REALIGN (OPT 3 : LAUNCH)	JULY 26, 1971	9:19: 0.	0:45: 0.
TLI PAD (LB-11), TLI-90 MIN ABORT PAD (LB-12), LUNAR DAY PAD (LB-14)	JULY 26, 1971	10: 4: 0.	1:30: 0.
T92	JULY 26, 1971	11:14:20.	2:40:20.
S-IVB RETARGETING	JULY 26, 1971	11:23:58.	2:49:58.
S-IVB SECOND GUIDANCE CUTOFF	JULY 26, 1971	11:29:53.	2:55:53.
TLI	JULY 26, 1971	11:30: 3.	2:56: 3.
S-IVB MANEUVER TO SEPARATION ATTITUDE	JULY 26, 1971	11:44:54.	3:10:54.
CSM/S-IVB SEPARATION	JULY 26, 1971	11:56: 0.	3:21: 0.
CSM/LM DOCKING	JULY 26, 1971	12: 6: 0.	3:31: 0.
S-IVB MAN-PROPULSIVE VENT START	JULY 26, 1971	12:29:54.	3:55:54.
S-IVB NON-PROPULSIVE VENT COMPLETE	JULY 26, 1971	12:44:54.	4:10:54.
CSM/LM EJECTION	JULY 26, 1971	12:50: 0.	4:16: 0.
S-IVB YAW MANEUVER	JULY 26, 1971	13: 3: 0.	4:29: 0.
S-IVB APS EVASIVE BURN	JULY 26, 1971	13:13: 0.	4:39: 0.
S-IVB LOX DUMP	JULY 26, 1971	13:34: 0.	5: 0: 0.
P52 IMU REALIGN (OPT 3 : LAUNCH)	JULY 26, 1971	13:50: 0.	5:25: 0.
P52 IMU REALIGN (OPT 1 : PTC)	JULY 26, 1971	14:13: 0.	5:38: 0.
L/A+15 P37 PAD (LB-17)	JULY 26, 1971	14:29: 0.	5:55: 0.
P23 CISLUNAR NAVIGATION	JULY 26, 1971	16:44: 0.	8:10: 0.
MCC-1 P30 MNVR PAD (LB-21)	JULY 26, 1971	19: 4: 0.	10:30: 0.
P52 IMU REALIGN (OPT 3 : PTC)	JULY 26, 1971	19:34: 0.	11: 0: 0.
P30 EXTERNAL DELTA-V (IF MCC-1 REQUIRED)	JULY 26, 1971	19:50: 0.	11:25: 0.
P40/P41 SPS/RCS THRUSTING (IF MCC-1 REQUIRED)	JULY 26, 1971	20:17: 0.	11:43: 0.
MCC-1 (IF REQUIRED)	JULY 26, 1971	20:29:54.	11:55:54.
L/A+25,35,45,60 P37 PADS (LB-23)	JULY 26, 1971	22: 4: 0.	13:30: 0.
DAY 2 ACTIVITIES			
MCC-2 P30 MNVR PAD (LB-24)	JULY 27, 1971	14: 4: 0.	29:30: 0.
P52 IMU REALIGN (OPT 3 : PTC)	JULY 27, 1971	14:34: 0.	30: 0: 0.
P30 EXTERNAL DELTA-V (IF MCC-2 REQUIRED)	JULY 27, 1971	14:50: 0.	30:25: 0.
P40/P41 SPS/RCS THRUSTING (IF MCC-2 REQUIRED)	JULY 27, 1971	15: 7: 0.	30:33: 0.
MCC-2 (IF REQUIRED)	JULY 27, 1971	15:30: 0.	30:56: 0.
LM INGRESS	JULY 27, 1971	18:34: 0.	34: 0: 0.
LM EGRESS	JULY 27, 1971	20:34: 0.	36: 0: 0.
DAY 3 ACTIVITIES			
P52 IMU REALIGN (OPT 3 : PTC)	JULY 28, 1971	15:49: 0.	55:15: 0.
MCC-3 P30 MNVR PAD (LB-26)	JULY 28, 1971	16: 4: 0.	55:30: 0.
P30 EXTERNAL DELTA-V (IF MCC-3 REQUIRED)	JULY 28, 1971	16:34: 0.	56: 0: 0.
MCC-3 REQUIRED)	JULY 28, 1971	16:44: 0.	56:10: 0.
MCC-3 (IF REQUIRED)	JULY 28, 1971	17: 5:14.	56:31:15.
LM INGRESS	JULY 28, 1971	18:34: 0.	58: 0: 0.
LM EGRESS	JULY 28, 1971	20:24: 0.	59:50: 0.

APOLLO 13

EVENT	DATE	TIME (H:MIN:S) G.D.T.	TIME (H:MIN:S) G.E.T.
DAY 4 ACTIVITIES			
MCC-4 P30 MNVR PAD AND PERICYNTHION+2HR ABORT PAD (LB-28)	JULY 29, 1971	8:58: 0.	72:25: 0.
P52 IMU REALIGN (OPT 3 : PTC)	JULY 29, 1971	9:14: 0.	72:42: 0.
P30 EXTERNAL DELTA-V (IF MCC-4 REQUIRED)	JULY 29, 1971	9:34: 0.	73: 0: 0.
P40/P41 SPS/RCS THRUSTING (IF MCC-4 REQUIRED)	JULY 29, 1971	9:44: 0.	73:10: 0.
MCC-4 (IF REQUIRED)	JULY 29, 1971	10: 8:14.	73:31:15.
SIM DOOR JETTISON	JULY 29, 1971	10:35: 0.	74: 1: 0.
LOI MNVR PAD : PRELIMINARY (LB-32)	JULY 29, 1971	11:49: 0.	75:15: 0.
P52 IMU REALIGN (OPT 3 : PTC)	JULY 29, 1971	11:50: 0.	75:16: 0.
P52 IMU REALIGN (OPT 1 : LOI)	JULY 29, 1971	12: 4: 0.	75:30: 0.
TEI 4 PAD (LB-32)	JULY 29, 1971	13:24: 0.	76:50: 0.
LOI MNVR PAD (LB-33)	JULY 29, 1971	14: 4: 0.	77:30: 0.
P30 EXTERNAL DELTA-V	JULY 29, 1971	14:14: 0.	77:40: 0.
P40 SPS THRUSTING	JULY 29, 1971	14:38: 0.	78: 4: 0.
LOI	JULY 29, 1971	15: 8:14.	78:31:15.
S-IVB LUNAR IMPACT (3.65 S, 7.58 W)	JULY 29, 1971	15:49:26.	79:14:27.
P52 IMU REALIGN (OPT 3 : LOI)	JULY 29, 1971	16:34: 0.	80: 0: 0.
P52 IMU REALIGN (OPT 1 : LDG SITE)	JULY 29, 1971	16:39: 0.	80: 5: 0.
DOI MNVR PAD AND TEI 5 PAD (LB-35), P24 PAD (LB-36)	JULY 29, 1971	18:14: 0.	81:40: 0.
P52 IMU REALIGN (OPT 3 : LDG SITE)	JULY 29, 1971	18:34: 0.	82: 0: 0.
P30 EXTERNAL DELTA-V	JULY 29, 1971	18:40: 0.	82: 6: 0.
P40 SPS THRUSTING	JULY 29, 1971	18:42: 0.	82: 8: 0.
DOI	JULY 29, 1971	19:13:32.	82:39:33.
P47 BAILOUT BURN (IF REQ'D)	JULY 29, 1971	20: 0:17.	83:26:17.
P24 LANDMARK TRACKING	JULY 29, 1971	20: 9: 0.	83:35: 0.
P52 IMU REALIGN (OPT 3 : LDG SITE)	JULY 29, 1971	20:24: 0.	83:50: 0.
SIM EXPERIMENT PREPARATION	JULY 29, 1971	20:35: 0.	84: 1: 0.
TEI 12 PAD (LB-38)	JULY 29, 1971	22:14: 0.	85:40: 0.
TEI 13 PAD (LB-38)	JULY 30, 1971	7:50: 0.	95:25: 0.
P52 IMU REALIGN (OPT 3 : LDG SITE , IF DOI TRIM REQUIRED)	JULY 30, 1971	8:10: 0.	95:36: 0.
P52 IMU REALIGN (OPT 1 : DOI TRIM ORIENTATION, IF DOI TRIM REQD)	JULY 30, 1971	8:17: 0.	95:43: 0.
P30 EXTERNAL DELTA-V (IF DOI TRIM REQUIRED)	JULY 30, 1971	8:24: 0.	95:50: 0.
DAY 5 ACTIVITIES			
P40 SPS THRUSTING (IF DOI TRIM REQUIRED)	JULY 30, 1971	8:43: 0.	96: 9: 0.
DOI TRIM (IF REQ'D)	JULY 30, 1971	8:51: 0.	96:17: 0.
P52 IMU REALIGN (OPT : 3 LDG SITE, IF DOI TRIM NOT REQUIRED)	JULY 30, 1971	9:52: 0.	97:18: 0.
P52 IMU REALIGN (OPT 1 : LDG SITE)	JULY 30, 1971	9:59: 0.	97:25: 0.
LM INGRESS	JULY 30, 1971	10:24: 0.	97:50: 0.
LM PGNS TURN-ON	JULY 30, 1971	10:58: 0.	98:25: 0.
UNDOCK/SEPARATION PAD (LB-39), P34 PAD (LB-40)	JULY 30, 1971	11: 4: 0.	98:30: 0.
DOCKED IMU COARSE ALIGN	JULY 30, 1971	11:24: 0.	98:50: 0.
P52 (LM) IMU REALIGN (OPT 3 : LDG SITE) (CURSOR/SPIRAL TECHNIQUE)	JULY 30, 1971	11:34: 0.	99: 0: 0.
P30 EXTERNAL DELTA-V (CSM)	JULY 30, 1971	12:27: 0.	99:53: 0.
P41 RCS THRUSTING (CSM)	JULY 30, 1971	12:42: 0.	100: 8: 0.
P47 THRUST MONITOR (LM)	JULY 30, 1971	12:44: 0.	100:12: 0.
CSM/LM UNDOCKING AND SEPARATION	JULY 30, 1971	12:47:56.	100:13:56.
P24 LANDMARK TRACKING	JULY 30, 1971	13:15: 0.	100:41: 0.
P52 (CSM) IMU REALIGN (OPT 3 : LDG SITE)	JULY 30, 1971	13:28: 0.	100:54: 0.
DOI-2 ABORT PAD (LB-46), CSM CIRC P76 PAD (LB-47), CSM CIRC PAD (LB-48)	JULY 30, 1971	13:29: 0.	100:55: 0.
P52 (LM) IMU REALIGN (OPT 3 : LDG SITE)	JULY 30, 1971	13:34: 0.	101: 0: 0.
P30 EXTERNAL DELTA-V (CSM)	JULY 30, 1971	13:37: 0.	101: 3: 0.
P40 SPS THRUSTING (CSM)	JULY 30, 1971	13:40: 0.	101: 6: 0.
LPO Calibration	JULY 30, 1971	13:46: 0.	101:12: 0.

APOLLO 15

EVENT	DATE	TIME (D:H:M:S) G.M.T.	TIME (D:H:M:S) G.E.T.
DAY 5 ACTIVITIES CONTD			
CSM CIRCULARIZATION	JULY 30, 1971	14: 8:55.	101:34:55.
P24 PAD (LB-53)	JULY 30, 1971	14:44: 0.	102:10: 0.
N9 PDI-12 PAD (LS-50), P63 PAD(LS-51), PDI ABORT (EARLY/LATE), T2 ASPRT PAD, T3 TIG (LB-52)	JULY 30, 1971	14:54: 0.	102:20: 0.
P24 LANDMARK TRACKING	JULY 30, 1971	15: 8: 0.	102:34: 0.
P52 (LM) IMU REALIGN (OPT 3 : LOS SITE)	JULY 30, 1971	15:24: 0.	102:50: 0.
P52 (CM) IMU REALIGN (OPT 3 : LOS SITE)	JULY 30, 1971	15:29: 0.	102:55: 0.
P52 (CM) OPAS CALIBRATION	JULY 30, 1971	15:34: 0.	103: 2: 0.
OPAS CALIBRATION (LM)	JULY 30, 1971	15:39: 0.	103: 5: 0.
P63 IGNITION ALGORITHM TEST	JULY 30, 1971	16: 1: 0.	103:27: 0.
P30 EXTERNAL DELTA-V (LM ;NO PDI-12 ABORT)	JULY 30, 1971	16: 8: 0.	103:34: 0.
PDI	JULY 30, 1971	17: 2:55.	104:28:55.
LM LUNAR TOUCHDOWN	JULY 30, 1971	17:14:57.	104:40:57.
P57 LUNAR SURFACE ALIGN (OPT 3 : LOS SITE, TECH 1 : G & Z AXIS)	JULY 30, 1971	17:34: 0.	105: 0: 0.
P52 (CM) IMU REALIGN (OPT 3 : LOS SITE)	JULY 30, 1971	17:35: 0.	105: 1: 0.
P24 PAD (LB-52)	JULY 30, 1971	17:44: 0.	105:10: 0.
P57 LUNAR SURFACE ALIGN (OPT 3 : LOS SITE, TECH 2 : TAS STARS)	JULY 30, 1971	17:49: 0.	105:15: 0.
P57 LUNAR SURFACE ALIGN (OPT 3 : LOS SITE, TECH 2 : TAS STARS)	JULY 30, 1971	17:54: 0.	105:22: 0.
LM PGNS POWER DOWN	JULY 30, 1971	18:14: 0.	105:40: 0.
START EVA	JULY 30, 1971	18:44: 0.	106:10: 0.
P24 LANDMARK TRACKING	JULY 30, 1971	19: 4: 0.	106:30: 0.
END EVA	JULY 30, 1971	19:14: 0.	106:40: 0.
TEI 26 PAD (LB-104)	JULY 30, 1971	21:29: 0.	108:55: 0.
P52 (CM) IMU REALIGN (OPT 3 : LOS SITE)	JULY 30, 1971	21:34: 0.	109: 0: 0.
P52 (CM) IMU REALIGN (OPT 3 : LOS SITE)	JULY 31, 1971	7:34: 0.	119: 21 0.
START EVA-1	JULY 31, 1971	8:24: 0.	119:50: 0.
DAY 6 ACTIVITIES			
P52 (CM) IMU REALIGN (OPT 3 : LOS SITE)	JULY 31, 1971	15: 7: 0.	126:33: 0.
TEI 37 PAD (LB-106)	JULY 31, 1971	15:19: 0.	126:45: 0.
END EVA-1	JULY 31, 1971	15:24: 0.	126:50: 0.
P52 (CM) IMU REALIGN (OPT 3 : LOS SITE)	JULY 31, 1971	19: 7: 0.	130:33: 0.
P52 (CM) IMU REALIGN (OPT 3 : LOS SITE)	AUGUST 1, 1971	5:19: 0.	140:45: 0.
START EVA-2	AUGUST 1, 1971	5:44: 0.	141:10: 0.
DAY 7 ACTIVITIES			
END EVA-2	AUGUST 1, 197	12:44: 0.	148:10: 0.
P52 (CM) IMU REALIGN (OPT 3 : LOS SITE)	AUGUST 1, 1971	12:51: 0.	148:17: 0.
TEI 45 PAD (LB-105)	AUGUST 1, 1971	14:54: 0.	150:20: 0.
P52 (CM) IMU REALIGN (OPT 3 : LOS SITE)	AUGUST 1, 1971	17: 9: 0.	152:35: 0.
START EVA-3	AUGUST 2, 1971	2:24: 0.	161:50: 0.
P52 (CM) IMU REALIGN (OPT 3 : LOS SITE)	AUGUST 2, 1971	2:44: 0.	162:10: 0.
LRRC MOVE BAR AND TEI 52 PAD (LB-106)	AUGUST 2, 1971	4: 9: 0.	163:35: 0.
P52 (CM) IMU REALIGN (OPT 3 : LOS SITE)	AUGUST 2, 1971	4:49: 0.	164:15: 0.
P52 (CM) IMU REALIGN (OPT : : PLANE CHG)	AUGUST 2, 1971	4:54: 0.	164:20: 0.
P30 EXTERNAL DELTA-V	AUGUST 2, 1971	5: 4: 0.	164:30: 0.
P40 SPS THRUSTING	AUGUST 2, 1971	5:34: 0.	165: 0: 0.
CSM LUNAR ORBIT PLANE CHANGE	AUGUST 2, 1971	5:44:50.	165:12:51.
P52 (CM) IMU REALIGN (OPT 1 : LIFT OFF)	AUGUST 2, 1971	7: 4: 0.	166:30: 0.
END EVA-3	AUGUST 2, 1971	8:24: 0.	167:50: 0.
DAY 8 ACTIVITIES			
LM PGNS TURN ON (OFF TIME APPROX. 42 HOURS)	AUGUST 2, 1971	9:14: 0.	168:42: 0.
P57 LUNAR SURFACE ALIGN (OPT 4 : LIFT OFF, TECH 3 : G & 1 STAR)	AUGUST 2, 1971	9:24: 0.	168:50: 0.
P24 PAD (LB-109)	AUGUST 2, 1971	9:44: 0.	169:10: 0.
P22 LUNAR SURFACE NAVIGATION	AUGUST 2, 1971	10: 4: 0.	169:32: 0.
P24 LANDMARK TRACKING			

APOLLO 15

EVENT	DATE	TIME (H:MIN:S) G.M.T.	TIME (H:MIN:S) G.E.T.
DAY 8 ACTIVITIES CONTD			
ASCENT PAD (LS-112), CSI PAD (LS-113)	AUGUST 2, 1971	10:20: 0.	169:55: 0.
P52 (CM) IMU REALIGN (OPT 3 : LIFT OFF)	AUGUST 2, 1971	10:34: 0.	170: 0: 0.
P52 (CM) GRAS CALIBRATION	AUGUST 2, 1971	10:40: 0.	170: 6: 0.
P57 LUNAR SURFACE ALIGN (OPT 4 : LIFT OFF, TECH 3 : 3 & 1 STAR)	AUGUST 2, 1971	11:28: 0.	170:52: 0.
P12 POWERED ASCENT	AUGUST 2, 1971	11:39: 0.	171: 5: 0.
LM LUNAR LIFT OFF	AUGUST 2, 1971	12:11:24.	171:37:24.
LUNAR ORBIT INSERTION	AUGUST 2, 1971	12:18:39.	171:44:39.
TWEAK BURN (LM : IF REQ'D)	AUGUST 2, 1971	12:20:39.	171:46:39.
P20 RENDEZVOUS NAVIGATION (LM)	AUGUST 2, 1971	12:21:30.	171:47:30.
P34 TPI TARGETING (LM)	AUGUST 2, 1971	12:22:30.	171:48:30.
BAILOUT BURN (LM : IF REQ'D)	AUGUST 2, 1971	12:23:39.	171:49:39.
P34 TPI TARGETING (CSM)	AUGUST 2, 1971	12:25: 0.	171:51: 0.
P40 SPS THRUSTING (CSM)	AUGUST 2, 1971	12:55: 0.	172:21: 0.
P42 APS THRUSTING	AUGUST 2, 1971	13: 0: 0.	172:26: 0.
TPI (ULLAGE ON)	AUGUST 2, 1971	13: 3:29.	172:29:29.
TPI (APS IGNITION)	AUGUST 2, 1971	13: 3:39.	172:29:39.
P76 TARGET DELTA-V (CSM)	AUGUST 2, 1971	13: 4: 0.	172:30: 0.
P38 TPM TARGETING (LM)			
P35 TPM TARGETING (CSM)	AUGUST 2, 1971	13: 5: 0.	172:31: 0.
P41 RCS THRUSTING (CSM)	AUGUST 2, 1971	13:14:30.	172:42:30.
P41 RCS THRUSTING (LM)	AUGUST 2, 1971	13:17: 0.	172:43: 0.
MCC-1 (LM : IF REQ'D)	AUGUST 2, 1971	13:18:39.	172:44:39.
P76 TARGET DELTA-V (CSM : IF MCC-1 PERFORMED)	AUGUST 2, 1971	13:19: 0.	172:45: 0.
P38 TPM TARGETING (LM)	AUGUST 2, 1971	13:20: 0.	172:46: 0.
P35 TPM TARGETING (CSM)			
P41 RCS THRUSTING (LM)	AUGUST 2, 1971	13:32: 0.	172:58: 0.
P41 RCS THRUSTING (CSM)			
MCC-2 (LM : IF REQ'D)	AUGUST 2, 1971	13:33:39.	172:59:39.
P76 TARGET DELTA-V (CSM : IF MCC-2 PERFORMED)	AUGUST 2, 1971	13:34: 0.	173: 0: 0.
P79 RENDEZVOUS FINAL PROGRAM (CSM)	AUGUST 2, 1971	13:35: 0.	173: 1: 0.
P47 THRUST MONITOR (LM)	AUGUST 2, 1971	13:41:30.	173: 7:30.
FIRST LM BRAKING MANEUVER	AUGUST 2, 1971	13:44:46.	173:10:46.
SECOND LM BRAKING MANEUVER	AUGUST 2, 1971	13:45:59.	173:11:59.
THIRD LM BRAKING MANEUVER	AUGUST 2, 1971	13:47:38.	173:13:38.
FOURTH LM BRAKING MANEUVER	AUGUST 2, 1971	13:48:57.	173:14:57.
P47 THRUST MONITOR (CSM)	AUGUST 2, 1971	14: 0: 0.	173:26: 0.
DOCKING	AUGUST 2, 1971	14: 4: 0.	173:30: 0.
LM DESCENT BURN PAD (LS-127)	AUGUST 2, 1971	14: 9: 0.	173:35: 0.
P52 (CM) IMU REALIGN (OPT 3 : LIFT OFF)	AUGUST 2, 1971	15: 4: 0.	174:30: 0.
LM JETTISON PAD (LS-127), CSM-SEP PAD (LS-128)	AUGUST 2, 1971	16:14: 0.	175:40: 0.
P30 EXTERNAL DELTA-V (CSM)	AUGUST 2, 1971	17:36: 0.	177: 1: 0.
LM JETTISON	AUGUST 2, 1971	18: 4:27.	177:30:27.
P41 RCS THRUSTING	AUGUST 2, 1971	18: 7: 0.	177:33: 0.
CSM SEPARATION BURN	AUGUST 2, 1971	18: 9:27.	177:35:27.
LM DESCENT BURN	AUGUST 2, 1971	19:40:23.	179: 6:23.
LM IMPACT (1.67 E, 26.25 N)	AUGUST 2, 1971	20: 5: 8.	179:31: 8.
TPI 58 PAD (LS-132)	AUGUST 2, 1971	20: 9: 0.	179:35: 0.
TPI 60 PAD (LS-132)	AUGUST 3, 1971	5:44: 0.	189:10: 0.
P52 IMU REALIGN (OPT 3 : LIFT OFF)	AUGUST 3, 1971	6:51: 0.	190:17: 0.
DAY 9 ACTIVITIES			
TPI 62 PAD (LS-133)	AUGUST 3, 1971	10:14: 0.	193:40: 0.
TPI 64 PAD (LS-133)	AUGUST 3, 1971	13:14: 0.	196:40: 0.
P52 IMU REALIGN (OPT 3 : LIFT OFF)	AUGUST 3, 1971	14:14: 0.	197:40: 0.
P52 IMU REALIGN (OPT 3 : LIFT OFF)	AUGUST 3, 1971	18:24: 0.	201:50: 0.
TPI 66 PAD (LS-134)	AUGUST 3, 1971	19:54: 0.	203:20: 0.
P52 IMU REALIGN (OPT 3 : LIFT OFF)	AUGUST 4, 1971	4:24: 0.	211:50: 0.
TPI 71 PAD (LS-134)	AUGUST 4, 1971	6: 4: 0.	213:30: 0.

APOLLO 15

EVENT	DATE	TIME (H:MIN:S) G.E.T.	TIME (H:MIN:S) G.E.T.
DAY 10 ACTIVITIES			
TEI 73 PAD (LS-135)	AUGUST 4, 1971	9:59: 0.	217:25: 0.
P52 IMU REALIGN (OPT 3 : LIFT OFF)	AUGUST 4, 1971	10:24: 0.	217:50: 0.
TEI 74 PAD (PRELIMINARY (LS-135)	AUGUST 4, 1971	13:49: 0.	221:15: 0.
P52 IMU REALIGN (OPT 3 : LIFT OFF)	AUGUST 4, 1971	14:16: 0.	221:42: 0.
P52 IMU REALIGN (OPT 1 : TEI)	AUGUST 4, 1971	14:22: 0.	221:48: 0.
TEI 74 PAD : NOMINAL AND TEI 75 PAD (LS-136)	AUGUST 4, 1971	15: 4: 0.	222:30: 0.
SUBSAT LAUNCH	AUGUST 4, 1971	15:10:13.	222:36:13.
P30 EXTERNAL DELTA-V	AUGUST 4, 1971	15:22: 0.	222:48: 0.
P40 SPS THRUSTING	AUGUST 4, 1971	15:57: 0.	223:23: 0.
TEI	AUGUST 4, 1971	16:17:48.	223:43:48.
P52 IMU REALIGN (OPT 3 : TEI)	AUGUST 4, 1971	18:34: 0.	226: 0: 0.
P52 IMU REALIGN (OPT 1 : PTC)	AUGUST 4, 1971	18:42: 0.	226: 8: 0.
P52 IMU REALIGN (OPT 3 : PTC)	AUGUST 5, 1971	5:48: 0.	237:14: 0.
MCC-5 MNVR PAD (LS-138)	AUGUST 5, 1971	6: 4: 0.	237:30: 0.
P23 CISLUNAR NAVIGATION			
P30 EXTERNAL DELTA-V (IF MCC-5 REQUIRED)	AUGUST 5, 1971	6:51: 0.	238:17: 0.
P40/P41 SPS/RCS THRUSTING (IF MCC-5 REQUIRED)	AUGUST 5, 1971	6:59: 0.	238:25: 0.
MCC-5 (IF REQ'D)	AUGUST 5, 1971	7:17:48.	238:43:48.
DAY 11 ACTIVITIES			
START CSM EVA	AUGUST 5, 1971	10:36: 0.	242: 0: 0.
END CSM EVA	AUGUST 5, 1971	11:19: 0.	242:45: 0.
P52 IMU REALIGN (OPT 3 : PTC)	AUGUST 5, 1971	19:19: 0.	250:45: 0.
P23 CISLUNAR NAVIGATION	AUGUST 5, 1971	19:44: 0.	251:10: 0.
P52 IMU REALIGN (OPT 3 : PTC)	AUGUST 6, 1971	7:24: 0.	262:50: 0.
P23 CISLUNAR NAVIGATION	AUGUST 6, 1971	7:49: 0.	263:15: 0.
DAY 12 ACTIVITIES			
P52 IMU REALIGN (OPT 3 : PTC)	AUGUST 6, 1971	12:14: 0.	267:40: 0.
P23 CISLUNAR NAVIGATION	AUGUST 6, 1971	12:24: 0.	267:50: 0.
MCC-6 MNVR PAD (LS-147), ENTRY PAD ASSUMING MCC-6 (LS-148)	AUGUST 6, 1971	16:24: 0.	271:50: 0.
P52 IMU REALIGN (OPT 3 : PTC)	AUGUST 6, 1971	16:34: 0.	272: 0: 0.
P30 EXTERNAL DELTA-V (IF MCC-6 REQUIRED)	AUGUST 6, 1971	16:56: 0.	272:22: 0.
P40/P41 SPS/RCS THRUSTING (IF MCC-6 REQUIRED)	AUGUST 6, 1971	17: 9: 0.	272:35: 0.
MCC-6 (IF REQ'D)	AUGUST 6, 1971	17:32:20.	272:58:20.
P23 CISLUNAR NAVIGATION	AUGUST 6, 1971	17:44: 0.	273:10: 0.
P23 CISLUNAR NAVIGATION	AUGUST 6, 1971	20:34: 0.	276: 0: 0.
DAY 13 ACTIVITIES			
P52 IMU REALIGN (OPT 3 : PTC)	AUGUST 7, 1971	9:37: 0.	289: 3: 0.
P23 CISLUNAR NAVIGATION	AUGUST 7, 1971	10:36: 0.	290: 0: 0.
MCC-7 MNVR PAD (LS-156), ENTRY PAD ASSUMING MCC-7 (LS-157)	AUGUST 7, 1971	11:24: 0.	290:50: 0.
P52 IMU REALIGN (OPT 3 : PTC)	AUGUST 7, 1971	11:34: 0.	291: 0: 0.
P52 IMU REALIGN (OPT 1 : ENTRY)	AUGUST 7, 1971	11:43: 0.	291: 9: 0.
P30 EXTERNAL DELTA-V (IF MCC-7 REQUIRED)	AUGUST 7, 1971	11:54: 0.	291:22: 0.
P40/P41 SPS/RCS THRUSTING (IF MCC-7 REQUIRED)	AUGUST 7, 1971	12:11: 0.	291:37: 0.
MCC-7 (IF REQ'D)	AUGUST 7, 1971	12:32:20.	291:58:20.
P23 CISLUNAR NAVIGATION	AUGUST 7, 1971	12:39: 0.	292: 5: 0.
ENTRY PAD (LS-173)	AUGUST 7, 1971	14:34: 0.	294: 0: 0.
P61 ENTRY PREPARATION	AUGUST 7, 1971	15:19: 0.	294:39: 0.
P62 ENTRY-CM/SM SEPARATION AND PREENTRY MANEUVER	AUGUST 7, 1971	15:15: 0.	294:41: 0.
CM/SM SEPARATION	AUGUST 7, 1971	15:29: 0.	294:48: 0.
ENTRY INTERFACE	AUGUST 7, 1971	15:32:20.	294:58:20.
SPLASHDOWN	AUGUST 7, 1971	15:45:46.	295:11:46.

P47 - THRUST MONITOR

TLI

V37 Enter, 47 Enter
V16 N83 Flashing, ΔV XYZ Body Axes
N62 Enter
V16 N62 Flashing, Inertial Velocity, Altitude Rate, Altitude

X						TB 6p* (h:min:s)		X					
X	X	X				R	Predicted Spacecraft IMU Gimbal Angles at TLI Ignition (degrees)	X	X	X			
X	X	X				P		X	X	X			
X	X	X				Y		X	X	X			
X	X	X				BT	Duration of TLI (min:s)	X	X	X			
						ΔVC** (ft/s)							
+						VI† (ft/s)		+					
X	X	X				R SEP	Predicted S/C IMU Gimbal Angles at Completion of S-IVB Maneuver to CSM/SIV-B Separation Attitude (degrees)	X	X	X			
X	X	X				P SEP		X	X	X			
X	X	X				Y SEP		X	X	X			
X	X	X				R	Predicted S/C IMU Gimbal Angles at Extraction	X	X	X			
X	X	X				P		X	X	X			
X	X	X				Y		X	X	X			
						X	N83						
						Y	ΔV ft/s						
						Z							
						V ft/s	N62						
						HDOT ft/s							
						H nmi							

*Predicted Time of Beginning of S-IVB Restart Preparation for TLI (TB6 = TLI Ignition - 9 minutes)
**Nominal TLI ΔV Set into EMS ΔV Control
†Nominal Inertial Velocity Displayed on DSKY at TLI Cutoff

P30–EXTERNAL ΔV

TLI + 90

V37 Enter. 30 Enter

V06 N33 Flashing, Load Desired GETI

V06 N81 Flashing, Load Desired ΔV

						Purpose							
						Prop/Guidance							
+						Weight (lb)	N47	+					
	0	0				PTrim	N48		0	0			
	0	0				YTrim (degrees)			0	0			
+	0	0				Hours	N33	+	0	0			
+	0	0	0			Minutes GETI		+	0	0	0		
+	0					Seconds		+	0				
						ΔV_X	N81						
						ΔV_Y LV							
						ΔV_Z lfl/s)							
X	X	X				R		X	X	X			
X	X	X				P IMU Gimbal Angles (deg)		X	X	X			
X	X	X				Y		X	X	X			
+						H_{Apogee}	N44	+					
						$H_{Perigee}$ nmi							
+						ΔVT (ft/s)		+					
X	X	X				BT (min:s)		X	X	X			
X						ΔVC (ft/s)		X					
X	X	X	X			SXTStar		X	X	X	X		
+					0	SFT (degrees)		+					0
+				0	0	TRN (degrees)		+				0	0
X	X	X				BSS (Coas Star)		X	X	X			
X	X					SPA (Coas Pitch, deg)		X	X				
X	X	X				SXP (Coas X Pos, deg)		X	X	X			
	0					LAT	N61		0				
						LONG (degrees)							
+						RTGO (nmi) EMS		+					
+						VIO (ft/s)		+					
						GET 0.05 g Hr:min:s							
						SET STARS							
X	X	X				R_{Align}		X	X	X			
X	X	X				P_{Align}		X	X	X			
X	X	X				Y_{Align}		X	X	X			
						ULLAGE							

NOTES:

PRO/GUID		PROPULSION SYSTEM (SPS/RCS)/ GUIDANCE (SCS/G&N)
WT	XXXXX (lbs)	PREMANEUVER VEHICLE WEIGHT
P TRIM	X.XX (DEG)	SPS PITCH GIMBAL OFFSET TO PLACE THRUST
Y TRIM	X.XX (DEG)	SPS YAW GIMBAL OFFSET TO PLACE THRUST
GETI	XX:XX:XX (HRS:MIN:SEC)	TIME OF MNVR IGNITION
ΔVX ΔVY ΔVZ	XXXX.X (fps) XXXX.X (fps) XXXX.X (fps)	P30 VELOCITY TO BE GAINED COMPONENTS IN LOCAL VERTICAL COORDINATES
R P Y	XXX (DEG) XXX (DEG) XXX (DEG)	IMU GIMBAL ANGLES OF MANEUVER ATTITUDE
H_A	XXXX.X (nm)	PREDICTED APOGEE ALTITUDE AFTER MANEUVER
H_P	XXXX.X (nm)	PREDICTED PERIGEE ALTITUDE AFTER MANEUVER
ΔVT	XXXX.X	TOTAL VELOCITY OF MANEUVER
BT	X:XX (MIN:SEC)	MANEUVER DURATION
ΔVC	XXXX.X (fps)	PREMANEUVER ΔV SETTING IN EMS ΔV COUNTER
SXTS	XX (OCTAL)	SEXTANT STAR FOR MANEUVER ATTITUDE CK
SFT	XXX.X (DEG)	SEXTANT SHAFT SETTING FOR MANEUVER ATTITUDE CK
TRN	XX.X (DEG)	SEXTANT TRUNNION SETTING FOR MANEUVER ATTITUDE CK
BSS	XXX (OCTAL)	BORESIGHT STAR FOR MANEUVER ATTITUDE CK USING THE COAS
SPA	XX.X (DEG)	BSS PITCH ANGLE ON COAS
SXP	X.X (DEG)	BSS X POSITION ON COAS
LAT LONG	XX.XX XXX.XX	LATITUDE AND LONGITUDE OF THE LANDING POINT FOR ENTRY GUIDANCE
RTGO	XXXX.X	RANGE TO GO FOR EMS INITIALIZATION
VIO	XXXXXX (fps)	INERTIAL VELOCITY AT .05G FOR EMS INITIALIZATION
GET(.05G)	XX:XX:XX	TIME OF .05G
SET STARS		STARS FOR TELESCOPE FOR BACKUP GDC ALIGN
R, P, Y (ALIGN)		ATTITUDE TO BE SET IN ATTITUDE SET TW FOR BACKUP GDC ALIGN
ULLAGE		NO. OF SM RCS JETS USED AND LENGTH OF TIME OF USSAGE
HORIZON WINDOW		WINDOW MARKING AT WHICH HORIZON IS PLACED AT A SPECIFIED TIG (ATT CK)

P37 – RETURN TO EARTH

V37 Enter, 37 Enter

V06 N33 Flashing

Time of Ignition (h, min, 0.01 s)

V06 N60 Flashing

Blank, ΔV Desired, GAMMA E1 Desired (ft/s, 0.01 deg)

V06 N61 Flashing

Impact Latitude and Longitude (0.01 deg, 0.01 deg)

V06 N39 Flashing

ΔT of Transfer (h, min, 0.01 s)

V06 N60 Flashing

Blank, V Predicted GAMMA E1 (ft/s, 0.01 deg)

V06 N81 Flashing

ΔVX (LV), ΔVY (LV), ΔVZ (LV) at TIG (0.1 ft/s)

V04 N06 Flashing

R1: 00007

R2: 0000X (1– SPS, 2–RCS)

V06 N33 Flashing

Time of Ignition (h, min, 0.01 s)

V16 N45 Flashing

Marks, TFI, Middle Gimbal Angle (marks, min/s, 0.01 deg)

L/O +8

		●		Time of Ignition (h, min)	N33				●		
⊠				ΔV Required (ft/s)	N60	⊠					
⊠				Longitude of Splash Point (deg)		⊠					
		●		Time of Entry Interface (h, min)					●		

		●		Time of Ignition (h, min)	N33				●		
⊠				ΔV Required (ft/s)	N60	⊠					
⊠				Longitude of Splash Point (deg)		⊠					
		●		Time of Entry Interface (h, min)					●		

P47–THRUST MONITOR

TLI

V37 Enter, 47 Enter
V16 N83 Flashing, ΔV XYZ Body Axes
N62 Enter
V16 N62 Flashing, Inertial Velocity, Altitude Rate, Altitude

X						TB 6p* (h:min:s)		X					
X	X	X				R	Predicted Spacecraft IMU Gimbal Angles at TLI Ignition (degrees)	X	X	X			
X	X	X				P		X	X	X			
X	X	X				Y		X	X	X			
X	X	X				BT	Duration of TLI (min:s)	X	X	X			
						ΔVC** (ft/s)							
+						VI† (ft/s)		+					
X	X	X				R SEP	Predicted S/C IMU Gimbal Angles at Completion of S-IVB Maneuver to CSM/SIV-B Separation Attitude (degrees)	X	X	X			
X	X	X				P SEP		X	X	X			
X	X	X				Y SEP		X	X	X			
X	X	X				R	Predicted S/C IMU Gimbal Angles at Extraction	X	X	X			
X	X	X				P		X	X	X			
X	X	X				Y		X	X	X			
						X	N83						
						Y	ΔV ft/s						
						Z							
						V ft/s	N62						
						HDOT ft/s							
						H nmi							

*Predicted Time of Beginning of S-IVB Restart Preparation for TLI (T86 = TLI Ignition - 9 minutes)
**Nominal TLI ΔV Set into EMS ΔV Control
†Nominal Inertial Velocity Displayed on DSKY at TLI Cutoff

P47–THRUST MONITOR

V37 Enter, 47 Enter CSM/LM Ejection

V16 N83 Flashing, ΔV XYZ Body Axes

N62 Enter

V16 N62 Flashing, Inertial Velocity, Altitude Rate, Altitude

X	X	X				R			X	X	X			
X	X	X				P	IMU Gimbal Angles (degrees)		X	X	X			
X	X	X				Y			X	X	X			
X	X	X				BT (min:s)			X	X	X			
						VI (ft/s)								
						X		N83						
						Y	ΔV ft/s							
						Z								
						V ft/s		N62						
						HDOT ft/s								
						H nmi								

NOTES:

P37 – RETURN TO EARTH

V37 Enter, 37 Enter

V06 N33 Flashing

Time of Ignition (h, min, 0.01 s)

V06 N60 Flashing

Blank, ΔV Desired, GAMMA EI Desired (ft/s, 0.01 deg)

V06 N61 Flashing

Impact Latitude and Longitude (0.01 deg, 0.01 deg)

V06 N39 Flashing

ΔT of Transfer (h, min, 0.01 s)

V06 N60 Flashing

Blank, V Predicted GAMMA EI (ft/s, 0.01 deg)

V06 N81 Flashing

ΔVX (LV), ΔVY (LV), ΔVZ (LV) at TIG (0.1 ft/s)

V04 N06 Flashing

R1: 0 0 0 0 7

R2: 0 0 0 0 X (1–SPS, 2–RCS)

V06 N33 Flashing

Time of Ignition (h, min, 0.01 s)

V16 N45 Flashing

Marks, TFI, Middle Gimbal Angle (marks, min/s, 0.01 deg)

L/O +15

					Time of Ignition (h, min)	N33					
					ΔV Required (ft/s)	N60					
					Longitude of Splash Point (deg)						
					Time of Entry Interface (h, min)						

					Time of Ignition (h, min)	N33					
					ΔV Required (ft/s)	N60					
					Longitude of Splash Point (deg)						
					Time of Entry Interface (h, min)						

P23–CISLUNAR MIDCOURSE NAVIGATION

V37 Enter, 23 Enter
V05 N70 Flashing

R1:	0 0 0 X X	Celestial Body Code
R2:	0 0 X 0 0	0 – Horizon 1 – Earth Landmark 2 – Moon Landmark
R3:	0 0 C D 0	C = 0, D = 0 Landmark C-1 Earth Horizon C-2 Moon Horizon D-1 Near Horizon D-2 Far Horizon

V59 Flashing, Perform Optics Calibration
V51 Flashing - Please Mark

OPTICS CALIBRATION

+	0	0				Hours		+	0	0			
+	0	0	0			Minutes GET		+	0	0	0		
+	0			•		Seconds		+	0			•	
X	0	0	0			Star ID	N70	X	0	0	0		
+			•			Trun Angle Bias	N87 R2	+					
+						Trun Angl Bias	N87 R2	-					
+						Trun Angle Bies	N87 R2	-					

MIDCOURSE NAVIGATION

+	0	0				Hours		+	0	0			
+	0	0	0			Minutes GET		•	0	0	0		
+	0					Seconds		+	0				
X	0	0	0			Star ID	N70	X	0	0	0		
X	0	0		0	0	LMK ID		X	0	0		0	0
X	0	0			0	Hor ID		X	0	0			0
						ΔR nmi	N49						
						ΔV ft/s							
						ΔR nmi	N49						
						ΔV ft/s							
						ΔR nmi	N49						
						ΔV ft/s							
						ΔR nmi	N49						
						ΔV ft/s							
						ΔR nmi	N49						
						ΔV ft/s							

NOTES:

P23 – ASTRONAUT LOCATOR CALIBRATION

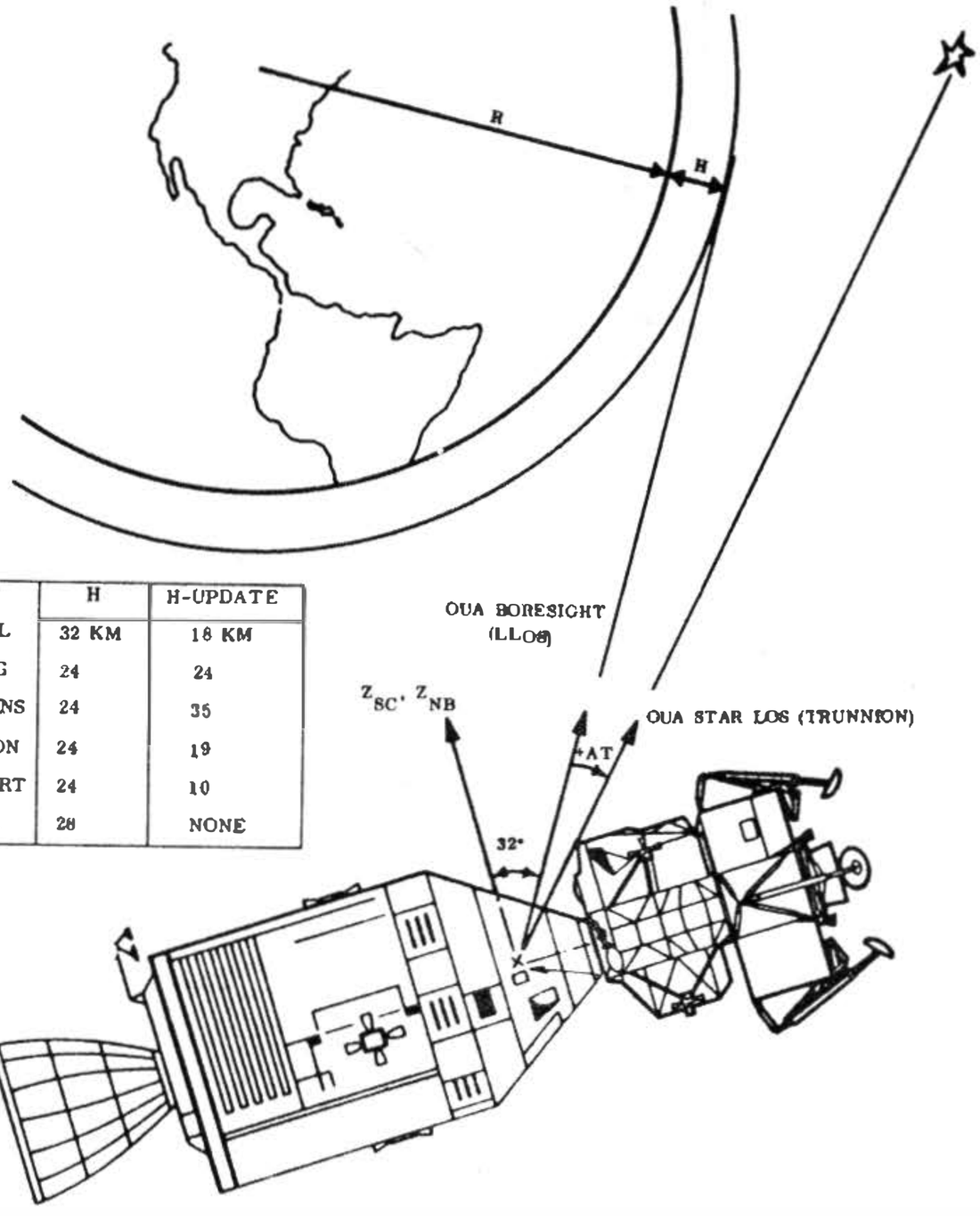

	H	H-UPDATE
APOLLO 8 LOVELL	32 KM	18 KM
APOLLO 10 YOUNG	24	24
APOLLO 11 COLLINS	24	35
APOLLO 12 GORDON	24	19
APOLLO 13 SWIGERT	24	10
APOLLO 14 ROOSA	28	NONE

P23 - CISLUNAR MIDCOURSE NAVIGATION

V37 Enter, 23 Enter
V05 N70 Flashing

R1: 0 0 0 X X Celestial Body Code
R2: 0 0 X 0 0 0 – Horizon 1 – Earth Landmark 2 – Moon Landmark
R3: 0 0 C D 0 C = 0, D = 0 Landmark C-1 Earth Horizon C-2 Moon Horizon D-1 Near Horizon D-2 Far Horizon

V59 Flashing, Perform Optics Calibration
V51 Flashing - Please Mark

OPTICS CALIBRATION

+	0	0				Hours			+	0	0			
+	0	0	0			Minutes GET			+	0	0	0		
+	0					Seconds			+	0				
X	0	0	0			Star ID	N70		X	0	0	0		
+						Trun Angle Bias	N87 R2		+					
+						Trun Angle Bias	N87 R2		+					
+						Trun Ang Bias	N87 R2		+					

MIDCOURSE NAVIGATION

+	0	0				Hours			+	0	0			
+	0	0	0			Minutes GET			+	0	0	0		
+	0					Seconds			+	0				
X	0	0	0			Star ID	N70		X	0	0	0		
X	0	0		0	0	LMK ID			X	0	0		0	0
X	0	0			0	Hor ID			X	0	0			0
						ΔR nmi	N49							
						ΔV ft/s								
						ΔR nmi	N49							
						ΔV ft/s								
						ΔR nmi	N49							
						ΔV ft/s								
						ΔR nmi	N49							
						ΔV ft/s								
						ΔR nmi	N49							
						ΔV ft/s								
						ΔR nmi	N49							
						ΔV ft/s								

NOTES:

P30--EXTERNAL ΔV

MCC 1

V37 Enter, 30 Enter

V06 N33 Flashing, Load Desired GETI

V06 N81 Flashing, Load Desired ΔV

						Purpose							
						Prop/Guidance							
+						Weight (lb)	N47	+					
	0	0				P_{Trim}	N48		0	0			
	0	0				Y_{Trim} (degrees)			0	0			
+	0	0				Hours	N33	+	0	0			
+	0	0	0			Minutes GETI		+	0	0	0		
+	0					Seconds		+	0				
						ΔV_X	N81						
						ΔV_Y LV							
						ΔV_Z (ft/s)							
X	X	X				R		X	X	X			
X	X	X				P IMU Gimbal Angles (deg)		X	X	X			
X	X	X				Y		X	X	X			
+						H_{Apogee}	N44	+					
						$H_{perigee}$ nmi							
+						ΔVT (ft/s)		+					
X	X	X				BT (min:s)		X	X	X			
X						ΔVC (ft/s)		X					
X	X	X	X			SXT Star		X	X	X	X		
+					0	SFT (degrees)		+					0
+				0	0	TRN (degrees)		+				0	0
X	X	X				BSS (Coas Star)		X	X	X			
X	X					SPA (Coas Pitch, deg)		X	X				
X	X	X				SXP (Coas X Po , deg)		X	X	X			
	0					LAT (degrees)	N61		0				
						LONG							
+						RTGO (nmi) EMS		+					
+						VIO (ft/s)		+					
						GET 0.05 g Hr:min:s							
						SET STARS							
X	X	X				R_{Align}		X	X	X			
X	X	X				P_{Align}		X	X	X			
X	X	X				Y_{Align}		X	X	X			
						ULLAGE							

NOTES:

P40 SPS THRUSTING CSM

V37 Enter, 40 Enter

V50 N18 Flashing, Request Maneuver to FDAI R, P, Y Angles

V06 N18, FDAI R, P, Y Angles After Maneuver to Burn Attitude

V50 N25 Flashing, R1 = 00204, Gimbal Actuator Test Option

V06 N40, Time from Ignition, Velocity to be Gained, Measured Change in Velocity

V99 N40 Flashing, Engine On Enable Request

V06 N40, Time from Cutoff, Velocity to be Gained, Measured Change in Velocity

V16 N40 Flashing, Final Values at Engine Cutoff

V16 N85 Flashing, Body Axes Residuals (to be Nulled)

V37 Flashing, V82 Enter

V16 N44 Flashing, Apogee Altitude, Perigee Altitude, Time to Freefall to 35 K ft Moon Orbit, 300 K ft Earth Orbit

					50-18	Roll
						Pitch (deg)
						Yaw
					06-18	Roll
						Pitch (deg)
						Yaw
		X			06-40	TFI (min:s)
						VG (ft/s)
						ΔVM (ft/s)
		X			06-40	TFC (min:s)
						VG (ft/s)
						ΔVM (ft/s)
		X			16-40	TFC (min:s)
						VG (ft/s)
						ΔVM (ft/s)
					85	X
						Y Residuals (ft/s)
						Z
					85	X
						Y TRIM (ft/s)
						Z
					44	HA (nmi)
						HP (nmi)
		X				TFF (min:s)

P41 – RCS THRUSTING

V37 Enter, 41 Enter

V50 N18 Flashing, Request Maneuver to FDAI R, P, Y, Angles

V06 N18, FDAI R, P, Y Angles After Maneuver to Burn Attitude

V06 N85, X, Y, Z Body Axes Velocity to be Gained

V16 N85 (Average G on at TIG -30) Velocity to be Gained

V16 N85 Flashing, Body Axes Residuals (to be Nulled)

					50-18	Roll
						Pitch (deg)
						Yaw
					06-18	Roll
						Pitch (deg)
						Yaw
					06-85	X
						Y VG (ft/s)
						Z
					16-85	X
						Y VG (ft/s)
						Z
					16-85	X
						Y Residuals (ft/s)
						Z
						X
						Y Trim (ft/s)
						Z

P37 – RETURN TO EARTH

V37 Enter, 37 Enter

V06 N33 Flashing

Time of Ignition (h, min, 0.01 s)

V06 N60 Flashing

Blank, ΔV_Desired, GAMMA EI Desired (ft/s, 0.01 deg)

V06 N61 Flashing

Impact Latitude and Longitude (0.01 deg, 0.01 deg)

V06 N39 Flashing

ΔT of Transfer (h, min, 0.01 s)

V06 N60 Flashing

Blank, V Predicted GAMMA E1 (ft/s, 0.01 deg)

V06 N81 Flashing

ΔVX (LV), ΔVY (LV), ΔVZ (LV) at TIG (0.1 ft/s)

V04 N06 Flashing

R1: 00007

R2: 0000 X (1 – SPS, 2–RCS)

V06 N33 Flashing

Time of Ignition (h, min, 0.01 s)

V16 N45 Flashing

Marks, TFI, Middle Gimbal Angle (marks, min/s, 0.01 deg)

L/O +25

		●		Time of Ignition (h, min)	N33				●	
⊠				ΔV Required (ft/s)	N60	⊠				
⊠				Longitude of Splash Point (deg)		⊠				
		●		Time of Entry Interface (h, min)					●	

L/O +35

L/O +45

		●		Time of Ignition (h, min)	N33				●	
⊠				ΔV Required (ft/s)	N60	⊠				
⊠				Longitude of Splash Point (deg)		⊠				
		●		Time of Entry Interface (h, min)					●	

L/O +60

P30—EXTERNAL ΔV

MCC2

V37 Enter, 30 Enter

V06 N33 Flashing, Load Desired GETI

V06 N81 Flashing, Load Desired ΔV

						Purpose							
		/				Prop/Guidance				/			
+						Weight (lb)	N47	+					
	0	0				P_{Trim}	N48		0	0			
	0	0				Y_{Trim} (degrees)			0	0			
+	0	0				Hours	N33	+	0	0			
+	0	0	0			Minutes GETI		+	0	0	0		
+	0					Seconds		+	0				
						ΔV_X	N81						
						ΔV_Y LV							
						ΔV_Z (ft/s)							
X	X	X				R		X	X	X			
X	X	X				P IMU Gimbal Angles (deg)		X	X	X			
X	X	X				Y		X	X	X			
+						H_{Apogee}	N44	+					
						$H_{Perigee}$ nmi							
+						ΔVT (ft/s)		+					
X	X	X				ET (min:s)		X	X	X			
X						ΔVC (ft/s)		X					
X	X	X	X			SXTStar		X	X	X	X		
+					0	SFT (degrees)		+					0
+				0	0	TRN (degrees)		+				0	0
X	X	X				BSS (Coas Star)		X	X	X			
X	X					SPA (Coas Pitch, deg)		X	X				
X	X	X				SXP (Coas X Pos, deg)		X	X	X			
	0					LAT	N61		0				
						LONG (degrees)							
+						RTGO (nmi) EMS		+					
+						VIO (ft/s)		+					
						GET 0.05 g Hr:min:s							
						SET STARS							
X	X	X				R_{Align}		X	X	X			
X	X	X				P_{Align}		X	X	X			
X	X	X				Y_{Align}		X	X	X			
						ULLAGE							

NOTES:

P40 SPS THRUSTING CSM — MCC 2

V37 Enter, 40 Enter

V50 N18 Flashing, Request Maneuver to FDAI R, P, Y Angles

V06 N18, FDAI R, P, Y Angles After Maneuver to Burn Attitude

V50 N25 Flashing, R1 = 00204, Gimbal Actuator Test Option

V06 N40, Time from Ignition, Velocity to be Gained, Measured Change in Velocity

V99 N40 Flashing, Engine On Enable Request

V06 N40, Time from Cutoff, Velocity to be Gained, Measured Change in Velocity

V16 N40 Flashing, Final Values at Engine Cutoff

V16 N85 Flashing, Body Axes Residuals (to be Nulled)

V37 Flashing, V82 Enter

V16 N44 Flashing, Apogee Altitude, Perigee Altitude, Time to Freefall to 35 K ft Moon Orbit, 300 K ft Earth Orbit

P41 RCS THRUSTING

V37 Enter, 41 Enter

V50 N18 Flashing, Request Maneuver to FDAI R, P, Y, Angles

V06 N18, FDAI R, P, Y Angles After Maneuver to Burn Attitude

V06 N85, X, Y, Z Body Axes Velocity to be Gained

V16 N85 (Average G on at TIG -30) Velocity to be Gained

V16 N85 Flashing, Body Axes Residuals (to be Nulled)

50-18	Roll	
	Pitch	(deg)
	Yaw	
06-18	Roll	
	Pitch	(deg)
	Yaw	
06-40	TFI (min s)	
	VG (ft/s)	
	ΔVM (ft/s)	
06-40	TFC (min s)	
	VG (ft/s)	
	ΔVM (ft/s)	
16-40	TFC (min s)	
	VG (ft/s)	
	ΔVM (ft/s)	
85	X	
	Y	Residuals (ft/s)
	Z	
85	X	
	Y	TRIM (ft/s)
	Z	
44	HA (nmi)	
	HP (nmi)	
	TFF (min s)	

50-18	Roll	
	Pitch	(deg)
	Yaw	
06-18	Roll	
	Pitch	(deg)
	Yaw	
06-85	X	
	Y	VG (ft/s)
	Z	
16-85	X	
	Y	VG (ft/s)
	Z	
16-85	X	
	Y	Residuals (ft/s)
	Z	
	X	
	Y	Trim (ft/s)
	Z	

P30–EXTERNAL ΔV

MCC3

V37 Enter, 30 Enter

V06 N33 Flashing, Load Desired GETI

V06 N81 Flashing, Load Desired ΔV

						Purpose							
		/				ProP/Guidance				/			
+						Weight (lb)	N47	+					
	0	0				P_{Trim}	N48		0	0			
	0	0				Y_{Trim} (degrees)			0	0			
+	0	0				Hours	N33	+	0	0			
+	0	0	0			Minutes GETI		+	0	0	0		
+	0					Seconds		+	0				
						ΔV_X	N81						
						ΔV_Y LV							
						ΔV_Z (ft/s)							
X	X	X				R		X	X	X			
X	X	X				P IMU Gimbal Angles (deg)		X	X	X			
X	X	X				Y		X	X	X			
+						H_{Apogee}	N44	+					
						$H_{Perigee}$ nmi							
+						ΔVT (ft/s)		+					
X	X	X				BT (min:s)		X	X	X			
X						ΔVC (ft/s)		X					
X	X	X	X			SXTStar		X	X	X	X		
+					0	SFT (degrees)		+					0
+				0	0	TRN (degrees)		+				0	0
X	X	X				BSS (Coas Star)		X	X	X			
X	X					SPA (Coas Pitch, deg)		X	X				
X	X	X				SXP (Coas X Pos, deg)		X	X	X			
	0					LAT	N61		0				
						LONG (degrees)							
+						RTGO (nmi) EMS		+					
+						VIO (ft/s)		+					
						GET 0.05 g Hr:min:s							
						SET STARS							
X	X	X				R_{Align}		X	X	X			
X	X	X				P_{Align}		X	X	X			
X	X	X				Y_{Align}		X	X	X			
						ULLAGE							

NOTES:

P40 SPS THRUSTING CSM

V37 Enter, 40 Enter
V50 N18 Flashing, Request Maneuver to FDAI R, P, Y Angles
V06 N18, FDAI R, P, Y Angles After Maneuver to Burn Attitude
V50 N25 Flashing, R1 = 00204, Gimbal Actuator Test Option
V06 N40, Time from Ignition, Velocity to be Gained, Measured Change in Velocity
V99 N40 Flashing, Engine On Enable Request
V06 N40, Time from Cutoff, Velocity to be Gained, Measured Change in Velocity
V16 N40 Flashing, Final Values at Engine Cutoff
V16 N85 Flashing, Body Axes Residuals (to be Nulled)
V37 Flashing, V87 Enter
V16 N44 Flashing, Apogee Altitude, Perigee Altitude, Time to Freefall to 35 K ft Moon Orbit, 300 K ft Earth Orbit

						50-18	Roll Pitch (deg) Yaw	
						06-18	Roll Pitch (deg) Yaw	
		X				06-40	TFI (min s) VG (ft/s) ΔVM (ft/s)	
		X				06-40	TFC (min s) VG (ft/s) ΔVM (ft/s)	
		X				16-40	TFC (min s) VG (ft/s) ΔVM (ft/s)	
						85	X Y Residuals (ft/s) Z	
						85	X Y TRIM (ft/s) Z	
						44	HA (nmi) HP (nmi) TFF (min s)	
			X					

P41 - RCS THRUSTING

V37 Enter, 41 Enter
V50 N18 Flashing, Request Maneuver to FDAI R, P, Y, Angles
V06 N18, FDAI R, P, Y Angles After Maneuver to Burn Attitude
V06 N85, X, Y, Z Body Axes Velocity to be Gained
V16 N85 (Average G on at TIG -30) Velocity to be Gained
V16 N85 Flashing, Body Axes Residuals (to be Nulled)

						50-18	Roll Pitch (deg) Yaw	
						06-18	Roll Pitch (deg) Yaw	
						06-85	X Y VG (ft/s) Z	
						16-85	X Y VG (ft/s) Z	
						16-85	X Y Residuals (ft/s) Z	
							X Y Trim (ft/s) Z	

P30–EXTERNAL ΔV
MCC-4 & PERICYNTHION + 2HR

V37 Enter, 30 Enter

V06 N33 Flashing, Load Desired GETI

V06 N81 Flashing, Load Desired ΔV

						Purpose								
						Prop/Guidance								
+						Weight (lb)	N47	+						
	0	0				P_{Trim}	N48		0	0				
	0	0				Y_{Trim} (degrees)			0	0				
+	0	0				Hours	N33	+	0	0				
+	0	0	0			Minutes GETI		+	0	0	0			
+	0					Seconds		+	0					
						ΔV_X	N81							
						ΔV_Y LV								
						ΔV_Z (ft/s)								
X	X	X				R		X	X	X				
X	X	X				P IMU Gimbal Angles (deg)		X	X	X				
X	X	X				Y		X	X	X				
+						H_{Apogee}	N44	+						
						$H_{Perigee}$ nmi								
+						ΔVT (ft/s)		+						
X	X	X				BT (min:s)		X	X	X				
X						ΔVC (ft/s)		X						
X	X	X	X			SXT Star		X	X	X	X			
+					0	SFT (degrees)		+					0	
+				0	0	TRN (degrees)		+				0	0	
X	X	X				BSS (Coas Star)		X	X	X				
X	X					SPA (Coas Pitch, deg)		X	X					
X	X	X				SXP (Coas X Pos, deg)		X	X	X				
	0					LAT	N61		0					
						LONG (degrees)								
+						RTGO (nmi) EMS		+						
+						VIO (ft/s)		+						
						GET 0.05 g Hr:min:s								
						SET STARS								
X	X	X				R_{Align}		X	X	X				
X	X	X				P_{Align}		X	X	X				
X	X	X				Y_{Align}		X	X	X				
						ULLAGE								

NOTES:

P40 – SPS THRUSTING CSM

V37 Enter, 40 Enter
V50 N18 Flashing, Request Maneuver to FDAI R, P, Y Angles
V06 N18, FDAI R, P, Y Angles After Maneuver to Burn Attitude
V50 N25 Flashing, R1 = 0 0 2 0 4, Gimbal Actuator Test Option
V06 N40, Time from Ignition, Velocity to be Gained, Measured Change in Velocity
V99 N40 Flashing, Engine On Enable Request
V06 N40, Time from Cutoff, Velocity to be Gained, Measured Change in Velocity
V16 N40 Flashing, Final Values at Engine Cutoff
V16 N85 Flashing, Body Axes Residuals (to be Nulled)
V37 Flashing, V82 Enter
V16 N44 Flashing, Apogee Altitude, Perigee Altitude, Time to Freefall to 35 K ft Moon Orbit, 300 K ft Earth Orbit

P41 – RCS THRUSTING

V37 Enter, 41 Enter
V50 N18 Flashing, Request Maneuver to FDAI R, P, Y, Angles
V06 N18, FDAI R, P, Y Angles After Maneuver to Burn Attitude
V06 N85, X, Y, Z Body Axes Velocity to be Gained
V16 N85 (Average G on at TIG -30) Velocity to be Gained
V16 N85 Flashing, Body Axes Residuals (to be Nulled)

P40

						50-18	Roll	
							Pitch	(deg)
							Yaw	
						06-18	Roll	
							Pitch	(deg)
							Yaw	
			X			06-40	TFI (min:s)	
							VG (ft/s)	
							ΔVM (ft/s)	
			X			06-40	TFC (min:s)	
							VG (ft/s)	
							ΔVM (ft/s)	
			X			16-40	TFC (min:s)	
							VG (ft/s)	
							ΔVM (ft/s)	
						85	X	
							Y	Residuals (ft/s)
							Z	
						85	X	
							Y	TRIM (ft/s)
							Z	
						44	HA (nmi)	
							HP (nmi)	
			X				TFF (min:s)	

P41

						50-18	Roll	
							Pitch	(deg)
							Yaw	
						06-18	Roll	
							Pitch	(deg)
							Yaw	
						06-85	X	
							Y	VG (ft/s)
							Z	
						16-85	X	
							Y	VG (ft/s)
							Z	
						16-85	X	
							Y	Residuals (ft/s)
							Z	
							X	
							Y	Trim (ft/s)
							Z	

SIM-BAY DOOR JETTISON LOI-4.5 Hours

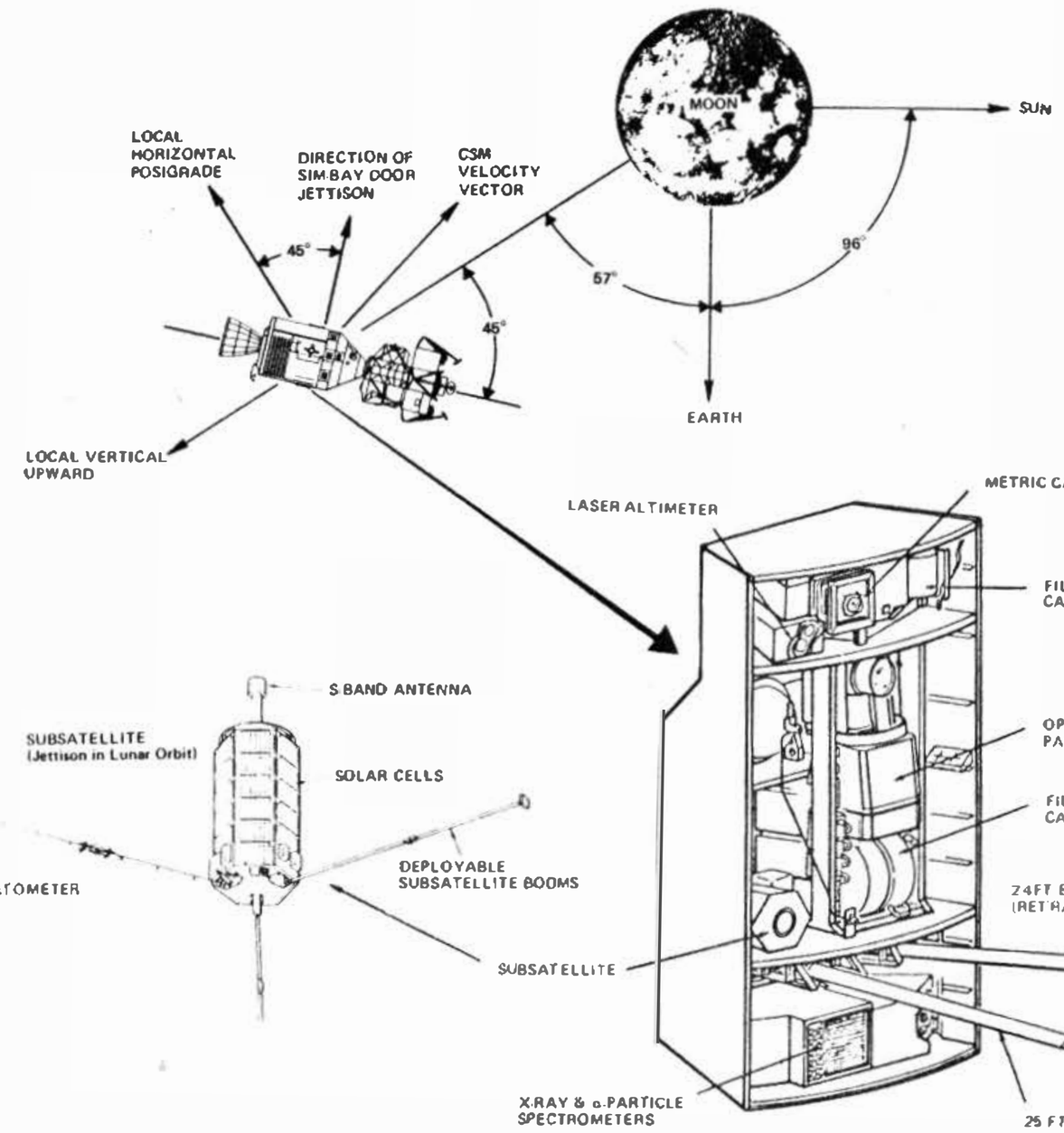

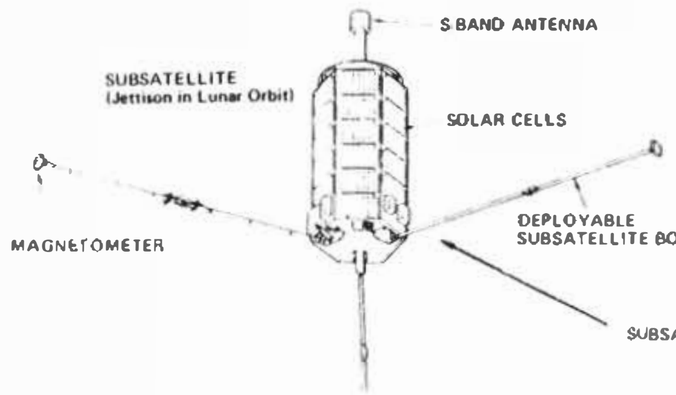

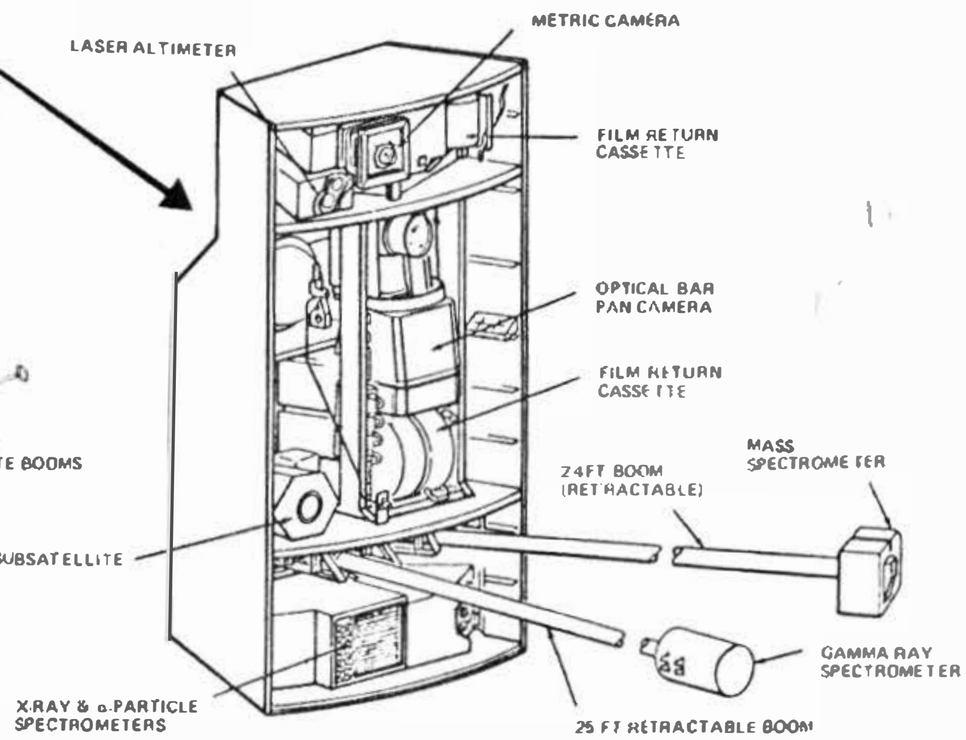

LR 30

RCS THRUSTER CONSTRAINTS FOR SIM EXPERIMENTS

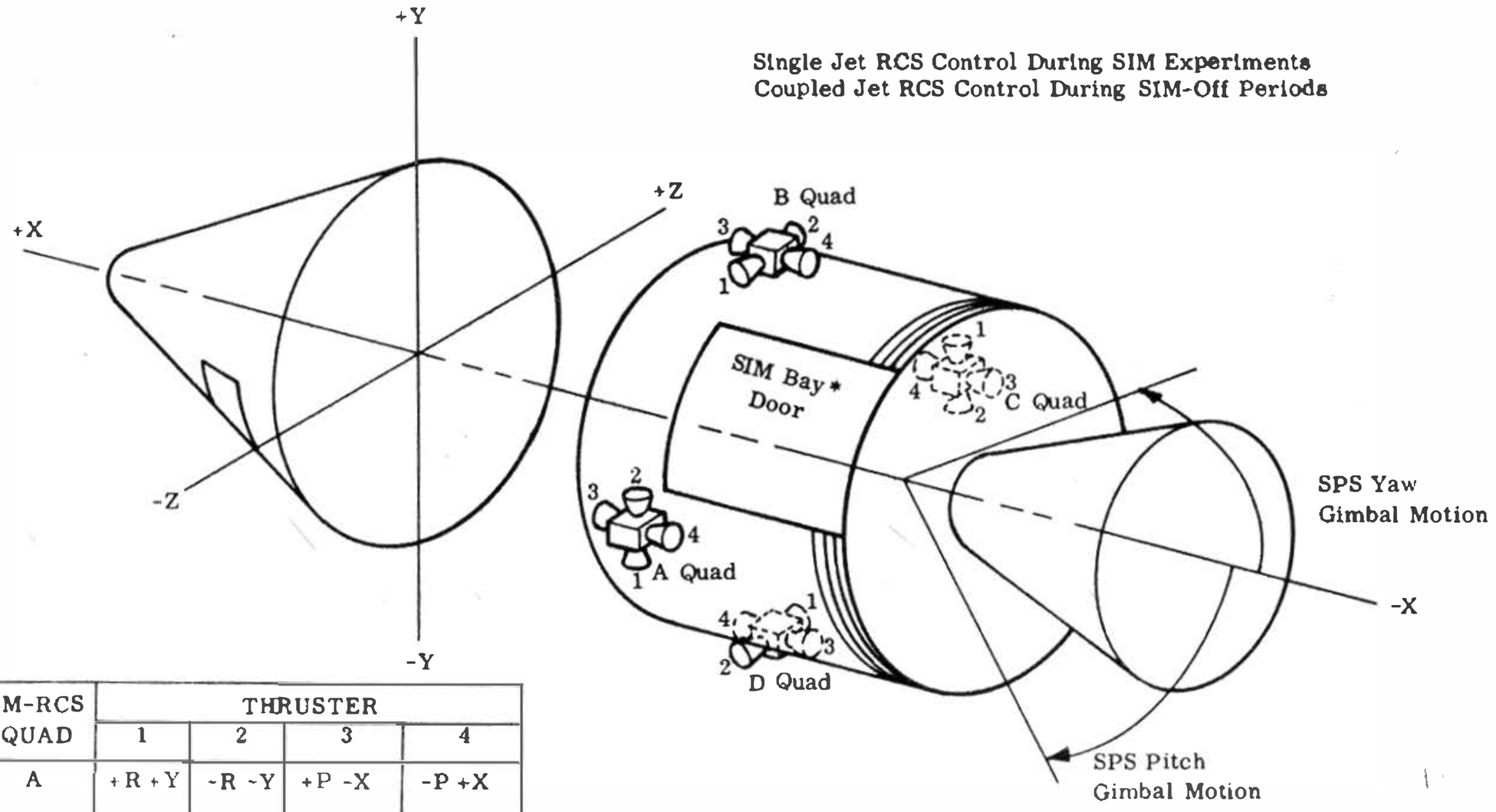

Single Jet RCS Control During SIM Experiments
Coupled Jet RCS Control During SIM-Off Periods

SM-RCS QUAD	THRUSTER			
	1	2	3	4
A	+R +Y	-R -Y	+P -X	-P +X
B	+R +Z	-R -Z	$+Y_w$ -X	$-Y_w$ +X
C	+R -Y	-R +Y	+P +X	-P -X
D	+R -Z	-R +Z	$+Y_w$ +X	$-Y_w$ -X

*Use of Thrusters A2, A4, B1 and B4 is constrained when SIM experiments are in process.
Use of Quads A and B is constrained by CSM EVA to retrieve film cassettes from SIM Bay.

P30–EXTERNAL ΔV

LOI (Preliminary) & TEI 4

V37 Enter, 30 Enter

V06 N33 Flashing, Load Desired GETI

V06 N81 Flashing, Load Desired ΔV

						Purpose							
		/				Prop/Guidance			/				
+						Weight (lb)	N47	+					
	0	0				PTrim	N48		0	0			
	0	0				YTrim (degrees)			0	0			
+	0	0				Hours	N33	+	0	0			
+	0	0	0			Minutes GETI		+	0	0	0		
+	0					Seconds		+	0				
						ΔV_X	N81						
						ΔV_Y LV							
						ΔV_Z (ft/s)							
X	X	X				R		X	X	X			
X	X	X				P IMU Gimbal Angles (deg)		X	X	X			
X	X	X				Y		X	X	X			
+						HApogee	N44	+					
						Hperigee nmi							
+						ΔVT (ft/s)		+					
X	X	X				BT (min:s)		X	X	X			
X						ΔVC (ft/s)		X					
X	X	X	X			SXTStar		X	X	X	X		
+					0	SFT (degrees)		+					0
+				0	0	TRN (degrees)		+				0	0
X	X	X				BSS (Coas Star)		X	X	X			
X	X					SPA (Coas Pitch, deg)		X	X				
X	X	X				SXP (Coas X Pos, deg)		X	X	X			
	0					LAT (degrees)	N61		0				
						LONG							
+						RTGO (nmi) EMS		+					
+						VIO (ft/s)		+					
						GET 0.05 g Hr:min:s							
						SET STARS							
X	X	X				RAlign		X	X	X			
X	X	X				PAlign		X	X	X			
X	X	X				YAlign		X	X	X			
						ULLAGE							

NOTES:

P30-EXTERNAL ΔV
LOI

V37 Enter, 30 Enter

V06 N33 Flashing, Load Desired GETI

V06 N81 Flashing, Load Desired ΔV

						Purpose											
			/			Prop/Guidance					/						
+						Weight (lb)	N47	+									
	0	0				P_{Trim}	N48		0	0							
	0	0				Y_{Trim} (degrees)			0	0							
+	0	0				Hours	N33	+	0	0							
+	0	0	0			Minutes GETI		+	0	0	0						
+	0					Seconds		+	0								
						ΔV_X	N81										
						ΔV_Y LV											
						ΔV_Z (ft/s)											
X	X	X				R		X	X	X							
X	X	X				P IMU Gimbal Angles (deg)		X	X	X							
X	X	X				Y		X	X	X							
+						H_{Apogee}	N44	+									
						$H_{Perigee}$ nmi											
+						ΔVT (ft/s)		+									
X	X	X				BT (min:s)		X	X	X							
X						ΔVC (ft/s)		X									
X	X	X	X			SXT Star		X	X	X	X						
+					0	SFT (degrees)		+					0				
+				0	0	TRN (degrees)		+				0	0				
X	X	X				BSS (Coas Star)		X	X	X							
X	X					SPA (Coas Pitch, deg)		X	X								
X	X	X				SXP (Coas X Pos, deg)		X	X	X							
	0					LAT	N61		0								
						LONG (degrees)											
+						RTGO (nmi) EMS		+									
+						V10 (ft/s)		+									
						GET 0.05 g Hr:min:s											
						SET STARS											
X	X	X				R_{Align}		X	X	X							
X	X	X				P_{Align}		X	X	X							
X	X	X				Y_{Align}		X	X	X							
						ULLAGE											

NOTES:

LUNAR ORBIT INSERTION

EVENT	BT/ΔV	G.E.T.	PROPULSION/ GUIDANCE	PRETHRUST TARGETING
LOI (RETROGRADE)	392/ 2,997.9	78:31:14.7	SPS/G&N EXT ΔV (P-40)	P-30
	ΔV_x N85		+ x x	h
	ΔV_y RESIDUALS (ft/s)		+ x x x	min GET
	ΔV_z (BODY AXIS)		+ x	s
— — — • — $V_{x_{TRIM}}$	— — — • — $V_{y_{TRIM}}$		— — — • — $V_{z_{TRIM}}$	(ft/s)

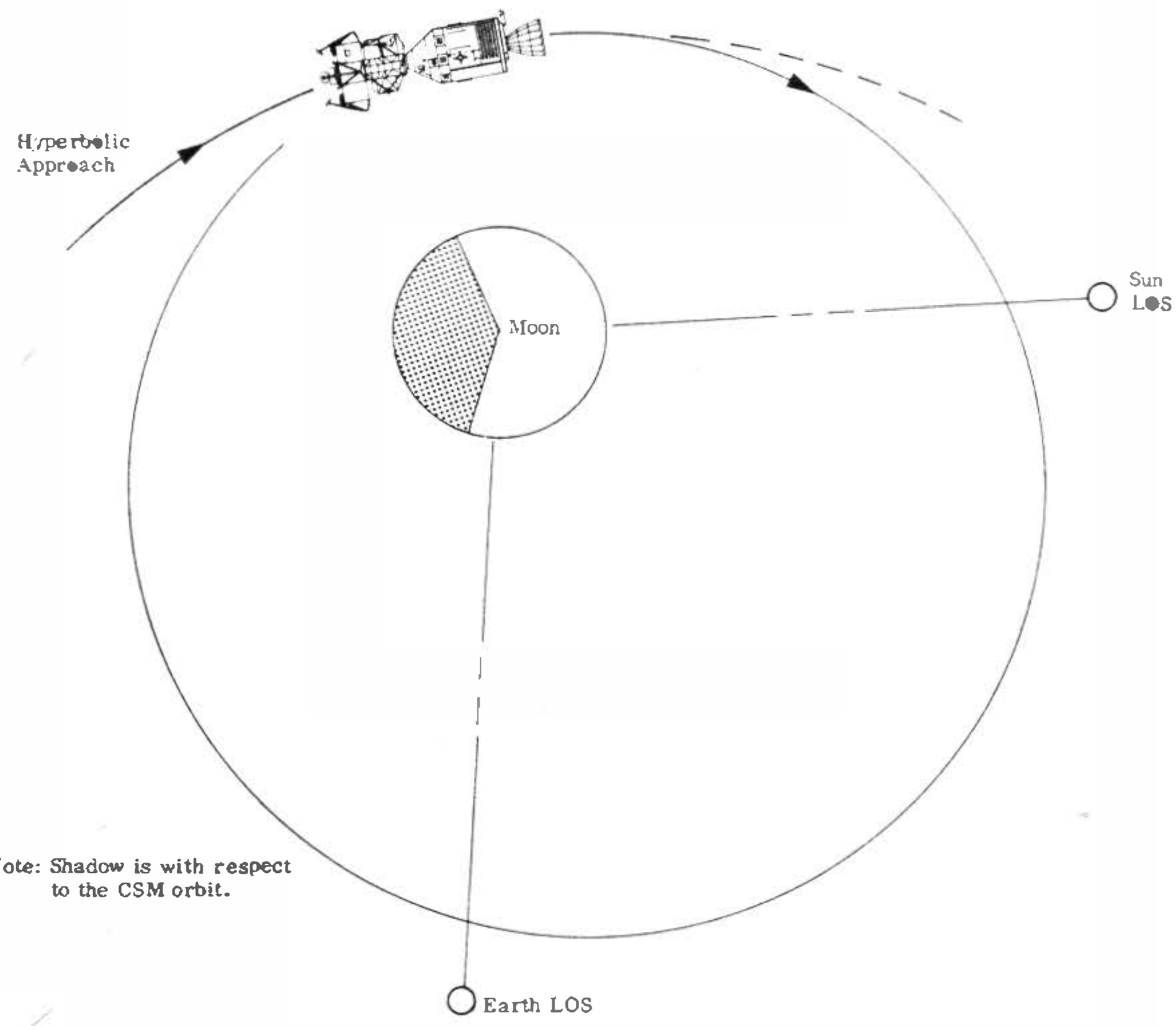

Note: Shadow is with respect to the CSM orbit.

P30—EXTERNAL ΔV
TEI 5 & DOI

V37 Enter. 30 Enter

V06 N33 Flashing. Load Desired GETI

V06 N81 Flashing, Load Desired ΔV

						Purpose								
		/				Prop/Guidance				/				
+						Weight (lb)	N47	+						
	0	0				PTrim	N48		0	0				
	0	0				YTrim (degrees)			0	0				
+	0	0				Hours	N33	+	0	0				
+	0	0	0			Minutes GETI		+	0	0	0			
+	0					Seconds		+	0					
						ΔV_X	N81							
						ΔV_Y LV								
						ΔV_Z (ft/s)								
X	X	X				R		X	X	X				
X	X	X				P IMU Gimbal Angles (deg)		X	X	X				
X	X	X				Y		X	X	X				
+						H_{Apogee}	N44	+						
						HPerigee (nmi)								
+						ΔVT (ft/s)		+						
X	X	X				BT (min:s)		X	X	X				
X						ΔVC (ft/s)		X						
X	X	X	X			SXTStar		X	X	X	X			
+					0	SFT (degrees)		+					0	
+				0	0	TRN (degrees)		+				0	0	
X	X	X				BSS (Coas Star)		X	X	X				
X	X					SPA (Coas Pitch, deg)		X	X					
X	X	X				SXP (Coas X Pos, deg)		X	X	X				
	0					LAT (degrees)	N61		0					
						LONG								
+						RTGO (nmi) EMS		+						
+						V10 (ft/s)		+						
						GET 0.05 g Hr:min:s								
						SET STARS								
X	X	X				R_{Align}		X	X	X				
X	X	X				P_{Align}		X	X	X				
X	X	X				Y_{Align}		X	X	X				
						ULLAGE								

NOTES:

P24 — LANDMARK TRACKING

CSM Landmark Tracking Profile

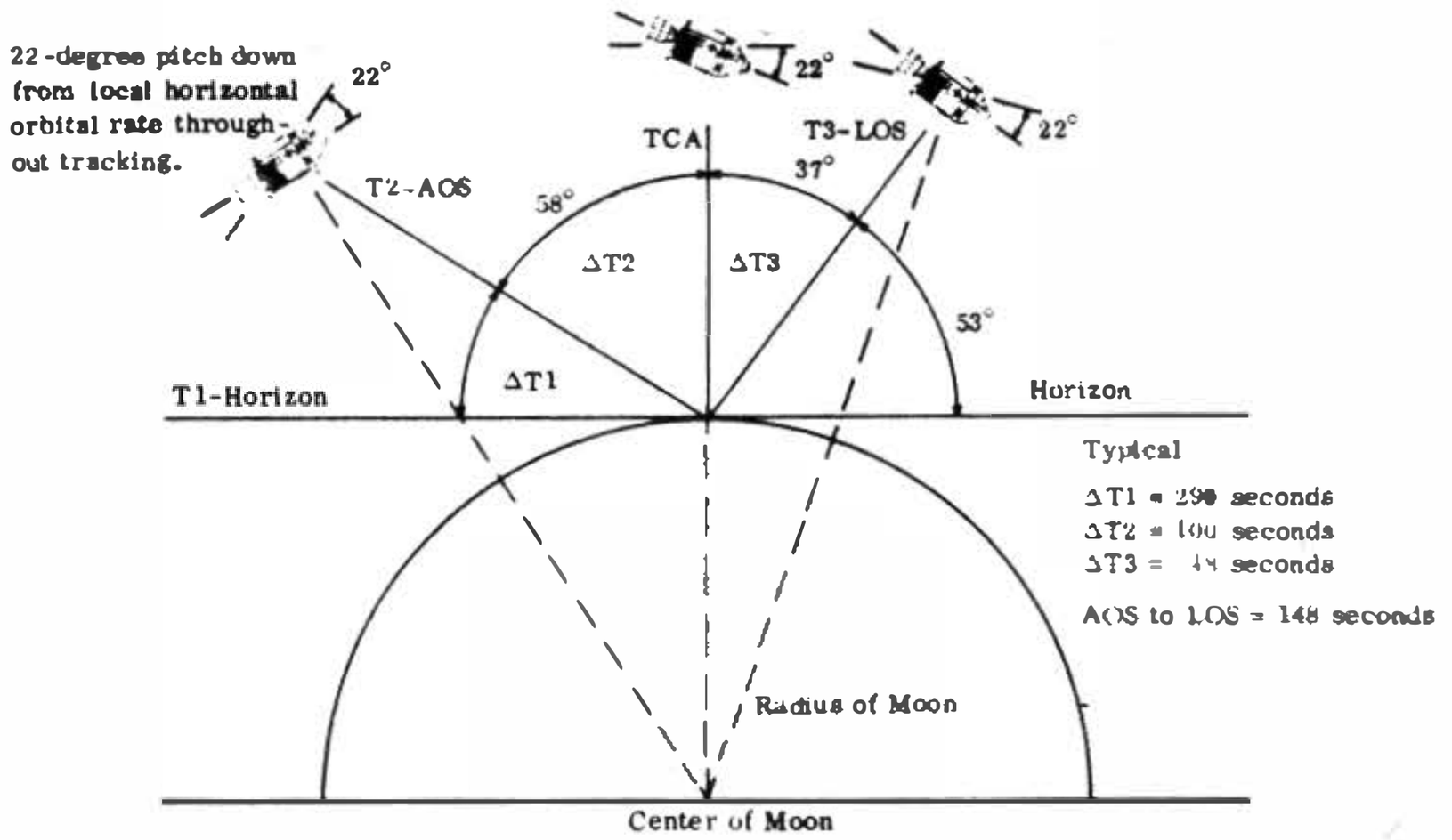

TGT: ( )

T_1 _ _ _ : _ _ : _ _

T_2 _ _ _ : _ _ : _ _

TCA _ _ _ : _ _ : _ _

T_3 _ _ _ : _ _ : _ _

R _ _ _ ° P _ _ _ ° Y _ _ _ ° (T2 ACQ)

N or S nmi _ _ / SA _ _ TA _ _ (T2 ACQ)

N89 LAT _ _ . _ _ _

LONG/2 _ _ . _ _ _

ALT _ _ _ . _ _

TGT: ( )

T_1 _ _ _ : _ _ : _ _

T_2 _ _ _ : _ _ : _ _

TCA _ _ _ : _ _ : _ _

T_3 _ _ _ : _ _ : _ _

R _ _ _ ° P _ _ _ ° Y _ _ _ ° (T2 ACQ)

N or S nmi _ _ / SA _ _ TA _ _ (T2 ACQ)

N89 LAT _ _ . _ _ _

LONG/2 _ _ . _ _ _

ALT _ _ _ . _ _

P24 RATE-AIDED OPTICS TRACKING

CMC - on (req)
ISS - on and aligned
SCS - on
BMAG MODE (3) - RATE 2
G&N PWR OPTICS - on
O T ZERO - ZERO (verify)
OPT MODE - CMC

V37E 24E

F 06 89 LAT, LONG/2, ALT (0.001°, 0.001°, 0.01 nmi)
LOAD LMK COORDS
OPT ZERO - OFF
PRO

06 92 AUTO OPT SHF/TRUN (0.01°, 0.001°)
- F 05 09 00404 (TRUN > 90°)
- MNVR to acquire
- PRO
- or V34E, F 37

OPTICS MODE - MAN

F 51 MARK REQUEST
MARK (as often as desired)
To terminate:
PRO

F 37 XXE
OPT ZERO - ZERO

DESCENT ORBIT INITIATION

EVENT	BT/ΔV	G.E.T.	PROPULSION/ GUIDANCE	PRETHRUST TARGETING
DOI (RETROGRADE)	22.9/207.6	82:39:32.5	SPS/G&N EXT ΔV (P-40)	P-30
	ΔV_x N85		+ x x	b
	ΔV_y RESIDUALS (ft/s)		+ x x x	min GET
	ΔV_z (BODY AXIS)		+ x	s
— — — • — $V_{x_{TRIM}}$	— — — • — $V_{y_{TRIM}}$		— — — • — $V_{z_{TRIM}}$	(ft/s)

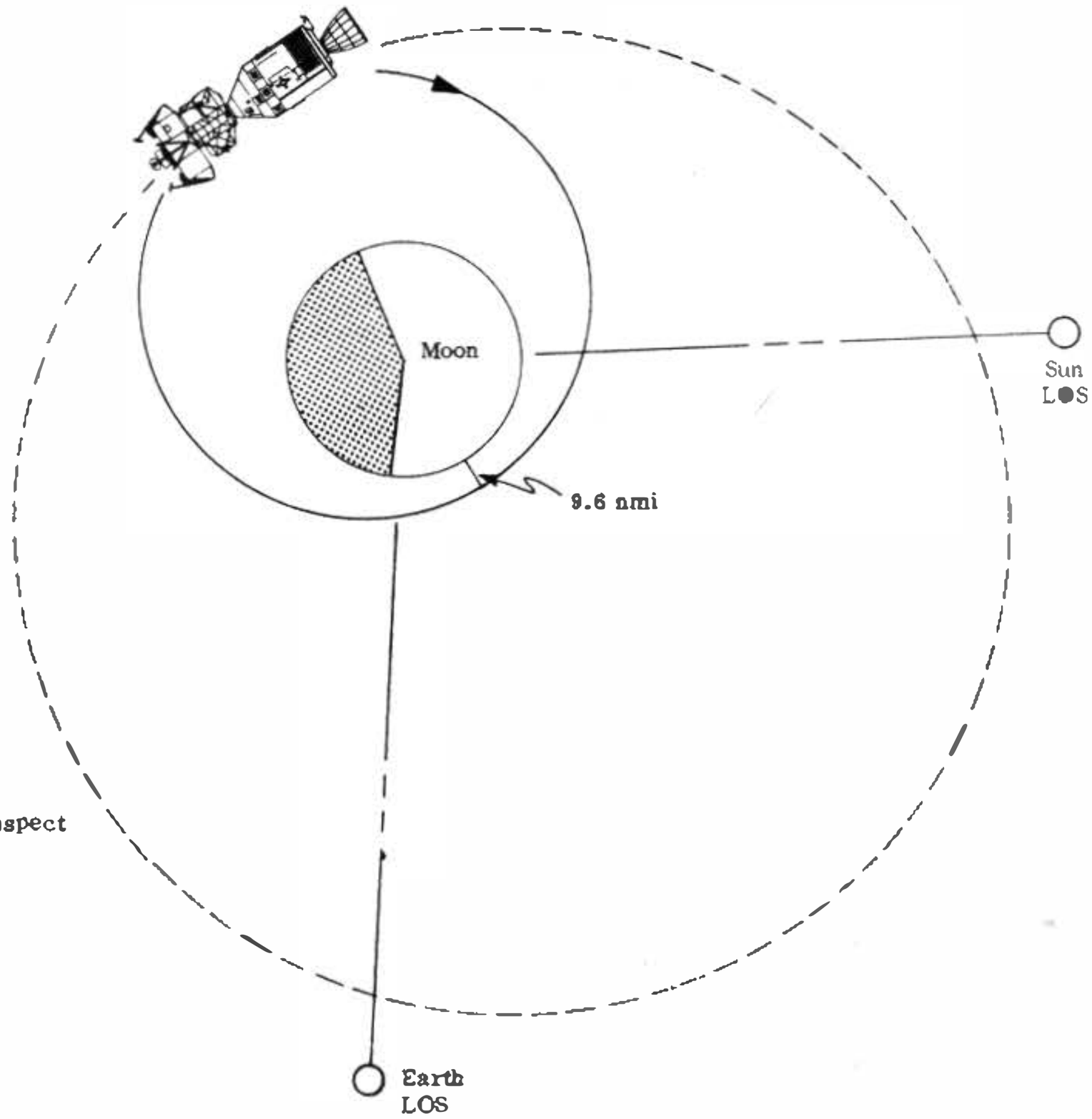

Note: Shadow is with respect to the CSM orbit.

P30–EXTERNAL ΔV

TEI 12 & TEI 19

V37 Enter, 30 Enter

V06 N33 Flashing, Load Desired GET I

V06 N81 Flashing, Load Desired ΔV

						Purpose							
		/				Prop/Guidance				/			
+						Weight (lb)	N47	+					
	0	0				P_{Trim}	N48		0	0			
	0	0				Y_{Trim} (degrees)			0	0			
+	0	0				Hours	N33	+	0	0			
+	0	0	0			Minutes GETI		+	0	0	0		
+	0					Seconds		+	0				
						ΔV_X	N81						
						ΔV_Y LV							
						ΔV_Z (ft/s)							
X	X	X				R		X	X	X			
X	X	X				P IMU Gimbal Angles (Deg)		X	X	X			
X	X	X				Y		X	X	X			
+						H_{Apogee}	N44	+					
						$H_{Perigee}$ nmi							
+						ΔVT (ft/s)		+					
X	X	X				BT (min:s)		X	X	X			
X						ΔVC (ft/s)		X					
X	X	X	X			SXT Star		X	X	X	X		
+					0	SFT (degrees)		+					0
+				0	0	TRN (degrees)		+				0	0
X	X	X				BSS (Coas Star)		X	X	X			
X	X					SPA (Coas Pitch, deg)		X	X				
X	X	X				SXP (Coas X Pos, deg)		X	X	X			
	0					LAT	N61		0				
						LONG (degrees)							
+						RTGO (nmi) EMS		+					
+						VIG (ft/s)		+					
						GET 0.05 g Hr:min:s							
						SET STARS							
X	X	X				RAlign		X	X	X			
X	X	X				PAlign		X	X	X			
X	X	X				YAlign		X	X	X			
						ULLAGE							

NOTES:

P30–EXTERNAL ΔV

Separation

V37 Enter, 30 Enter

V06 N33 Flashing, Load Desired GETI

V06 N81 Flashing, Load Desired ΔV

						Purpose							
		/				Prop/Guidance				/			
+						Weight (lb)	N47	+					
	0	0				P_{Trim}	N48		0	0			
	0	0				Y_{Trim} (degrees)			0	0			
+	0	0				Hours	N33	+	0	0			
+	0	0	0			Minutes GETI		+	0	0	0		
+	0					Seconds		+	0				
						ΔV_X	N81						
						ΔV_Y LV							
						ΔV_Z (ft/s)							
X	X	X				R		X	X	X			
X	X	X				P IMU Gimbal Angles (deg)		X	X	X			
X	X	X				Y		X	X	X			
+						HApogee	N44	+					
						HPerigee nmi							
+						ΔVT (ft/s)		+					
X	X	X				BT (min:s)		X	X	X			
X						ΔVC (ft/s)		X					
X	X	X	X			SXT Star		X	X	X	X		
+					0	SFT (degrees)		+					0
+				0	0	TRN (degrees)		+				0	0
X	X	X				BSS (Coas Star)		X	X	X			
X	X					SPA (Coas Pitch, deg)		X	X				
X	X	X				SXP (Coas X Pos, deg)		X	X	X			
	0					LAT	N61		0				
						LONG (degrees)							
+						RTGO (nmi) EMS		+					
+						VIO (ft/s)		+					
						GET 0.05 g Hr:min:s							
						SET STARS							
X	X	X				R_{Align}		X	X	X			
X	X	X				P_{Align}		X	X	X			
X	X	X				Y_{Align}		X	X	X			
						ULLAGE							

NOTES:

P24 — LANDMARK TRACKING

CSM Landmark Tracking Profile

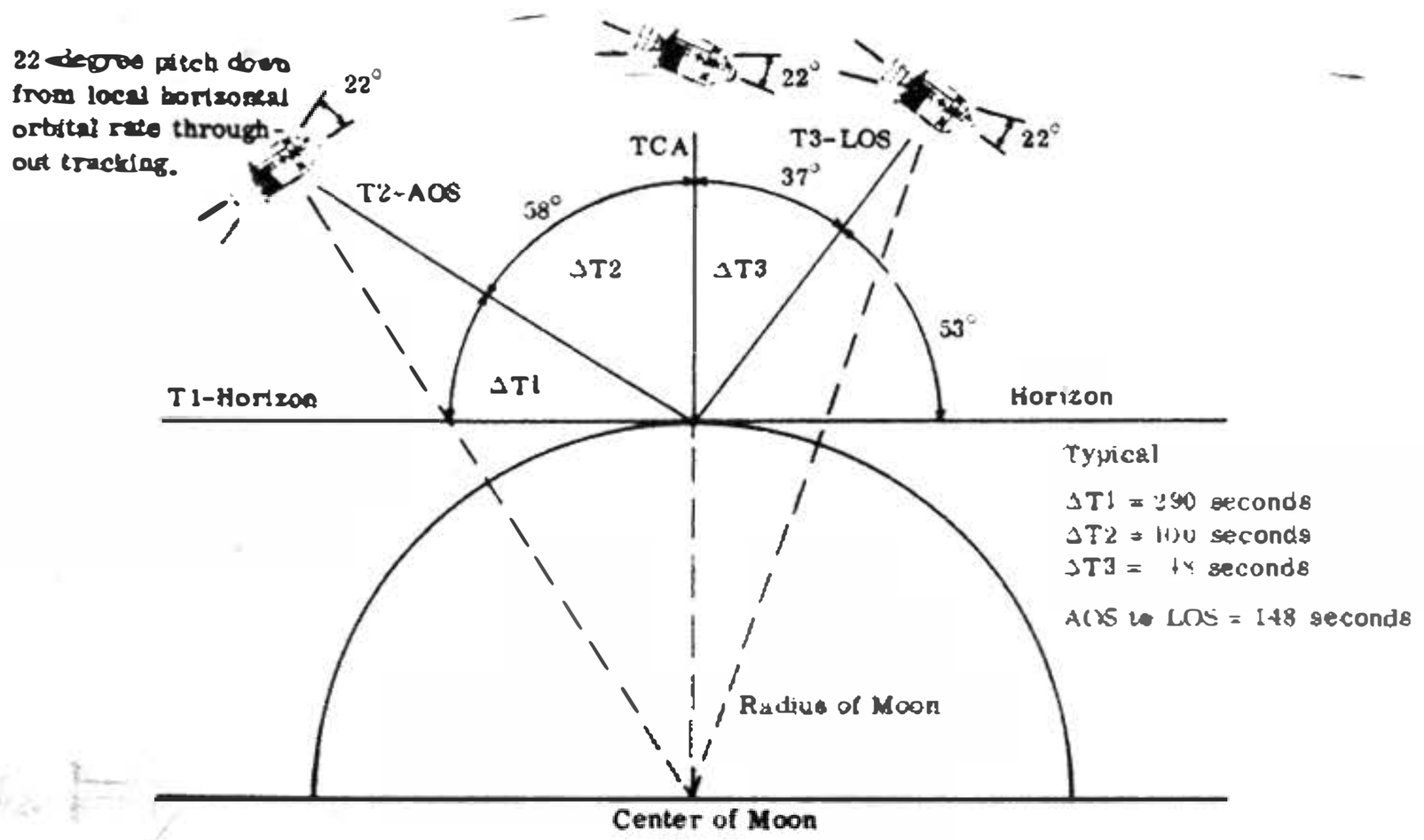

TGT: ( )

T_1 — — —:— —:— —

T_2 — — —:— —:— —

TCA — — —:— —:— —

T_3 — — —:— —:— —

R — — —° P — — —° Y — — —° (T2 ACQ)

N or S nmi — —/SA — — TA — — (T2 ACQ)

N89 LAT — —.— — —

LONG/2 — —.— — —

ALT — — —.— —

TGT: ( )

T_1 — — —:— —:— —

T_2 — — —:— —:— —

TCA — — —:— —:— —

T_3 — — —:— —:— —

R — — —° P — — —° Y — — —° (T2 ACQ)

N or S nmi — —/SA — — TA — — (T2 ACQ)

N89 LAT — —.— — —

LONG/2 — —.— — —

ALT — — —.— —

P24 RATE-AIDED OPTICS TRACKING

CMC - on (req)
ISS - on and aligned
SCS - on
BMAG MODE (3) - RATE 2
G&N PWR OPTICS - on
OPT ZERO - ZERO (verify)
OPT MODE - CMC

V37E 24E

F 06 89 — LAT, LONG/2, ALT (0.001°, 0.001°, 0.01 nmi)
LOAD LMK COORDS
OPT ZERO - OFF
PRO

06 92 — AUTO OPT SHF/TRUN (0.01°, 0.001°)
- F 05 09 00404 (TRUN > 90°)
- MNVR to acquire
- PRO
- or V34E, F 37

OPTICS MODE - MAN

F 51 — MARK REQUEST
MARK (as often as desired)
To terminate:
PRO

F 37 — XXE
OPT ZERO - ZERO

P24 – LANDMARK TRACKING

MARK DATA

+	0	0				Hours		+	0	0			
+	0	0	0			Minutes	GET	+	0	0	0		
+	0					Seconds		+	0				
						P							
						Y	IMU Gimbal Angles (degree)						
						R							
+						Shaft	SXT Angles (degree)	+					
+						Trunnion		+					

+	0	0				Hours		+	0	0			
+	0	0	0			Minutes	GET	+	0	0	0		
+	0					Seconds		+	0				
						P							
						Y	IMU Gimbal Angles (degree)						
						R							
+						Shaft	SXT Angles (degree)	+					
+						Trunnion		+					

+	0	0				Hours		+	0	0			
+	0	0	0			Minutes	GET	+	0	0	0		
+	0					Seconds		+	0				
						P							
						Y	IMU Gimbal Angles (degree)						
						R							
+						Shaft	SXT Angles (degree)	+					
+						Trunnion		+					

NOTES:

LM DOCKED ALIGNMENT

Docking Tunnel Index Angle:

R_c = _____ deg. (Recorded during 1st IVT to LM
Verified during succeeding IVT's)

Docked Coarse Align:

1. CSM should be in Min. Deadband, Attitude Hold.

2. CMP executes V06N20E and reports ICDU angles.

3. CDR calculates coarse align angles:

Outer Gimbal	Inner Gimbal	Middle Gimbal
300.00°	180.00°	360.00°
-_____._____ R_c		
-_____._____ X_{cm}	+_____._____ Y_{cm}	-_____._____ Z_{cm}
=_____._____ X_{lm}	=_____._____ Y_{lm}	=_____._____ Z_{lm}

4. CDR executes V41N20E and loads X, Y, Z CDU angles.

5. CDR executes V44N20E -- IMU goes inertial.

NOTE: The accuracy of this procedure is limited by
(a) the coarse align accuracy of the ISS
(b) vehicle attitude changes between steps 2 and 5.

Docked Fine Align:

6. CMP and CDR enter simultaneous V06N20 in CM and LM. The ICDU angles are recorded and reported to MCC.

GET = _____:_____:_____ (for gyro drift calculation)

	Outer Gimbal	Inner Gimbal	Middle Gimbal
CM:	_____._____	_____._____	_____._____
LM:	_____._____	_____._____	_____._____

7. MCC calculates gyro torquing angles and reports them to LM.

LM GTA's = _____._____ X, _____._____ Y, _____._____ Z

8. CDR disables jet firings and performs fine align (V42E), loading the gyro torquing angles voiced up from MCC.

LM GYRO DRIFT

Docked (Noun 20 Method)

The LM IMU drift check is performed by MCC using a set of simultaneous CM and LM ICDU angles.

Crew Report: GET _____:_____:_____ ΔT = _____.____ hrs.
(Time since previous Noun 20)

	Outer Gimbal	Inner Gimbal	Middle Gimbal
CM:	_____.____	_____.____	_____.____
LM:	_____.____	_____.____	_____.____

MCC calculates gyro torquing angles: □_____.____X, □_____.____Y, □_____.____Z

.230°X, .520°Y, 1.90°Z,

The above limits are based on the following requirements:

1. Maximum platform misalignment at PDI = .1° about X_{sm} to assure that crossrange error at touchdown < 1 kilometer.
2. Maximum platform misalignment at PDI = .5° about Y_{sm} to assure a safe descent abort capability.
3. PGNCS is No/Go if drift rate > 100 meru about any axis.

Although the restrictive requirements concern the state of platform alignment at PDI, high drift rate can negate a perfect platform realignment (P52) performed 80 minutes before PDI.

The equivalent drift rates allowable are:

.145 deg/hr (X) .376 deg/hr (Y) 1.5 deg/hr (Z)

The GTA limits utilize these drift rates, assume 75 minutes between Noun 20 entries, and allow .05° for total measurement error.

Undocked (P52 Method)

The gyro torquing angles obtained during the IMU realignment program (P52) can be used to calculate the rate of platform drift since the last realignment.

Rev. 12 P52 GET = _____:_____:_____

Time of previous align = _____:_____:_____

ΔT (difference) = _____:_____ = _____.____ hours

Gyro Torquing Angles □_____.____°(X) □_____.____°(Y) □_____.____°(Z)

÷ (.015)ΔT (S) S = -1 S = -1 S = +1

= Drift Rate (meru): _____(X) _____(Y) _____(Z)

NOTE: As presently planned, the Rev. 12 GTA's will be torqued out to serve as a baseline for the Rev 13 P52. The time-of-previous-align used in the Rev 12 drift calculation will nominally be the GET of the P52 GTA's during Docked Fine Align. However, allowance must be made for any changes in the compensation values during this period. In spite of the GTA limits defined for Docked Gyro Drift (above), Mission Rules provide for uplinking new compensation values whenever the drift rate exceeds 5 meru on any axis.

Rev. 13 P52 GET = _____:_____:_____

Time of Previous Align = _____:_____:_____

ΔT (difference) = _____:_____ = _____.____ hours
(2.0)

Gyro Torquing Angles Limits □_____.____ °(X) □_____.____ °(Y) □_____.____ °(Z)
.370° .830° 3.000°

GTA ÷ (.015) ΔT (S) S = -1 S = -1 S = +1

= Drift Rate (meru): _____(X) _____(Y) _____(Z)

NOTE: The Rev 13 GTA's will be torqued if they do not exceed the limits shown. These limits are based on the equivalent drift rates allowed during the Docked Gyro Drift measurement (above). They assume 2.0 hours between the two P52's, and allow .06° for AOT measurement errors. If the limits are exceeded PDI will be delayed 1 Rev.

P41 – RCS THRUSTING

Separation

V37 Enter, 41 Enter

V50 N18 Flashing, Request Maneuver to FDAI R, P, Y Angles

V06 N18, FDAI R, P, Y Angles After Maneuver to Burn Attitude

V06 N85, X, Y, Z Body Axes Velocity to be Gained

V16 N85 (Average G on at TIG -30) Velocity to be Gained

V16 N85 Flashing, Body Axes Residuals (to be Nulled)

50-18	Roll	
	Pitch	(deg)
	Yaw	
06-18	Roll	
	Pitch	(deg)
	Yaw	
06-85	X	
	Y	VG (ft/s)
	Z	
16-85	X	
	Y	VG (ft/s)
	Z	
16-85	X	
	Y	Residuals (ft/s)
	Z	
X		
Y	Trim (ft/s)	
Z		

P47–THRUST MONITOR (LM)

Separation

V37 Enter, 47 Enter
V16 N83 Flashing, ΔV XYZ Body Axes
N62 Enter
V16 N62 Flashing, Inertial Velocity, Altitude Rate, Altitude

X	X	X				R				X	X	X			
X	X	X				P	IMU Gimbal Angles (degrees)			X	X	X			
X	X	X				Y				X	X	X			
X	X	X				ST	(min:sl			X	X	X			
						VI	(ft/s)								
						X			N83						
						Y	ΔV ft/s								
						Z									
						V	ft/s		N62						
						HDOT	ft/s								
						H	nmi								

NOTES:

PDI 0 ABORT PAD

+	0	0				Hours		N33	+	0	0				
+	0	0	0			Minutes	GETI		+	0	0	0			
+	0					Seconds		A	+	0					
						ΔV_X		N81							
						ΔV_Y	LV (ft/s)								
						ΔV_Z		B							
+						H_{Apogee}		N42	+						
						$H_{Perigee}$	(nmi)								
+						ΔV_R (ft/s)			+						
X	X	X				BT (min:s)			X	X	X				
X	X	X				R			X	X	X				
X	X	X				P	FDAI Inertial Angles (degrees)		X	X	X				
+						Minutes	TIG (AGS)	373	+						
						ΔV_X		N86							
						ΔV_Y	AGS Targeting (ft/s)								
						ΔV_Z									
+	0	0				Hours		N11	+	0	0				
+	0	0	0			Minutes	TIG of CSI		+	0	0				
+	0					Seconds		C	+	0					
+	0	0				Hours		N37	+	0	0				
+	0	0	0			Minutes	TIG of TPI		+	0	0	0			
+	0					Seconds		D	+	0					

P76 – STATE VECTOR UPDATE (CSM)

V37 Enter, 76 Enter

V06N33 Flashing, TIG

V06N84 Flashing, ΔV (LV) of CSM

						PURPOSE							
+	0	0				Hours	N33	+	0	0			
+	0	0	0			Minutes TIG		+	0	0	0		
+	0					Seconds		+	0				
						ΔV_X	N84						
						ΔV_Y LV of CSM (ft/s)							
						ΔV_Z							

						PURPOSE							
+	0	0				Hours	N33	+	0	0			
+	0	0	0			Minutes TIG		+	0	0	0		
+	0					Seconds		+	0				
						ΔV_X	N84						
						ΔV_Y LV of CSM (ft/s)							
						ΔV_Z							

NOTES:

P30–EXTERNAL ΔV
CIRCULARIZATION

V37 Enter, 30 Enter

V06 N33 Flashing, Load Desired GETI

V06 N81 Flashing, Load Desired ΔV

						Purpose							
			/			Prop/Guidance				/			
+						Weight (lb)	N47	+					
	0	0				P_{Trim}	N48		0	0			
	0	0				Y_{Trim} (degrees)			0	0			
+	0	0				Hours	N33	+	0	0			
+	0	0	0			Minutes GETI		+	0	0	0		
+	0					Seconds		+	0				
						ΔV_X	N81						
						ΔV_Y LV							
						ΔV_Z (ft/s)							
X	X	X				R		X	X	X			
X	X	X				P IMU Gimbal Angles (deg)		X	X	X			
X	X	X				Y		X	X	X			
+						H_{Apogee}	N44	+					
						$H_{Perigee}$ nmi							
+						ΔVT (ft/s)		+					
X	X	X				BT (min:s)		X	X	X			
X						ΔVC (ft/s)		X					
X	X	X	X			SXT Star		X	X	X	X		
+					0	SFT (degrees)		+					0
+				0	0	TRN (degrees)		+				0	0
X	X	X				BSS (Coas Star)		X	X	X			
X	X					SPA (Coas Pitch, deg)		X	X				
X	X	X				SXP (Coas X Pos, deg)		X	X	X			
	0					LAT (degrees)	N61		0				
						LONG							
+						RTGO (nmi) EMS		+					
+						VIO (ft/s)		+					
						GET 0.05 g Hr:min:s							
						SET STARS							
X	X	X				R_{Align}		X	X	X			
X	X	X				P_{Align}		X	X	X			
X	X	X				Y_{Align}		X	X	X			
						ULLAGE							

NOTES:

CSM LUNAR ORBIT CIRCULARIZATION

EVENT	BT/ΔV	G.E.T.	PROPULSION/ GUIDANCE	PRETHRUST TARGETING
CSM CIRCULARIZATION (POSIGRADE)	3.9/70.8	101:34:55.1	SPS/G&N EXT ΔV (P-40)	P-30
	ΔV_x N85		+ x x	h
	ΔV_y RESIDUALS (ft/s)		+ x x x	min GET
	ΔV_z (BODY AXIS)		+ x	s
— — — • — $V_{x_{TRIM}}$	— — — • — $V_{y_{TRIM}}$		— — — • — $V_{z_{TRIM}}$	(ft/s)

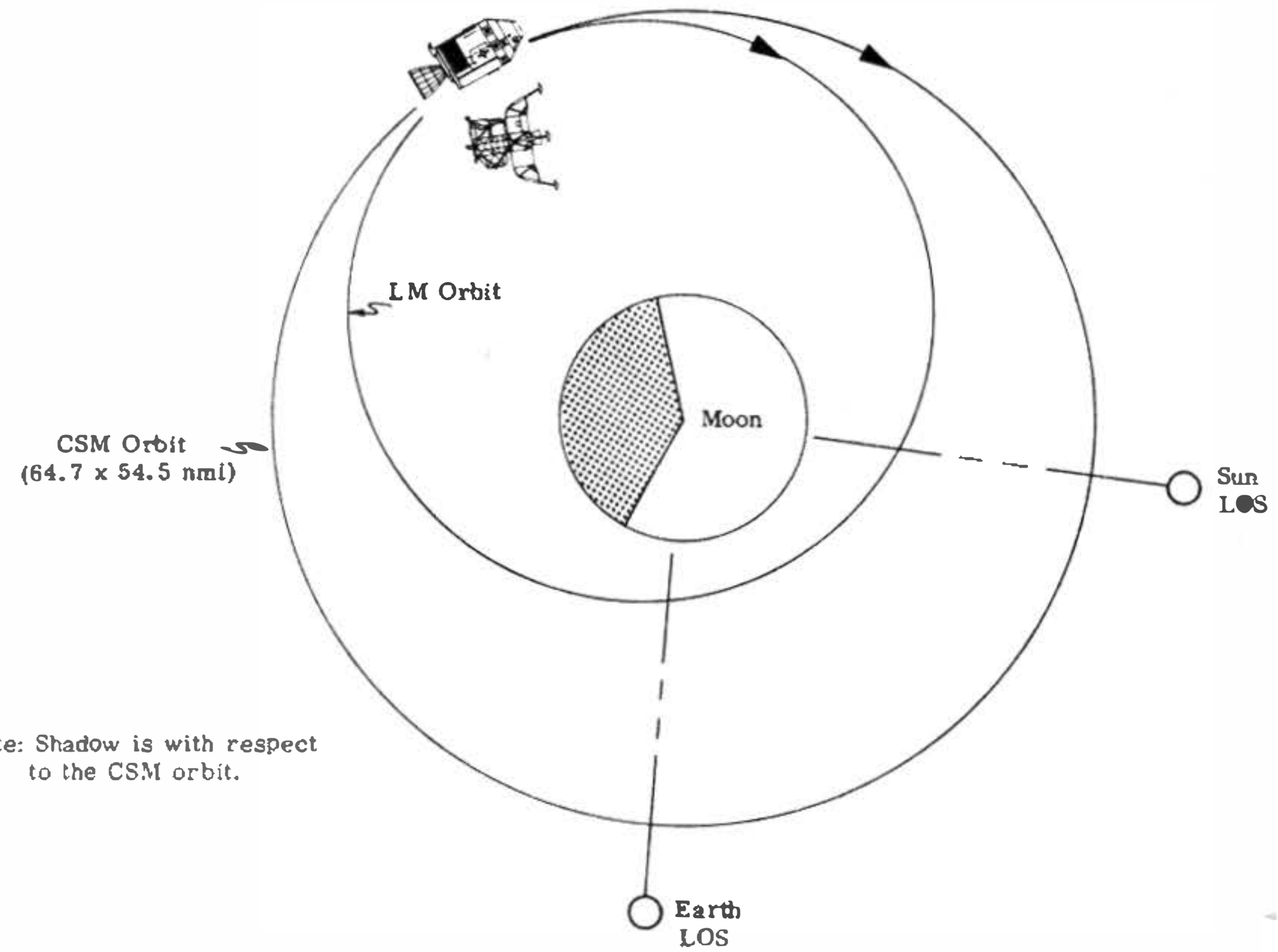

Note: Shadow is with respect to the CSM orbit.

NO PDI +12 ABORTPAD

+	0	0				Hours		N33	+	0	0				
+	0	0	0			Minutes	GETI	E	+	0	0	0			
+	0					Seconds			+	0					
						ΔV_X		N81							
						ΔV_Y	LV (ft/s)	F							
						ΔV_Z									
+						H_{Apogee}		N42	+						
						$H_{Perigee}$	(nmi)								
+						ΔV_R (ft/s)			+						
X	X	X				BT (min:s)			X	X	X				
X	X	X				R	FDAI Inertial		X	X	X				
X	X	X				P	Angles (degrees)		X	X	X				
+						Minutes	TIG (AGS)	373	+						
						ΔV_X		N86							
						ΔV_Y	AGS Targeting (ft/s)								
						ΔV_Z									
+	0	0				Hours		N11	+	0	0				
+	0	0	0			Minutes	TIG of CSI	G	+	0	0				
+	0					Seconds			+	0					
+	0	0				Hours		N37	+	0	0				
+	0	0	0			Minutes	TIG of TPI	H	+	0	0	0			
+	0					Seconds			+	0					

P63—BRAKING PHASE

V37 Enter, 63 Enter

V06 N61 Flashing

TG, TF1, crossrange (min/s, min/s, 0.1 nmi)

N33 Enter

V06 N33 Time of Ignition (h, min, s)

V50 N18 Roll, Pitch, Yaw, FDAI angles (0.01°)

V50 N25 Flashing

R1: 0 0 5 0 0 (position LR to Position 1)

V50 N25 Flashing

R1: 0 0 2 0 3 (switch Guidance Control to PGNS, Mode to Auto, Thrust Control to Auto)

V06 N62 Flashing

inertial velocity, time from ignition, ΔV (accumulated) (0.1 ft/s, min/s, 0.1 ft/s)

V99 N62 Flashing

Engine on Enable Request

V06 N63 Flashing

ΔAltitude (+LR > LGC), HDOT, H (ft, 0.1 ft/s, ft)

+	0	0				Hours			N33	+	0	0			
+	0	0	0			Minutes	TIG for PDI			+	0	0	0		
+	0					Seconds			I	+	0				
X	X					min:s	TGO		N61	X	X				
						nmi	Crossrange								
X	X	X				Roll	FOAI inertial angles at PDI (deg)		N18	X	X	X			
X	X	X				Pitch				X	X	X			
X	X	X				Yaw				X	X	X			
						231 Landing Site Radius (AGS) if RQD.									

NOTES:

{1 < PDI ≤ 6} ABORT PAD

			:				Log Insertion GET (h:min:s)
	+	1	0	0	0	0	
			:				Boost GET (h:min:s)
	+	1	0	0	0	0	
			:				HAM. GET (h:min:s)
	+	1	0	0	0	0	
			:				CSI. GET (h:min:s)

+	0	0				Hours	TIG	N37	+	0	0			
+	0	0	0			Minutes	of		+	0	0	0		
+	0					Seconds	TPI	J	+	0				

T1 (6 < PDI ≤ 15) ABORT PAD

							Log Insertion GET (h:min:s)
		+	5	5	0	0	
							TIG of CSI (h:min:s)

+	0	0				Hours	TIG	N37	+	0	0			
+	0	0	0			Minutes	of		+	0	0	0		
+	0					Seconds	TPI	K	+	0				

T2 (PDI + 21:26) ABORT PAD

							Log Insertion GET (h:min:s)
		+	5	0	0	0	
							Boost GET (h:min:s)
	+	1	0	0	0	0	
							HAM. GET (h:min:s)
		+	5	0	0	0	
							CSI. GET (h:min:s)

+	0	0				Hours	TIG	N33	+	0	0			
+	0	0	0			Minutes			+	0	0	0		
+	0					Seconds		L	+	0				
+	0	0				Hours		N37	+	0	0			
+	0	0	0			Minutes	TIG of TPI		+	0	0	0		
+	0					Seconds		M	+	0				

T3 (1 REV) ABORT PAD

							Log Insertion GET (h : min : s)
		+	5	0	0	0	
							CSI TIG (h : min : s)
	+	1	3	3	0	0	
							TPI TIG (h : min : s)

+	0	0				Hours		N33	+	0	0			
+	0	0	0			Minutes	TIG		+	0	0	0		
+	0					Seconds		N	+	0				

P24 – LANDMARK TRACKING

CSM Landmark Tracking Profile

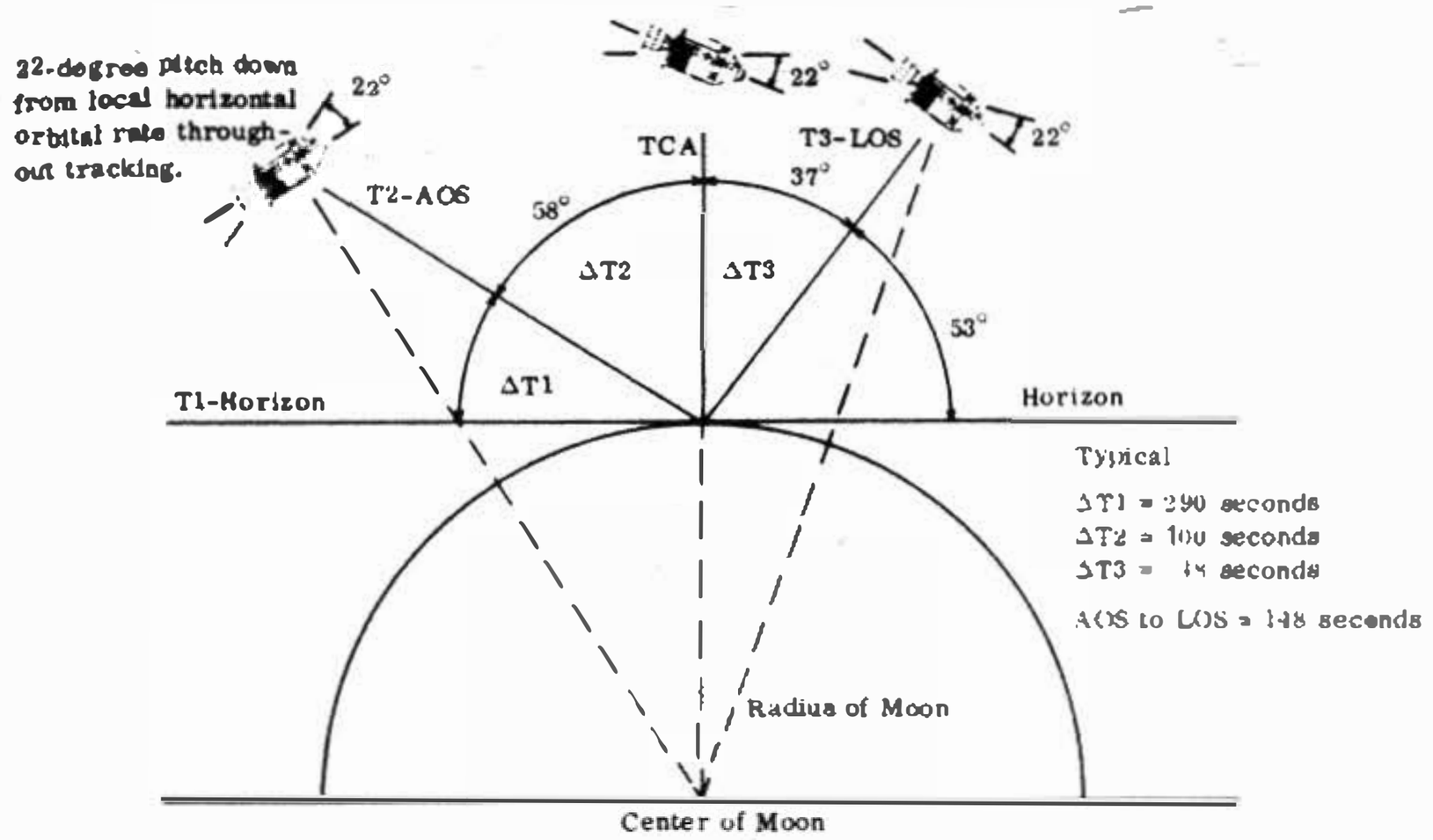

TGT: ( )

T_1 _ _ _:_ _:_ _

T_2 _ _ _:_ _:_ _

TCA _ _ _:_ _:_ _

T_3 _ _ _:_ _:_ _

R _ _ _° P _ _ _° Y _ _ _° (T2 ACQ)

N or S nmi _ _ / SA _ _ TA _ _ (T2 ACQ)

N89 LAT _ _._ _ _

LONG/2 _ _._ _ _

ALT _ _ _._ _

TGT: ( )

T_1 _ _ _:_ _:_ _

T_2 _ _ _:_ _:_ _

TCA _ _ _:_ _:_ _

T_3 _ _ _:_ _:_ _

R _ _ _° P _ _ _° Y _ _ _° (T2 ACQ)

N or S nmi _ _ / SA _ _ TA _ _ (T2 ACQ)

N89 LAT _ _.__ _ _

LONG/2 _ _.__ _ _

ALT _ _ _.__ _

P24 RATE-AIDED OPTICS TRACKING

CMC - on (req)
ISS - on and aligned
S S - on
BMAG MODE (3) - RATE 2
G&N PWR OPTICS - on
OPT ZERO - ZERO (verify)
OPT MODE - CMC

V37E 24E

F 06 89 LAT, LONG/2, ALT (0.001°, 0.001°, 0.01 nmi)
LOAD LMK COORDS
OPT ZERO - OFF
PRO

06 92 AUTO OPT SHF/TRUN (0.01°, 0.001°)
- F 05 09 00404 (TRUN > 90°)
- MNVR to acquire
- PRO
- or V34E, F 37

OPTICS MODE - MAN

F 51 MARK REQUEST
MARK (as often as desired)
To terminate:
PRO

F 37 XXE
OPT ZERO - ZERO

P24 – LANDMARK TRACKING

MARK DATA

+	0	0				Hours		+	0	0			
+	0	0	0			Minutes	GET	+	0	0	0		
+	0					Seconds		+	0				
						P							
						Y	IMU Gimbal Angles (degree)						
						R							
+						Shaft	SXT Angles	+					
+						Trunnion	(degree)	+					

+	0	0				Hours		+	0	0			
+	0	0	0			Minutes	GET	+	0	0	0		
+	0					Seconds		+	0				
						P							
						Y	IMU Gimbal Angles (degree)						
						R							
+						Shaft	SXT Angles	+					
+						Trunnion	(degree)	+					

+	0	0				Hours		+	0	0			
+	0	0	0			Minutes	GET	+	0	0	0		
+	0					Seconds		+	0				
						P							
						Y	IMU Gimbal Angles (degree)						
						R							
+						Shaft	SXT Angles	+					
+						Trunnion	(degree)	+					

NOTES:

BASIC REFERENCE COORDINATES AND REFSMMAT

The Basic Reference Coordinate system (BRC) is an orthogonal inertial coordinate system whose origin is located either at the earth or moon center of mass (Figure 1). The orientation of this coordinate system is defined by the line of intersection of the mean earth equatorial plane and the mean ecliptic at the beginning of the Besselian year which starts January 1.010, 1971. The X axis ($\underline{u}_{XI}$) is defined by the intersection of the earth's equatorial plane and the ecliptic in the direction of the ascending node. The Z axis ($\underline{u}_{ZI}$) is along the mean earth north pole, and Y axis ($\underline{u}_{YI}$) completes the right-handed triad.

This coordinate system is shifted from earth-centered to moon-centered when estimated vehicle position from the moon falls below 64,373,760 meters. It is likewise shifted from the moon back to the earth when the spacecraft position exceeds 64,373,760 meters. All navigation stars, lunar-solar ephemerides and vehicle state vectors are referenced to this system (Figure 2).

REFSMMAT. The matrix used to transform the elements of a vector given in BRC space to IMU space is known as REFSMMAT.

Eight REFSMMAT's or IMU alignments are utilized during this mission. Each is a unique matrix which locates a stable member axis ($\underline{u}_{XSM}$, $\underline{u}_{YSM}$, or $\underline{u}_{ZSM}$) in BRC space (Figure 3).

IMU REALIGNMENT. Any desired IMU orientation with respect to the BRC system and its associated REFSMMAT can be obtained from star sightings (Program P52).

The procedure generally used to change the alignment of the IMU from one of the five primary attitudes to another is as follows:

- The astronaut executes Program P52, Option 3. This realigns the IMU to the present inertial attitude thereby eliminating the effects of gyro drift.
- The astronaut executes Program P52, Option 1. The REFSMMAT for Option 1 is generally uplinked prior to entering P52. When executed, the program computes and displays the IMU gimbal angles for the desired IMU attitude using the present vehicle attitude.

A total of four options are available to the crew when executing P52 (Figure 4). The basic difference between options is the manner in which REFSMMAT is obtained. The basic orthogonalization procedure used to compute REFSMMAT is shown in Figure 5.

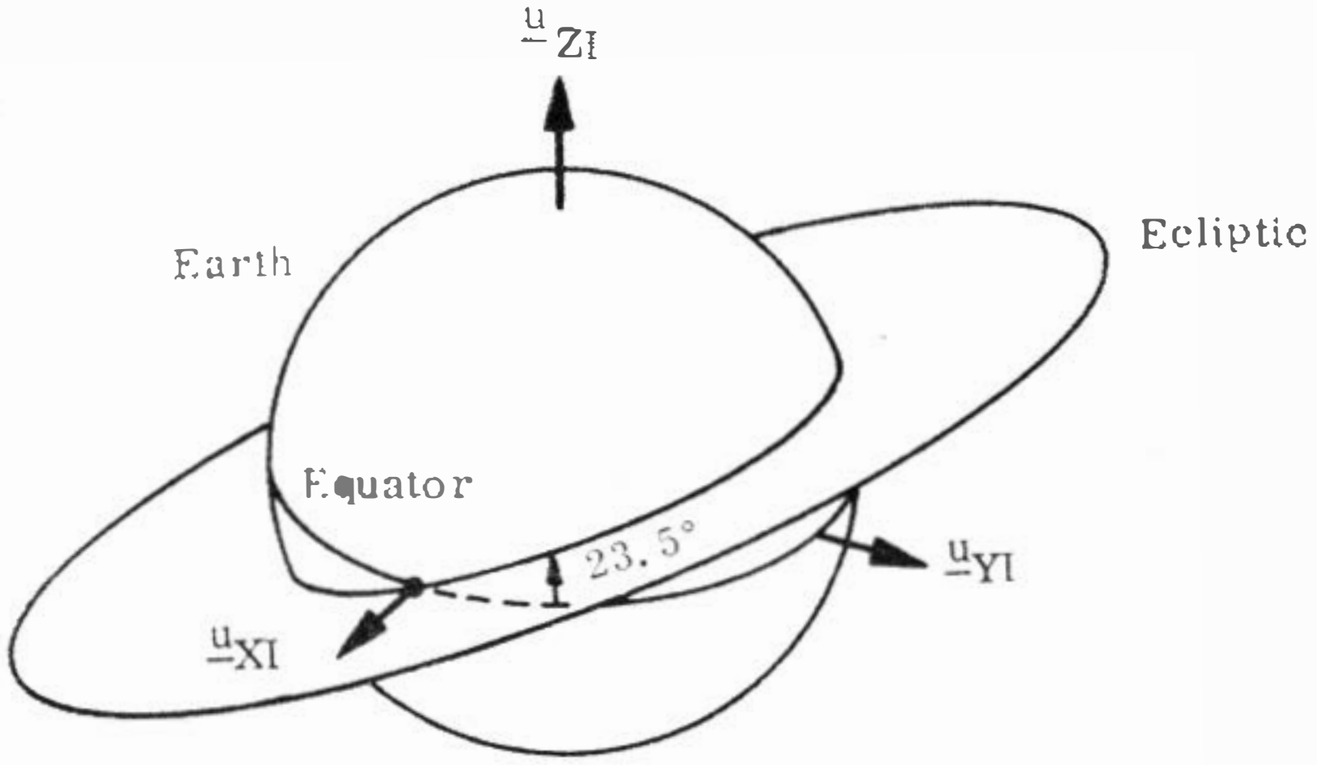

$\underline{u}_{XI}$ = Mean Equinox of Date*

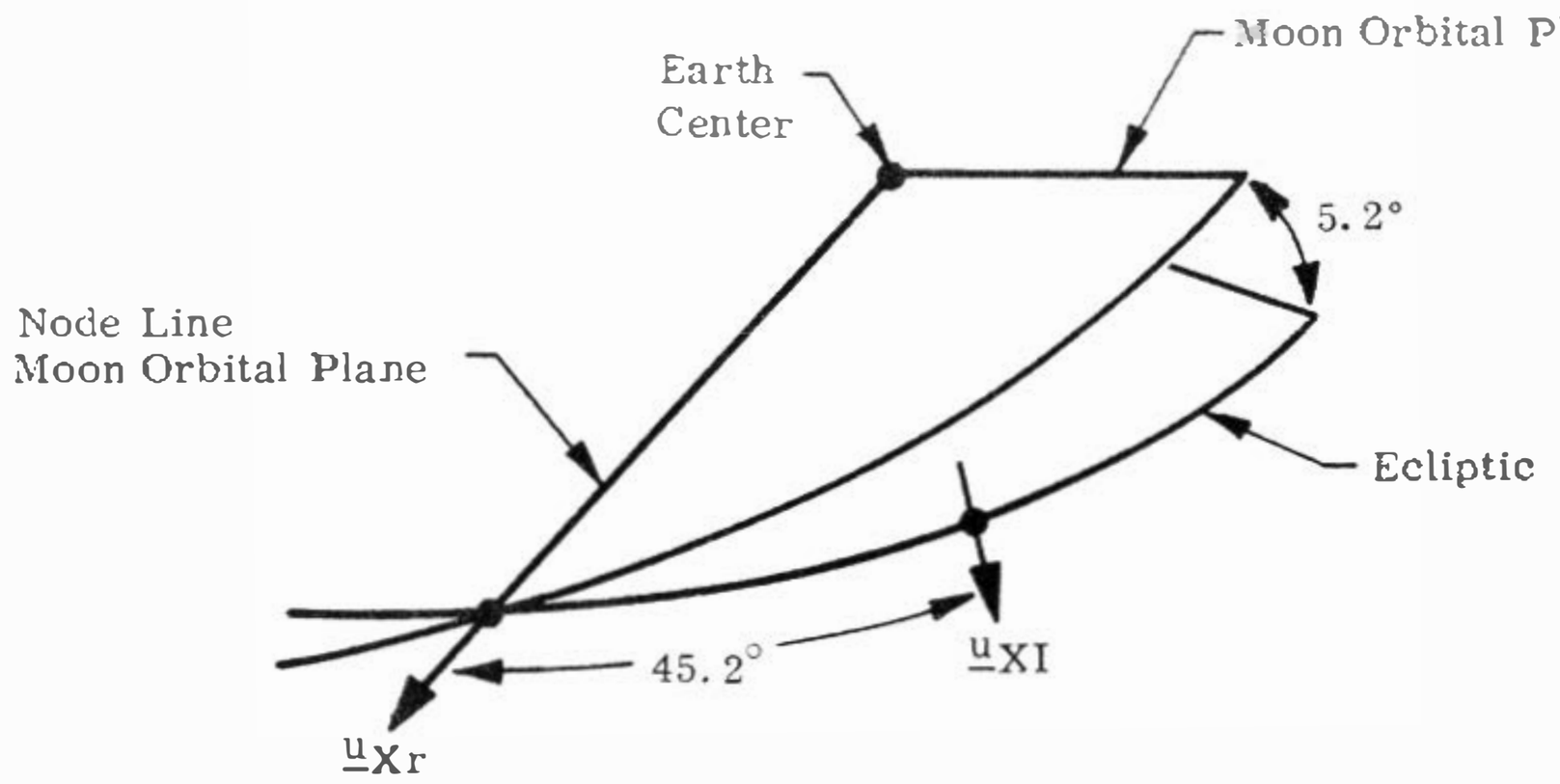

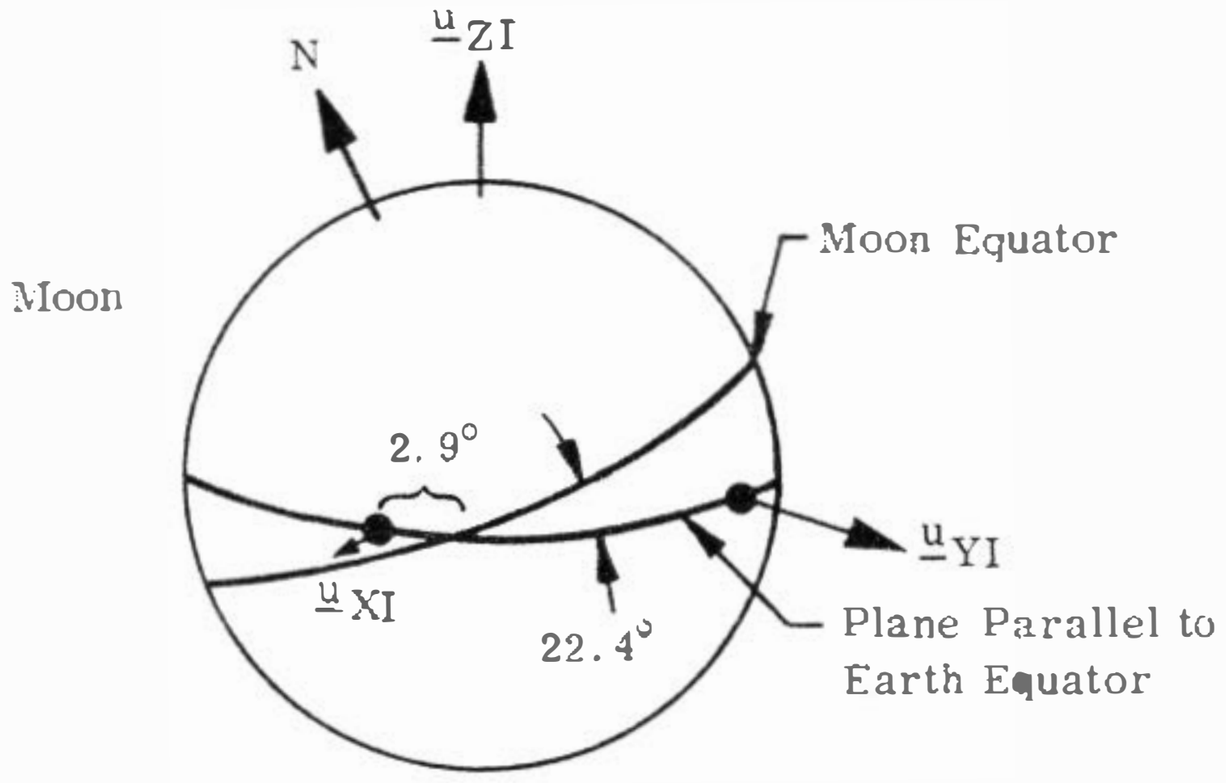

* Besselian year starting January 1.2516251, 1972

Figure 1. Basic Reference Coordinate System

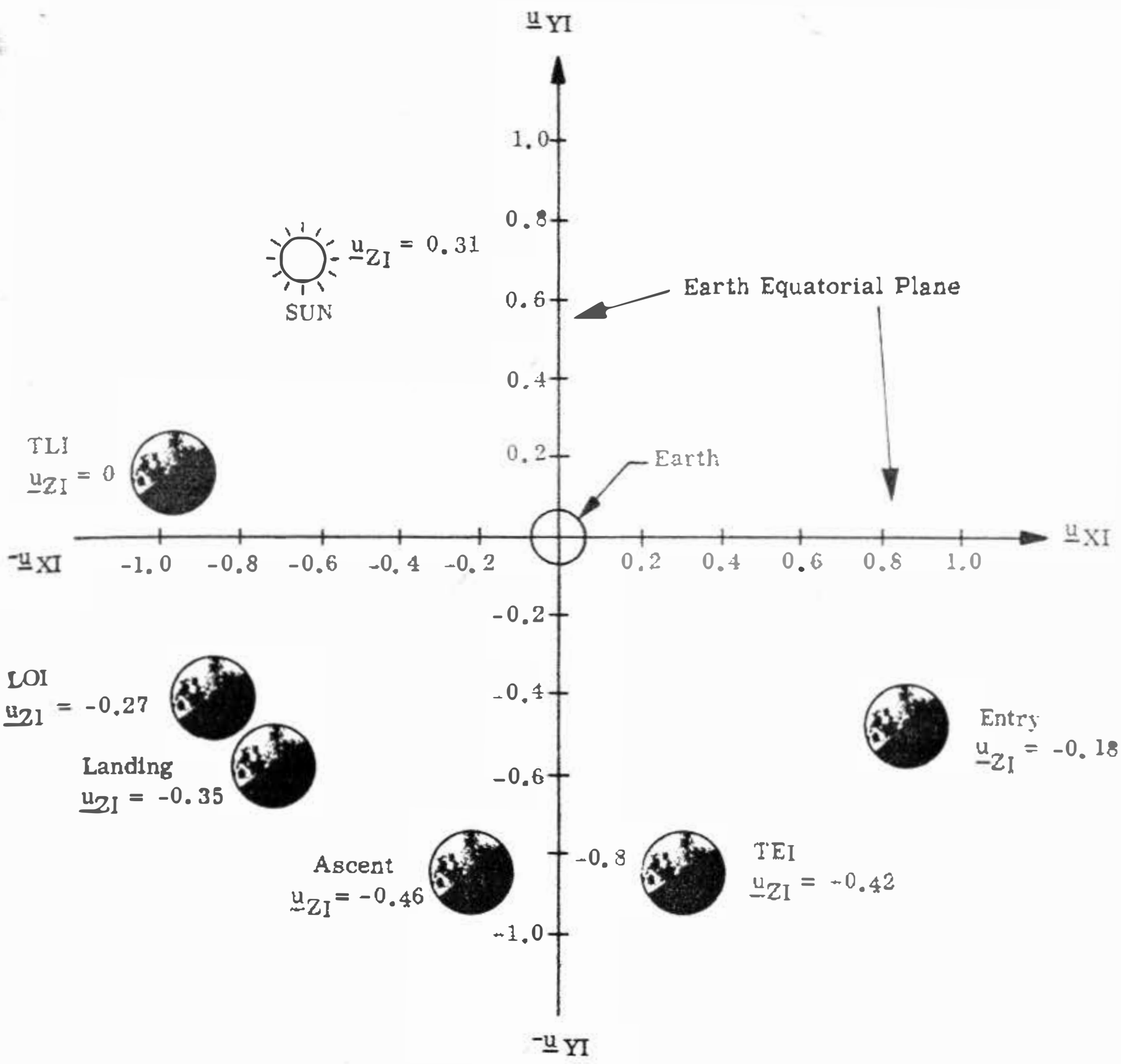

Figure 2. Basic Reference Coordinate System

LAUNCH PAD REFSMMAT

1. Launch
2. TLI
3. T & D

$$\begin{bmatrix} X \\ Y \\ Z \end{bmatrix}_{\substack{\text{Spacecraft} \\ \text{Platform} \\ \text{Stable} \\ \text{Members}}} = \begin{bmatrix} XIX & XIY & XIZ \\ YIX & YIY & YIZ \\ ZIX & ZIY & ZIZ \end{bmatrix} \begin{bmatrix} X \\ Y \\ Z \end{bmatrix}_{\text{ECI (MNBY)}}$$

XIX = -0.93615136 XIY = 0.31765305 XIZ = 0.15072214

YIX = 0.030764652 YIY = 0.50103907 YIZ = -0.86487766

ZIX = -0.35024871 ZIY = -0.80501950 ZIZ = -0.47882089

PTC REFSMMAT

1. MCC-1
2. MCC-2
3. Passive Thermal Control
4. MCC-3
5. MCC-4
6. SIM Bay Door Jettison
7. MCC-5
8. MCC-6

XIX = 0.93969262 XIY = 0.31378939 XIZ = 0.13606614

YIX = 0.34202014 YIY = -0.86212926 YIZ = -0.37383864

ZIX = 0.0 ZIY = 0.39783077 ZIZ = -0.91745881

Figure 3 (Sheet 1 of 3). Mission REFSMMAT's

PREFERRED (LOI) REFSMMAT

1. LOI

$$\begin{bmatrix} X \\ Y \\ Z \end{bmatrix}_{\substack{\text{Spacecraft} \\ \text{Platform} \\ \text{Stable} \\ \text{Members}}} = \begin{bmatrix} XIX & XIY & XIZ \\ YIX & YIY & YIZ \\ ZIX & ZIY & ZIZ \end{bmatrix} \begin{bmatrix} X \\ Y \\ Z \end{bmatrix}_{\substack{\text{ECI (MNBY) or} \\ \text{MCI (MNBY)}}}$$

XIX = 0.48089333 XIY = -0.41515140 XIZ = -0.77226350

YIX = 0.019274318 YIY = -0.87557755 YIZ = 0.48269293

ZIX = -0.87656721 ZIY = -0.24700866 ZIZ = -0.41305764

LANDING SITE REFSMMAT

1. DOI
2. CSM Separation
3. CSM Circularization
4. LM Powered Descent
5. Subsatellite Jettison

XIX = 0.58256124 XIY = 0.47618509 XIZ = 0.65868822

YIX = -0.25065581 YIY = -0.66565295 YIZ = 0.70290671

ZIX = 0.77317145 ZIY = -0.57459023 ZIZ = -0.26842505

PREFERRED (LOPC) REFSMMAT

1. LOPC

XIX = -0.25509020 XIY = -0.66899247 XIZ = 0.69812468

YIX = -0.038763394 YIY = -0.71435482 YIZ = -0.69870923

ZIX = 0.96613994 ZIY = -0.20529556 ZIZ = 0.15619250

Figure 3 (Sheet 2 of 3). Mission REFSMMAT's

LM ASCENT REFSMMAT

1. LM Ascent
2. TPI
3. CSM Separation following LM Jettison
4. LM Deorbit

$$\begin{bmatrix} X \\ Y \\ Z \end{bmatrix}_{\substack{\text{Spacecraft} \\ \text{Platform} \\ \text{Stable} \\ \text{Members}}} = \begin{bmatrix} XIX & XIY & XIZ \\ YIX & YIY & YIZ \\ ZIX & ZIY & ZIZ \end{bmatrix} \begin{bmatrix} X \\ Y \\ Z \end{bmatrix}_{\text{ECI (MNBY) or MCI (MNBY)}}$$

XIX = 0.055099073 XIY = 0.66312594 XIZ = 0.74647713

YIX = -0.22872524 YIY = -0.71935067 YIZ = 0.65591112

ZIX = 0.97193049 ZIY = -0.20687825 ZIZ = 0.11203809

PREFERRED (TEI) REFSMMAT

1. TEI

XIX = -0.76029649 XIY = -0.043428479 XIZ = -0.64812285

YIX = 0.38932093 YIY = 0.76823375 YIZ = -0.50817920

ZIX = 0.51997930 ZIY = -0.63869464 ZIZ = -0.56717782

ENTRY REFSMMAT

1. MCC-7
2. Entry

XIX = -0.79310282 XIY = -0.13441632 XIZ = 0.59407084

YIX = -0.60877234 YIY = 0.20632025 YIZ = -0.76604711

ZIX = -0.019599619 ZIY = -0.96920805 ZIZ = -0.24546211

Figure 3 (Sheet 3 of 3). Mission REFSMMAT's

OPTION: 00001 (PREFERRED)

DESCRIPTION: Preferred Thrusting Illustrated

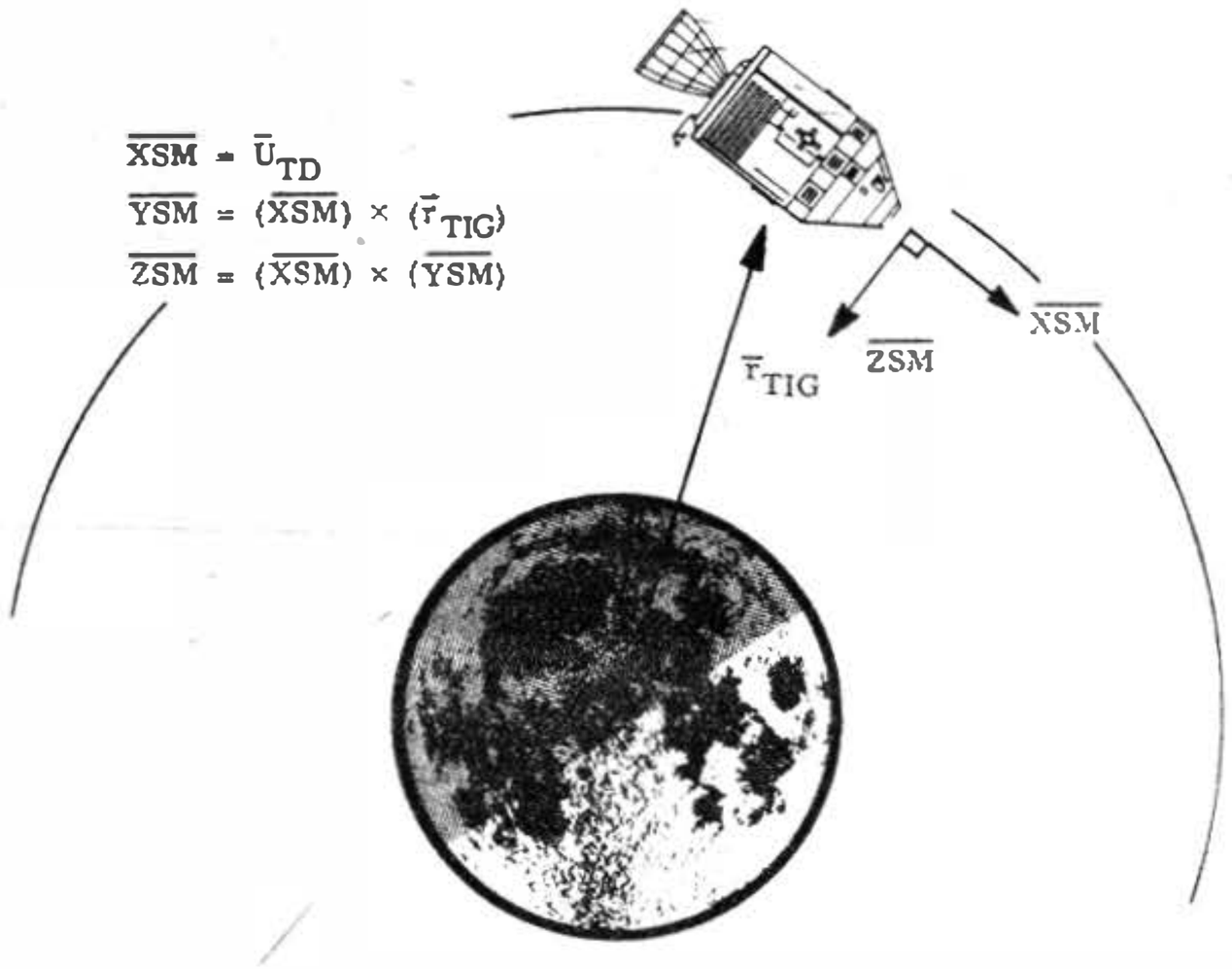

The PREFERRED option refers to one of two possibilities:

a. The PREFERRED thrusting orientation which is calculated and stored by P40 and P41.

b. Any orientation uplinked by MSFN via P27.

The CMC is unable to distinguish between a and b. Whenever a PREFERRED orientation has been computed by P40 or P41 and stored, or uplinked by MSFN via P27, the PREFERRED ATTITUDE flag is set. This flag indicates to the CMC that a usable platform orientation has been stored in the locations allotted to PREFERRED ATTITUDE. The PREFERRED ATTITUDE flag being reset indicates the information in the PREFERRED ATTITUDE locations is unusable. The PREFERRED ATTITUDE flag is reset by P40 and P41 at TIG - 30 seconds.

CALCULATION OF ORIENTATION:

$$\begin{bmatrix} \text{PREFERRED} \\ \text{REFSMMAT} \\ \text{(Thrusting)} \end{bmatrix} = \begin{bmatrix} X_{SM} \\ Y_{SM} \\ Z_{SM} \end{bmatrix} = \begin{bmatrix} \bar{U}_{TD} \\ \text{Unit } (\bar{U}_{TD} \times \bar{r}_{TIG}) \\ \text{Unit } (\bar{U}_{TD} \times (\bar{U}_{TD} \times (\bar{r}_{TIG})) \end{bmatrix}$$

where

$\bar{U}_{TD}$ is a unit vector in the desired thrust direction expressed in the basic reference system.

$\bar{r}_{TIG}$ is the position vector of the vehicle at ignition expressed in the basic reference system.

Figure 4 (Sheet 1 of 3)

OPTION: 00002 (NOMINAL)

DESCRIPTION: LOCAL VERTICAL

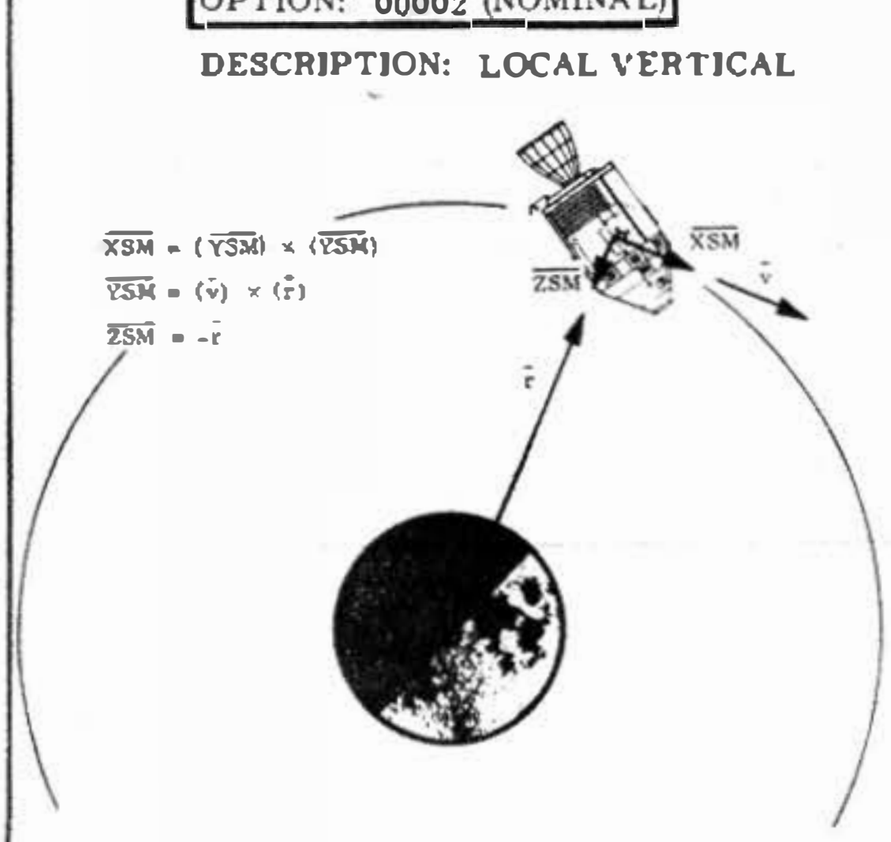

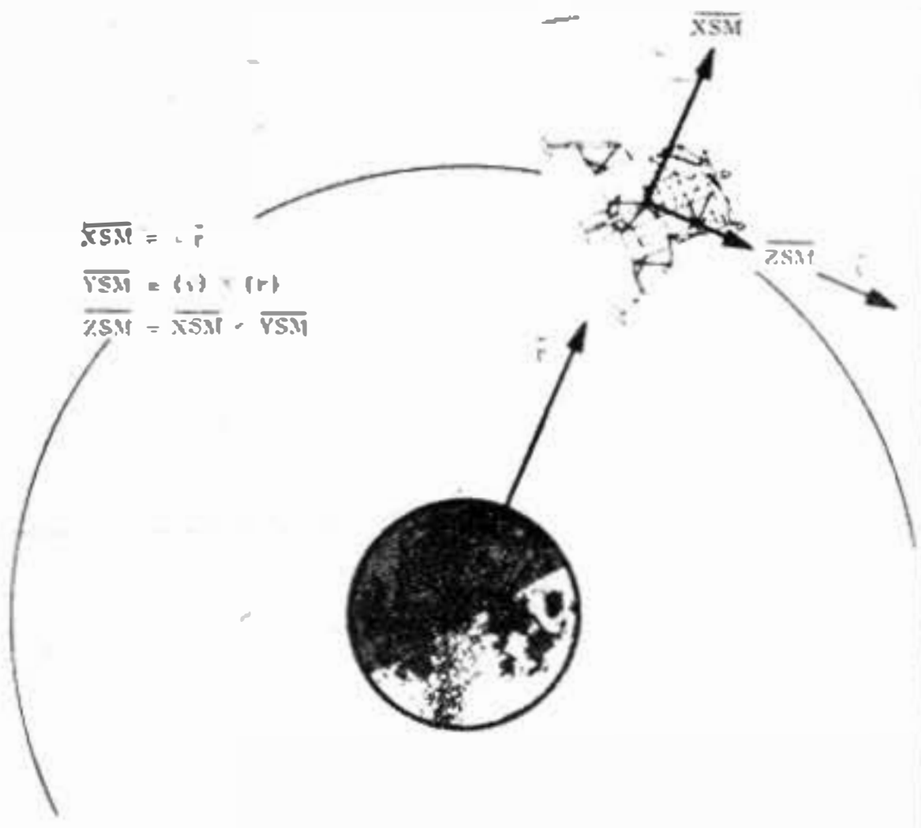

The CMC requests the g. e. t. for which the vehicle $\bar{r}$ and $\bar{v}$ are to be selected to define the NOMINAL orientation.

CALCULATION OF ORIENTATION:

$$\begin{matrix} & & \text{CSM} & & \text{LM} \\ \left[\begin{matrix}\text{Nominal} \\ \text{REFSMMAT}\end{matrix}\right] & = & \begin{bmatrix} X_{SM} \\ Y_{SM} \\ Z_{SM} \end{bmatrix} & = & \begin{bmatrix} \underline{Y}_{SM} \times \underline{Z}_{SM} \\ \text{Unit } (\bar{v} \times \bar{r}) \\ \text{Unit } (-\bar{r}) \end{bmatrix} & = & \begin{bmatrix} \text{Unit } (\bar{r}) \\ \text{Unit } (\bar{v} \times \bar{r}) \\ \underline{X}_{SM} \times \underline{Y}_{SM} \end{bmatrix} \end{matrix}$$

where

r, v are position and velocity vectors of vehicle at the time specified.

OPTION: 00003 (REFSMMAT)

DESCRIPTION:

This option is used for gyro drift determination. This option realigns the platform to the platform orientation currently maintained in the CMC. The actual platform orientation differs from the CMC maintained orientation due to gyro drift.

$$\left[\text{REFSMMAT}\right] = \begin{bmatrix} X_{SM} \\ Y_{SM} \\ Z_{SM} \end{bmatrix} = \begin{bmatrix} \text{Currently maintained} \\ \text{CMC platform} \\ \text{Orientation} \end{bmatrix}$$

Figure 4 (Sheet 2 of 3)

OPTION: 00004 (LANDING SITE)

DESCRIPTION:

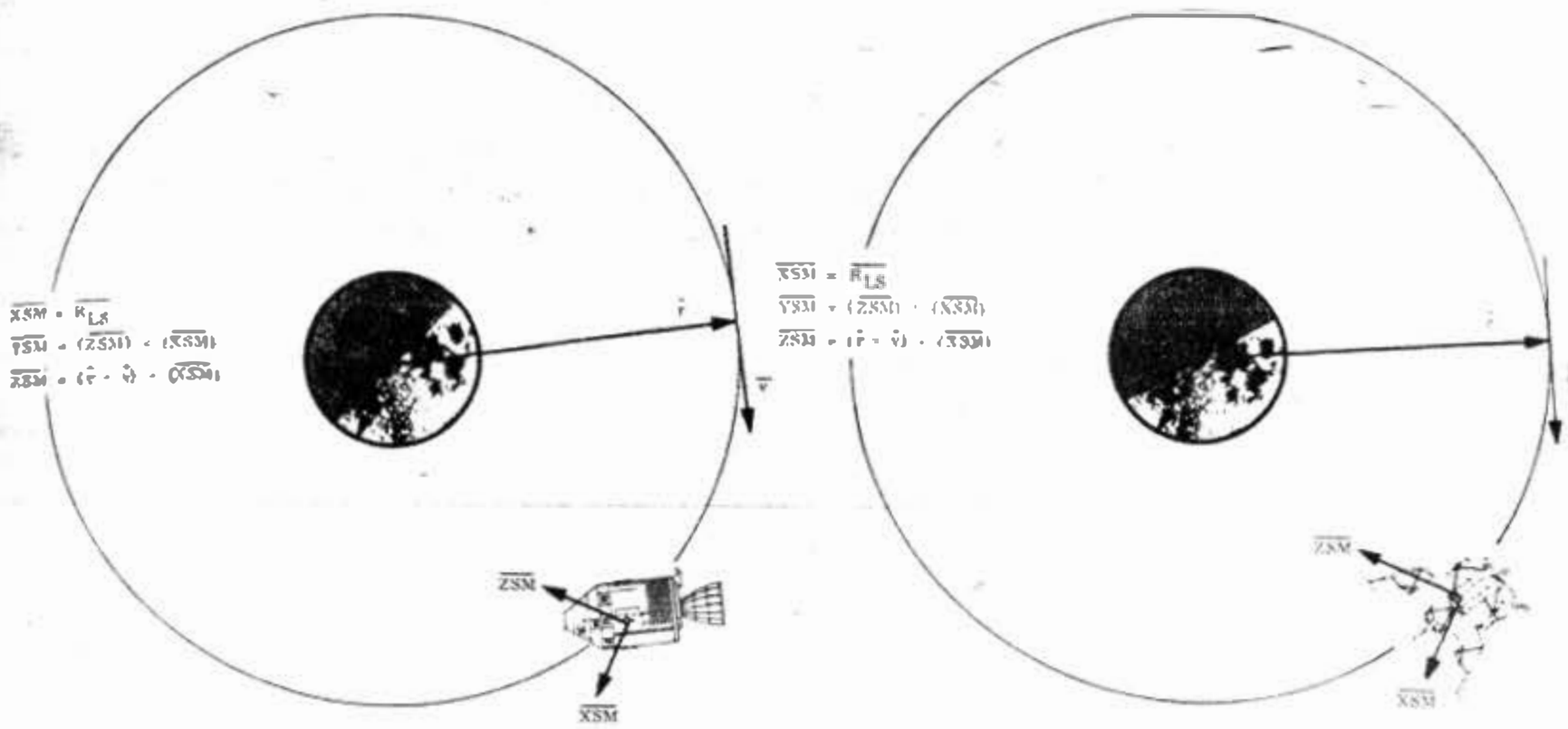

The latitude, longitude/2, and altitude above the mean lunar radius of the landing site must be entered to determine $\overline{R}_{LS}$. The g.e.t. for which the CSM $\bar{r}$ and $\bar{v}$ are to be selected must also be entered.

$$\begin{bmatrix}\text{Landing Site} \\ \text{REFSMMAT}\end{bmatrix} = \begin{bmatrix}X_{SM} \\ Y_{SM} \\ Z_{SM}\end{bmatrix} = \begin{bmatrix}\text{Unit } (\bar{R}_{LS}) \\ \bar{Z}_{SM} \times \bar{X}_{SM} \\ \text{Unit } [(\bar{r} \times \bar{v}) \times \bar{X}_{SM}]\end{bmatrix}$$

where

$\bar{R}_{LS}$ is the landing site position vector, defined by the latitude, longitude, and altitude, specified in the basic reference system,

$\bar{r}$ and $\bar{v}$ are the CSM position and velocity vectors at the time specified.

PROCEDURE FOR SPECIFYING OPTIONS

a. When P52 is entered, the CMC checks the PREFERRED ATTITUDE flag.
b. If the flag is set, the DSKY flashes Verb 04, Noun 06, R2 = 00001, indicating the PREFERRED option may be selected.
c. If the flag is not set, the DSKY flashes Verb 04, Noun 06, R2 = 00003, indicating the PREFERRED option may not be selected.
d. The desired option is loaded into R2 via Verb 22.

Figure 4 (Sheet 3 of 3)

P51/P52 IMU ALIGNMENT

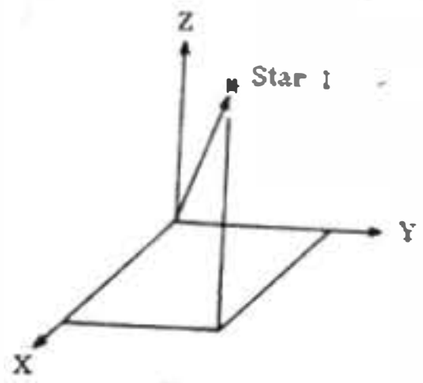

$$\underline{U}_{S1} = \begin{bmatrix} X_1 \\ Y_1 \\ Z_1 \end{bmatrix}_{ECI}$$

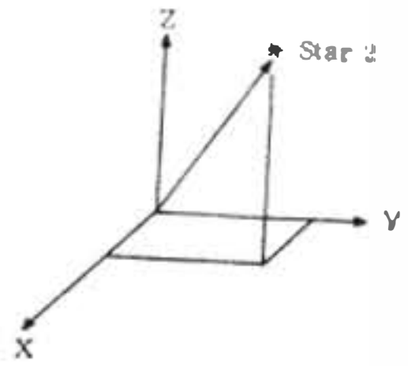

$$\underline{U}_{S2} = \begin{bmatrix} X_2 \\ Y_2 \\ Z_2 \end{bmatrix}_{ECI}$$

$\underline{U}_{S1}$ and $\underline{U}_{S2}$ are known unit vectors in ECI space of the stars and are stored in the AGC.

$$\underline{U}_{S1M} = \begin{bmatrix} X_{1M} \\ Y_{1M} \\ Z_{1M} \end{bmatrix}_{SM} \qquad \underline{U}_{S2M} = \begin{bmatrix} X_{2M} \\ Y_{2M} \\ Z_{2M} \end{bmatrix}_{SM}$$

$$\underline{U}_{SiM} = \begin{bmatrix} X_{iM} \\ Y_{iM} \\ Z_{iM} \end{bmatrix}_{i = 1 \text{ or } 2} = [\,AI\,]\,[\,AM\,]\,[\,AO\,]\,[\,32^{\circ}\,] \begin{bmatrix} \text{Cos AS Sin AT} \\ \text{Sin AS Sin AT} \\ \text{Cos AT} \end{bmatrix}$$

AI, AM, AO are inner, middle, and outer gimbal angles at i th mark time. AS and AT are SXT LOS shaft and trunnion at i th mark time.

$\underline{U}_{S1M}$ and $\underline{U}_{S2M}$ are the measured unit vectors (optics mark) in stable member (SM) space of the stars.

$$[\,S_A\,] = \begin{bmatrix} \underline{U}_{S1} \\ (\underline{U}_{S1} \times \underline{U}_{S2}) \times \underline{U}_{S1} \\ \underline{U}_{S1} \times \underline{U}_{S2} \end{bmatrix} \quad [\,ECI\,] \qquad [\,S_B\,] = \begin{bmatrix} \underline{U}_{S1M} \\ (\underline{U}_{S1M} \times \underline{U}_{S2M}) \times \underline{U}_{S1M} \\ \underline{U}_{S1M} \times \underline{U}_{S2M} \end{bmatrix} \quad [\,SM\,]$$

$$[\,S_A\,] = [\,A\,]\,[\,ECI\,] \qquad [\,S_B\,] = [\,B\,]\,[\,SM\,]$$

$$[\,S_A\,] = [\,S_B\,]$$

$$[\,A\,]\,[\,ECI\,] = [\,B\,]\,[\,SM\,]$$

$$[\,SM\,] = [\,B\,]^{-1}\,[\,A\,]\,[\,ECI\,]$$

$$[\,REFSMMAT\,] = [\,B\,]^{-1}\,[\,A\,]$$

NOTE: For P52, $\underline{U}_{S1}$ and $\underline{U}_{S2}$ are first transformed to SM space using the desired REFSMMAT. $[B]^{-1}[A]$ is then a characterization of realignment gyro torquing angles.

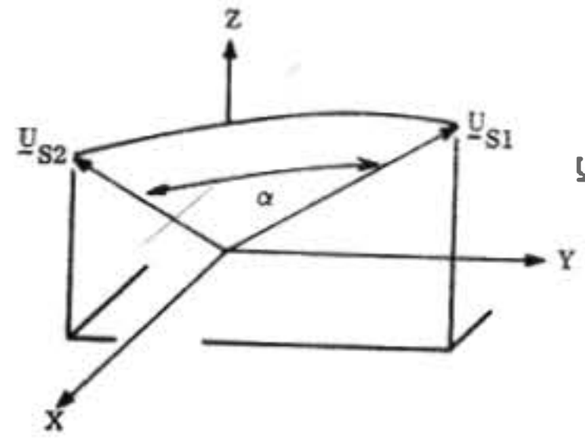

$$\alpha = \cos^{-1}(\underline{U}_{S1} \cdot \underline{U}_{S2})$$

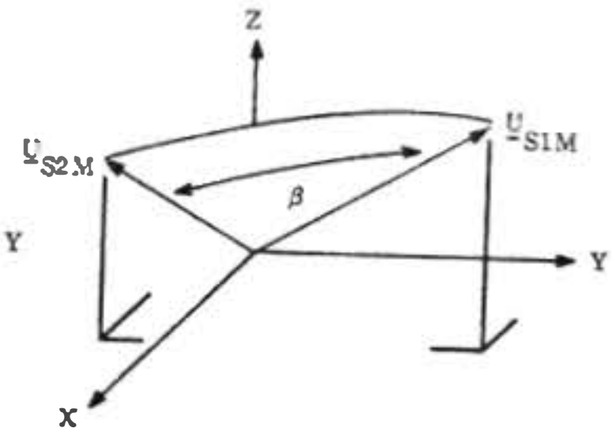

$$\beta = \cos^{-1}(\underline{U}_{S1M} \cdot \underline{U}_{S2M})$$

Star Angle Difference = $\alpha - \beta$

Figure 5. REFSMMAT Computations

J-1 MISSION REFSMMAT SUMMARY, 26 JULY LAUNCH

Applicable maneuvers	REFSMMAT	Alinement criteria (IMU axis)	Remarks
Launch	"Launch Pad"	X-axis along flig t azimuth at launch Z-axis along negative radius vector Y-axis completes right-hand system	At earth launch the FDAI vill display: Roll = 90+ flight azimuth Pitch = 90 Yaw = 0
MCC-1 MCC-2 MCC-3 MCC-4	"PTC" (Passive Thermal Control) (CSM only)	X-axis in the ecliptic plane and perpendicular to the earth-moon line projection in the ecliptic plane at the average time of transearth injection for the monthly launch v ndov and azimuth range. Z-axis perpendicular to the ecliptic and directed south. Y-axis complete the right-hand system.	At the beginning of the Bar-B-Que mode, the spacecraft will maneu- to an FDAI display of: Roll = 0 Pitch = 90 Yaw = 0
LOI	Preferred (heads down CSM)	X-axis alined with the spacecraft X-body axis at the vehicle attitude for ignition with the thrust directed through the center of gravity. Z-axis in the plane formed by the X-axis and the position vector. Positive direction away from moon for a heads down attitude. Positive direction towards moon for heads-up attitude. Y-axis completes the right-hand system.	In a heads down orientation at bu n ignition, the CSM FDAI will display: Ro l = 0 Pitch = 0 Yaw = 0
DOI Circulari-zation PDI Landing	"Landing Site: (CSM and LM)	X-axis along poaitive luna radius vector at landing site at pr dicted landing time. Z-axis in direction of flight para lel to the CSM orbital pla e a d perpendicular to X. Y-axis completes the right-hand system.	At nominal touchdown, the LM FDAI will display: Roll = 0 Pitch = 0 Yaw = 0
CSM plane change	"Preferred" (CSM only) (beads up)	Same as above "preferred," alinement defioition.	At burn ignition, the FDAI will display: Roll = 0 Pitch = 0 Yaw = 0
LM ascent Rendezvous	"Liftoff" (CSM & LM)	X-axis along positive lunar radius vector at landing site at predicted liftoff time. Z-axis down range parallel to the CSM orbital plane and perpendicular to X. Y-axis completes the right-hand system.	At nominal liftoff time, the LM FDAI will display: Roll = 359 Pitch = 0 Yaw = 346
TEI	"Preferred" (heads down)	Same as above "Preferred", alinement definition.	In a heads down orientation at burn ignition, the FDAI will display: Roll = 0 Pitch = 0 Yaw = 0
MCC-5 MCC-6 MCC-7	"PTC" (CSM only)	Same as above "PTC" alinement.	Same as above "PTC" remarks.
Entry	"Entry" (CSM only)	X-axis is in local horizontal plane in the direction of flight at entry entry interface (400 000). Z-axis id down along negative radius at entry interface. Y-axis completes right-hand system.	At entry interface with wings level loca horizontal, heat shield forward, inplane, lift up, heads down, the FDAI will display: Roll = 0 Pitch = 180 Yaw = 0

P52 - IMU REALIGN (CM)

V37 Enter, 52 Enter

V04 N06 Flashing

R1: 0 0 0 0 t

R2: 0 0 0 0 X IMU Align Option

1 - Preferred, 2 - Nominal,
3 - REFSMMAT, 4 - Landing Site

V51 Flashing - Please Mark

X	0	0	0	0		P52 Option		X	0	0	0	0	
+	0	0				Hours		+	0	0			
+	0	0	0			Minutes } GET		+	0	0	0		
+	0					Seconds		+	0				
X	0	0	0			Celestial Body Code 1	N71	X	0	0	0		
X	0	0	0			Celestial Body Code 2	N71	X	0	0	0		
						Star Angle Difference (degrees)	N05						
						X	N93						
						Y } Gyro Torquing Angles (degrees)							
						Z							
						X							
						Y } Calculated Gyro Drift (meru)							
						Z							

X	0	0	0	0		P52 Option		X	0	0	0	0	
+	0	0				Hours		+	0	0			
+	0	0	0			Minutes } GET		+	0	0	0		
+	0					Seconds		+	0				
X	0	0	0			Celestial Body Code 1	N71	X	0	0	0		
X	0	0	0			Celestial Body Code 2	N71	X	0	0	0		
						Star Angle Difference (degrees)	N05						
						X	N93						
						Y } Gyro Torquing Angles (degrees)							
						Z							
						X							
						Y } Calculated Gyro Drift (meru)							
						Z							

NOTES:

P52–IMU REALIGN ICMI

V37 Enter, 52 Enter

V04 N06 Flashing

R1: 0 0 0 0 1

R2: 0 0 0 0 X IMU Align Option

1 – Preferred, 2 – Nominal,
3 – REFSMMAT, 4 – Landing Site

V51 Flashing – Please Mark

X	0	0	0	0		P52 Option		X	0	0	0	0	
+	0	0				Hours	GET	+	0	0			
+	0	0	0			Minutes	GET	+	0	0	0		
+	0					Seconds	GET	+	0				
X	0	0	0			Celestial Body Code 1	N71	X	0	0	0		
X	0	0	0			Celestial Body Code 2	N71	X	0	0	0		
						Star Angle Difference (degrees)	N05						
						X	N93						
						Y Gyro Torquing Angles (degrees)							
						Z							
						X							
						Y Calculated Gyro Drift (meru)							
						Z							

X	0	0	0	0		P52 Option		X	0	0	0	0	
+	0	0				Hours	GET	+	0	0			
+	0	0	0			Minutes	GET	+	0	0	0		
+	0					Seconds	GET	+	0				
X	0	0	0			Celestial Body Code 1	N71	X	0	0	0		
X	0	0	0			Celestial Body Code 2	N71	X	0	0	0		
						Star Angle Difference (degrees)	N05						
						X	N93						
						Y Gyro Torquing Angles (degrees)							
						Z							
						X							
						Y Calculated Gyro Drift (meru)							
						Z							

NOTES:

P52 –IMU REALIGN (CM)

V37 Enter, 52 Enter

V04 N06 Flashing

R1: 00001

R2: 0000X IMU Align Option

1 – Preferred, 2 – Nominal,
3 – REFSMMAT, 4 – Landing Site

V51 Flashing – PleaseMark

X	0	0	0	0		P52 Option		X	0	0	0	0
+	0	0				Hours	GET	+	0	0		
+	0	0	0			Minutes	GET	+	0	0	0	
+	0					Seconds	GET	+	0			
X	0	0	0			Celestial Body Code 1	N71	X	0	0	0	
X	0	0	0			Celestial Body Code 2	N71	X	0	0	0	
						Star Angle Difference (degrees)	N05					
						X	N93					
						Y	Gyro Torquing Angles (degrees)					
						Z	Gyro Torquing Angles (degrees)					
						X	Calculated Gyro Drift (meru)					
						Y	Calculated Gyro Drift (meru)					
						Z	Calculated Gyro Drift (meru)					

X	0	0	0	0		P52 Option		X	0	0	0	0
+	0	0				Hours	GET	+	0	0		
+	0	0	0			Minutes	GET	+	0	0	0	
+	0					Seconds	GET	+	0			
X	0	0	0			Celestial Body Code 1	N71	X	0	0	0	
X	0	0	0			Celestial Body Code 2	N71	X	0	0	0	
						Star Angle Difference (degrees)	N05					
						X	N93					
						Y	Gyro Torquing Angles (degrees)					
						Z	Gyro Torquing Angles (degrees)					
						X	Calculated Gyro Drift (meru)					
						Y	Calculated Gyro Drift (meru)					
						Z	Calculated Gyro Drift (meru)					

NOTES:

P52—IMU REALIGN (CM)

V37 Enter, 52 Enter

V04 N06 Flashing

R1: 00001

R2: 0000x IMU Align Option

1 — Preferred, 2 — Nominal,
3 — REFSMMAT, 4 — Landing Site

V51 Flashing — Please Mark

X	0	0	0	0		P52 Option		X	0	0	0	0	
+	0	0				Hours		+	0	0			
+	0	0	0			Minutes	GET	+	0	0	0		
+	0					Seconds		+	0				
X	0	0	0			Celestial Body Code 1	N71	X	0	0	0		
X	0	0	0			Celestial Body Code 2	N71	X	0	0	0		
						Star Angle Difference (degrees)	N05						
						X	N93						
						Y — Gyro Torquing Angles (degrees)							
						Z							
						X							
						Y — Calculated Gyro Drift (meru)							
						Z							

X	0	0	0	0		P52 Option		X	0	0	0	0	
+	0	0				Hours		+	0	0			
+	0	0	0			Minutes	GET	+	0	0	0		
+	0					Seconds		+	0				
X	0	0	0			Celestial Body Code 1	N71	X	0	0	0		
X	0	0	0			Celestial Body Code 2	N71	X	0	0	0		
						Star Angle Difference (degrees)	N05						
						X	N93						
						Y — Gyro Torquing Angles (degrees)							
						Z							
						X							
						Y — Calculated Gyro Drift (meru)							
						Z							

NOTES:

P52 - IMU REALIGN (CM)

V37 Enter, 52 Enter

V04 N06 Flashing

R1 00001

R2 0 0 0 0 x IMU Align Option

1 = Preferred, 2 = Nominal,
3 = REFSMMAT, 4 = Landing Site

V51 Flashing Please Mark

X	0	0	0	0		P52 Option		X	0	0	0	0	
+	0	0				Hours	GET	+	0	0			
+	0	0	0			Minutes	GET	+	0	0	0		
+	0					Seconds	GET	+	0				
X	0	0	0			Celestial Body Code 1	N71	X	0	0	0		
X	0	0	0			Celestial Body Code 2	N71	X	0	0	0		
						Star Angle Difference (degrees)	N05						
						X	N93						
						Y Gyro Torquing Angles (degrees)							
						Z							
						X							
						Y Calculated Gyro Drift (meru)							
						Z							

X	0	0	0	0		P52 Option		X	0	0	0	0	
+	0	0				Hours	GET	+	0	0			
+	0	0	0			Minutes	GET	+	0	0	0		
+	0					Seconds	GET	+	0				
X	0	0	0			Celestial Body Code 1	N71	X	0	0	0		
X	0	0	0			Celestial Body Code 2	N71	X	0	0	0		
						Star Angle Difference (degrees)	N05						
						X	N93						
						Y Gyro Torquing Angles (degrees)							
						Z							
						X							
						Y Calculated Gyro Drift (meru)							
						Z							

NOTES

P52–IMU REALIGN ICM)

V37 Enter, 52 Enter

V04 N06 Flashing

R1: 00001

R2: 0000X IMU Align Option

1 – Preferred, 2 – Nominal,
3 – REFSMMAT, 4 – Landing Site

V51 Flashing – Please Mark

X	0	0	0	0		P52 Option		X	0	0	0	0	
+	0	0				Hours	GET	+	0	0			
+	0	0	0			Minutes	GET	+	0	0	0		
+	0					Seconds	GET	+	0				
X	0	0	0			Celestial Body Code 1	N71	X	0	0	0		
X	0	0	0			Celestial Body Code 2	N71	X	0	0	0		
						Star Angle Difference (degrees)	N05						
						X	N93						
						Y	Gyro Torquing Angles (degrees)						
						Z	Gyro Torquing Angles (degrees)						
						X	Calculated Gyro Drift (meru)						
						Y	Calculated Gyro Drift (meru)						
						Z	Calculated Gyro Drift (meru)						

X	0	0	0	0		P52 Option		X	0	0	0	0	
+	0	0				Hours	GET	+	0	0			
+	0	0	0			Minutes	GET	+	0	0	0		
+	0					Seconds	GET	+	0				
X	0	0	0			Celestial Body Code 1	N71	X	0	0	0		
X	0	0	0			Celestial Body Code 2	N71	X	0	0	0		
						Star Angle Difference (degrees)	N05						
						X	N93						
						Y	Gyro Torquing Angles (degrees)						
						Z	Gyro Torquing Angles (degrees)						
						X	Calculated Gyro Drift (meru)						
						Y	Calculated Gyro Drift (meru)						
						Z	Calculated Gyro Drift (meru)						

NOTES:

P52–IMU REALIGN (CM)

--V37 Enter, 52 Enter

V04 N06 Flashing

R1: 0 0 0 0 1

R2: 0 0 0 0 X IMU AlignOption

1 – Preferred, 2 – Nominal,
3 – REFSMMAT, 4 – Landing Site

V51 Flashing – Please Mark

X	0	0	0	0		P52 Option		X	0	0	0	0	
+	0	0				Hours		+	0	0			
+	0	0	0			Minutes > GET		+	0	0	0		
+	0					Seconds		+	0				
X	0	0	0			Celestial Body Code 1	N71	X	0	0	0		
X	0	0	0			Celestial Body Code 2	N71	X	0	0	0		
						Star Angle Difference (degrees)	N05						
						X	N93						
						Y > Gyro Torquing Angles (degrees)							
						Z							
						X							
						Y > Calculated Gyro Drift (meru)							
						Z							

X	0	0	0	0		P52 Option		X	0	0	0	0	
+	0	0				Hours		+	0	0			
+	0	0	0			Minutes > GET		+	0	0	0		
+	0					Seconds		+	0				
X	0	0	0			Celestial Body Code 1	N71	X	0	0	0		
X	0	0	0			Celestial Body Code 2	N71	X	0	0	0		
						Star Angle Difference (degrees)	N05						
						X	N93						
						Y > Gyro Torquing Angles (degrees)							
						Z							
						X							
						Y > Calculated Gyro Drift (meru)							
						Z							

NOTES:

P52–IMU REALIGN (CM)

V37 Enter, 52 Enter

V04 N06 Flashing

R1: 00001

R2: 0000X IMU Align Option

1 – Preferred, 2 – Nominal,
3 – REFSMMAT, 4 – Landing Site

V51 Flashing – Please Mark

X	0	0	0	0		P52 Option		X	0	0	0	0	
+	0	0				Hours	GET	+	0	0			
+	0	0	0			Minutes	GET	+	0	0	0		
+	0			.		Seconds	GET	+	0				
X	0	0	0			Celestial Body Code 1	N71	X	0	0	0		
X	0	0	0			Celestial Body Code 2	N71	X	0	0	0		
				.		Star Angle Difference (degrees)	N05						
			.			X	N93						
			.			Y	Gyro Torquing Angles (degrees)						
			.			Z	Gyro Torquing Angles (degrees)						
				.		X	Calculated Gyro Drift (meru)						
				.		Y	Calculated Gyro Drift (meru)						
				.		Z	Calculated Gyro Drift (meru)						

X	0	0	0	0		P52 Option		X	0	0	0	0	
+	0	0				Hours	GET	+	0	0			
+	0	0	0			Minutes	GET	+	0	0	0		
+	0			.		Seconds	GET	+	0				
X	0	0	0			Celestial Body Code 1	N71	X	0	0	0		
X	0	0	0			Celestial Body Code 2	N71	X	0	0	0		
				.		Star Angle Difference (degrees)	N05						
			.			X	N93						
			.			Y	Gyro Torquing Angles (degrees)						
			.			Z	Gyro Torquing Angles (degrees)						
				.		X	Calculated Gyro Drift (meru)						
				.		Y	Calculated Gyro Drift (meru)						
				.		Z	Calculated Gyro Drift (meru)						

NOTES:

P52–IMU REALIGN (CM)

V37 Enter, 52 Enter

V04 N06 Flashing

R1: 00001

R2: 0000X IMU Align Option

1 – Preferred, 2 – Nominal,
3 – REFSMMAT, 4 – Landing Site

V51 Flashing – Please Mark

X	0	0	0	0		P52 Option		X	0	0	0	0	
+	0	0				Hours	GET	+	0	0			
+	0	0	0			Minutes	GET	+	0	0	0		
+	0					Seconds	GET	+	0				
X	0	0	0			Celestial Body Code 1	N71	X	0	0	0		
X	0	0	0			Celestial Body Code 2	N71	X	0	0	0		
						Star Angle Difference (degrees)	N05						
						X	N93						
						Y	Gyro Torquing Angles (degrees)						
						Z	Gyro Torquing Angles (degrees)						
						X	Calculated Gyro Drift (meru)						
						Y	Calculated Gyro Drift (meru)						
						Z	Calculated Gyro Drift (meru)						

X	0	0	0	0		P52 Option		X	0	0	0	0	
+	0	0				Hours	GET	+	0	0			
+	0	0	0			Minutes	GET	+	0	0	0		
+	0					Seconds	GET	+	0				
X	0	0	0			Celestial Body Code 1	N71	X	0	0	0		
X	0	0	0			Celestial Body Code 2	N71	X	0	0	0		
						Star Angle Difference (degrees)	N05						
						X	N93						
						Y	Gyro Torquing Angles (degrees)						
						Z	Gyro Torquing Angles (degrees)						
						X	Calculated Gyro Drift (meru)						
						Y	Calculated Gyro Drift (meru)						
						Z	Calculated Gyro Drift (meru)						

NOTES:

P52 – IMU REALIGN (CM)

V37 Enter. 52 Enter

V04 N06 Flashing

R1 00001

R2 0000X IMU Align Option

1 – Preferred. 2 – Nominal,
3 – REFSMMAT, 4 – Landing Site

V51 Flashing – Please Mark

X	0	0	0	0		P52 Option		X	0	0	0	0	
+	0	0				Hours		+	0	0			
+	0	0	0			Minutes	GET	+	0	0	0		
+	0					Seconds		+	0				
X	0	0	0			Celestial Body Code 1	N71	X	0	0	0		
X	0	0	0			Celestial Body Code 2	N71	X	0	0	0		
						Star Angle Difference (degrees)	N05						
						X	N93						
						Y	Gyro Torquing Angles (degrees)						
						Z							
						X	Calculated Gyro Drift (meru)						
						Y							
						Z							

X	0	0	0	0		P52 Option		X	0	0	0	0	
+	0	0				Hours		+	0	0			
+	0	0	0			Minutes	GET	+	0	0	0		
+	0					Seconds		+	0				
X	0	0	0			Celestial Body Code 1	N71	X	0	0	0		
X	0	0	0			Celestial Body Code 2	N71	X	0	0	0		
						Star Angle Difference (degrees)	N05						
						X	N93						
						Y	Gyro Torquing Angles (degrees)						
						Z							
						X	Calculated Gyro Drift (meru)						
						Y							
						Z							

NOTES

P52 IMU REALIGN (CM)

V37 Enter 52 Enter

V04 N06 Flashing

R1 00001

R2 0 0 0 0 X IMU Align Option

1 Preferred, 2 Nominal,
3 REFSMMAT, 4 Landing Site

V51 Flashing Please Mark

X	0	0	0	0		P52 Option		X	0	0	0	0	
+	0	0				Hours	GET	+	0	0			
+	0	0	0			Minutes	GET	+	0	0	0		
+	0					Seconds	GET	+	0				
X	0	0	0			Celestial Body Code 1	N71	X	0	0	0		
X	0	0	0			Celestial Body Code 2	N71	X	0	0	0		
						Star Angle Difference (degrees)	N05						
						X	N93						
						Y Gyro Torquing Angles (degrees)							
						Z							
						X							
						Y Calculated Gyro Drift (meru)							
						Z							

X	0	0	0	0		P52 Option		X	0	0	0	0	
+	0	0				Hours	GET	+	0	0			
+	0	0	0			Minutes	GET	+	0	0	0		
+	0					Seconds	GET	+	0				
X	0	0	0			Celestial Body Code 1	N71	X	0	0	0		
X	0	0	0			Celestial Body Code 2	N71	X	0	0	0		
						Star Angle Difference (degrees)	N05						
						X	N93						
						Y Gyro Torquing Angles (degrees)							
						Z							
						X							
						Y Calculated Gyro Drift (meru)							
						Z							

NOTES

P52–IMU REALIGN (CM)

V37 Enter, 52 Enter

V04 N06 Flashing

R1: 00001

R2: 0000X IMU Align Option

1 – Preferred, 2 – Nominal,
3 – REFSMMAT, 4 – Landing Site

V51 Flashing – Please Mark

X	0	0	0	.0		P52 Option		X	0	0	0	0	
+	0	0				Hours	GET	+	0	0			
+	0	0	0			Minutes	GET	+	0	0	0		
+	0					Seconds	GET	+	0				
X	0	0	0			Celestial Body Code 1	N71	X	0	0	0		
X	0	0	0			Celestial Body Code 2	N71	X	0	0	0		
						Star Angle Difference (degrees)	N05						
						X	N93						
						Y Gyro Torquing Angles (degrees)							
						Z							
						X							
						Y Calculated Gyro Drift (meru)							
						Z							

X	0	0	0	0		P52 Option		X	0	0	0	0	
+	0	0				Hours	GET	+	0	0			
+	0	0	0			Minutes	GET	+	0	0	0		
+	0					Seconds	GET	+	0				
X	0	0	0			Celestial Body Code 1	N71	X	0	0	0		
X	0	0	0			Celestial Body Code 2	N71	X	0	0	0		
						Star Angle Difference (degrees)	N05						
						X	N93						
						Y Gyro Torquing Angles (degrees)							
						Z							
						X							
						Y Calculated Gyro Drift (meru)							
						Z							

NOTES:

P52—IMU REALIGN (CM)

V37 Enter, 52 Enter

V04 N06 Flashing

R1: 0 0 0 0 1

R2: 0 0 0 X IMU Align Option

1 — Preferred, 2 — Nominal,
3 — REFSMMAT, 4 — Landing Site

V51 Flashing — Please Mark

X	0	0	0	0		P52 Option		X	0	0	0	0	
+	0	0				Hours		+	0	0			
+	0	0	0			Minutes > GET		+	0	0	0		
+	0					Seconds		+	0				
X	0	0	0			Celestial Body Code 1	N71	X	0	0	0		
X	0	0	0			Celestial Body Code 2	N71	X	0	0	0		
						Star Angle Difference (degrees)	N05						
						X	N93						
						Y > Gyro Torquing Angles (degrees)							
						Z							
						X							
						Y > Calculated Gyro Drift (meru)							
						Z							

X	0	0	0	0		P52 Option		X	0	0	0	0	
+	0	0				Hours		+	0	0			
+	0	0	0			Minutes > GET		+	0	0	0		
+	0					Seconds		+	0				
X	0	0	0			Celestial Body Code 1	N71	X	0	0	0		
X	0	0	0			Celestial Body Code 2	N71	X	0	0	0		
						Star Angle Difference (degrees)	N05						
						X	N93						
						Y > Gyro Torquing Angles (degrees)							
						Z							
						X							
						Y > Calculated Gyro Drift (meru)							
						Z							

NOTES:

P52 – IMU REALIGN (LM)

V37 Enter, 52 Enter

V04 N06 Flashing

R1: 00001

R2: 0000X IMU Align Option

1 – Preferred, 2 – Nominal
3 – REFSMMAT, 4 – Landing Site

V01 N70 Flashing

R1: 00CDE

C – AOT Detent
0–COAS CAL, 1 – FL, 2 – FC, 3 – FR,
4 – RR, 5 – RC, 6 – RL, 7 – COAS
DE – Celestial Body Code

V51 Flashing -- Please Mark

X	0	0	0	0		P52 Option		X	0	0	0	0	
+	0	0				Hours		+	0	0			
+	0	0	0			Minutes	GET	+	0	0	0		
+	0					Seconds		+	0				
X	0	0				AOT Detent and Star 1 ID	N71	X	0	0			
X	0	0				AOT Detent and Star 2 ID	N71	X	0	0			
						Star Angle Difference (degrees)	N05						
						X	N93						
						Y	Gyro Torquing Angles (degrees)						
						Z							
						X	Calculated Gyro Drift (meru)						
						Y							
						Z							

X	0	0	0	0		P52 Option		X	0	0	0	0	
+	0	0				Hours		+	0	0			
+	0	0	0			Minutes	GET	+	0	0	0		
+	0					Seconds		+	0				
X	0	0				AOT Detent and Star 1 ID	N71	X	0	0			
X	0	0				AOT Detent and Star 2 ID	N71	X	0	0			
						Star Angle Difference (degrees)	N05						
						X	N93						
						Y	Gyro Torquing Angles (degrees)						
						Z							
						X	Calculated Gyro Drift (meru)						
						Y							
						Z							

NOTES:

P52 – IMU REALIGN (LM)

V37 Enter, 52 Enter

V04 N06 Flashing

R1: 0 0 0 0 1

R2: 0 0 0 0 X IMU Align Option

1 – Preferre , 2 – Nominal
3 – REFSMMAT, 4 – Landing Site

V01 N70 Flashing

R1: 0 0 C D E

C – AOT Detent
0–COAS CAL, 1 – FL, 2 – FC, 3 – FR,
4 – RR, 5 – RC, 6 – RL, 7 – COAS

DE – Cel stial Body Co e

V51 Flashing – Please Mark

X	0	0	0	0		P52 Option		X	0	0	0	0	
+	0	0				Hours	GET	+	0	0			
+	0	0	0			Minutes	GET	+	0	0	0		
+	0					Secon s	GET	+	0				
X	0	0				AOT Detent and Star 1 ID	N71	X	0	0			
X	0	0				AOT Detent and Star 2 ID	N71	X	0	0			
						Star Angle Difference (degrees)	N05						
						X	N93						
						Y	Gyro Torquing Angles (degrees)						
						Z	Gyro Torquing Angles (degrees)						
						X	Calculated Gyro Drift (meru)						
						Y	Calculated Gyro Drift (meru)						
						Z	Calculated Gyro Drift (meru)						

X	0	0	0	0		P52 Option		X	0	0	0	0	
+	0	0				Hours	GET	+	0	0			
+	0	0	0			Minutes	GET	+	0	0	0		
+	0					Seconds	GET	+	0				
X	0	0				AOT Detent and Star 1 ID	N71	X	0	0			
X	0	0				AOT Detent and Star 2 ID	N71	X	0	0			
						Star Angle Difference (degrees)	N05						
						X	N93						
						Y	Gyro Torquing Angles (degrees)						
						Z	Gyro Torquing Angles (degrees)						
						X	Calculated Gyro Drift (meru)						
						Y	Calculated Gyro Drift (meru)						
						Z	Calculated Gyro Drift (meru)						

NOTES:

UNDOCK AND SEPARATION TO REV 12 LS TCA

100:04

PREP FOR UNDOCKING
USE ACTIVATION & C.O.
C/L TO 10 MIN BEFORE UNDOCK
-10 CHECK ATT (0,286,060)
V48 21012
LM WT _____ (36,636)
PRO, V34
V06N20 COPY LM AND CSM ANGLES
-1 P47
UNDOCK & SEPARATION ___:___:___:(100:13:56)
V77E
TRIM TO .1 FPS
P00, V60
YAW LT 60°
PITCH UP 90°
*SEQUENCE CAMERA - ON (1 MIN) *
+3 FDAI (0, 016, 0)
*VHF ANT - FWD *
*SEQUENCE CAMERA - OFF *
HELMETS & GLOVES - OFF (OPT)
REVERSE HOSES
*SUIT GAS DIVERTER - EGRESS *
*CABIN GAS RETURN - EGRESS *
✓PGA DIVERTER--IV
*S-BD ANT - AFT, VERIFY COMM *
AOS
TOO
+18 *✓S-BD P_____(+41) *
* Y_____(-55) *
*S-BD ANT - SLEW (>3.0) *
*TRACK MODE - AUTO *
*VHF B XMTR - OFF *
*BIOMED - LEFT, PCM - HI *
*UPLINK SQUELCH - OFF *
VOICE N20 ANGLES TO MSFN
UPDATE FROM MSFN
*COPY REV 12 LS TCA ___:___:___ *
*UPDATA LINK - DATA *
UPLINK CSM S.V., PIPA VIAS,
GYRO DRIFT COMP
*UPDATA LINK - OFF *

100:25

100:25

*CAMERA SETTINGS FOR REV 12/13 TCA *
*LM3/DAC/10/CEX-ULC (f2.8, 250, ∞) *
* 1 FPS, .05 MAG, (5 MIN) *
*LM/DC/60/HCEX-(f5.6, 250, ∞)5 *

DPS THROTTLE CHECK
+18 *CB(16) STAB/CONT: ENG ARM - CLOSE *
THROT CONT - MAN/CDR
TTCA (BOTH) - THROTTLE (MIN)
*VERIFY MSFN CONTACT *
ENG STOP - PUSH
ENG ARM - DES (DES REG LT - ON)
TTCA MIN (6.6% - 13.4%)
THEN SOFT STOP (46.2% - 59.2%)
THEN MAX (93.6% - 100+%)
THEN MIN
ADJUST FRICTION
MAN THROT - LMP
*REPEAT TEST FOR LMP TTCA *
ENG ARM - OFF
*CYCLE CWEA (DES REG LT - OFF) *
ENG STOP - RESET
THROT CONT - AUTO/CDR
TTCA (BOTH) - JETS

APPROACH TO LANDING SITE

V83, SET ORDEAL ON CDR FDAI
PITCH TO OBSERVE LS
FDAI (0, 340/346, 0)
+28 *SEQUENCE CAMERA - ON (5 MIN) *
+32 **REV 12 LANDING SITE TCA** ___:___:___ (100:46)

100:46

REV 12 LS TCA TO AGS ACTIVATION

100:46 **REV 12 LANDING SITE TCA**

+33 *SEQUENCE CAMERA - OFF *

RENDEZVOUS RADAR CHECKOUT

GUID CONT - PGNS, MODE CONT (PGNS) - AUTO
V49, 000.00(OG), 331.00(IG), 000.00(MG)
FOAM (0, 344/331, 0)
CB(11) AC BUS A: RNDZ RDR - CLOSE

CB(11) PGNS: RNDZ RDR - CLOSE
*VHF A XMTR - VOICE/RNG *
✓ TEMP (10° - 75°)
RT/ERR MON - RR
RR SLEW, MANUAL LOCK-ON, RR LGC
TM - RNG/RNG RT
SS
100
+53
V63, PRO, NO TRACK LIGHT OUT, PRO, N78

	R	Ṙ
MAX	27 NM	7 FPS
N78		
VHF		
TM		

COMPARE N78, VHF, TM
V34
*VHF A XMTR - VOICE *
V41N72E (+00000 TRUN, +28300 SHFT)
CB(11) PGNS: RNDZ RDR - OPEN
CB(11) AC BUS A: RNDZ RDR - OPEN
V44, RR - SLEW
RT/ERR MON - LDG RDR/COMPTR
*COPY CSM CIRC P7E & P30 ABORT PADS *
*SET DET TO COUNT DN TO CSM CIRC *

-35 **IMU FINE ALIGN**

V76
P52 OPT 3
CB(11) AC BUS B: AOT LAMP - CLOSE
AOT - DETENT F/0.0°
PGNS MODE CONT - AUTO
1ST STAR DABIH (241)
PRO, RCD GET ____:____:____
2ND STAR ALPHERATZ (201)
N05 ANGLE DIFF _____
PRO

101:10

101:20

N93 TORQUING ANG
X _____
Y _____
Z _____
PRO
N25

LPD CALIBRATION

PRO, ENTR
N70, ENTR 037 (NUNKI), PRO
N87, (+35954, +32018) PRO, PRO
DETENT CL
CB AOT LAMP - OPEN
POO
PGNS MODE CONT - AUTO

AGS ACTIVATION

-17 (LOS -5) *AGS STATUS - STBY (MASTER ALARM, *
* & AGS WARNING LT - ON) *
*CB(16) STAB/CONT: AEA - CLOSE *
* (AGS WARNING LT - OFF) *
CB(11) AC BUS B: AGS - CLOSE
*RECORD TIME ____:____:____ *
*AGS STATUS - OPERATE (MASTER ALARM, *
& AGS WARNING LT - ON) *
*O2/H2O QTY MON - C/W RESET *
*ATT MON (LMP) - AGS *
*V16 N65E *
*SET AGS TIME USING 100 HR BIAS *
* 377 _____ (+00800) *
*616+0 *
*224 _____ (+60410) *
*225 _____ (+29365) *
*226 _____ (+60423) *
*305 _____ (-01751) *
*662 _____ (-54776) *
*673 _____ (-32014) *

ΔBIAS (P52)

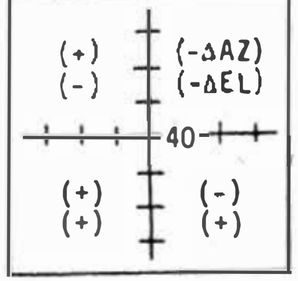

AGS ACTIVATION TO BACKSIDE

101:20

*COPY AGS K FACTOR _____: _____: _____ *
*V47E *

*V25E LOAD AGS K FACTOR UPDATE *
*414+1 *
*400+3 (AFTER 50 16) *
*V83, 317R, 440R *

CONFIGURE COMM FOR LOS

-13 *MATCH INDICATED ANGLES *
*TRACK MODE - SLEW *
*S-BD ANT - AFT *
*SET P____(+166) *
* Y____(-38) *
*VHF B XMTR - DATA, PCM - LO *
*UPLINK SQUELCH - ENABLE *
*S-BD ANT - FWD (AFTER LOS) *

LOS
101
+23

MNVR TO AGS CAL ATT

V49, +33750 OGA ROLL + 24
+02250 IGA PITCH + 14 } FOAI
+02250 MGA YAW + 21

AGS ACTIVATION CON'T

*412R+1 SELF TEST SATISFACTORY *
* +3 LOGIC TEST FAILURE *
* +4 MEMORY TEST FAILURE *
* +7 LOGIC & MEMDRY TEST FAILURE *
*574R DESCENT STAGE (+ NOT STAGED) *
*604R LUNAR SURFACE FLAG *
* (+ NOT ON LUNAR SURFACE) *
*612R STAGING COUNTER (+0 NOM) *
*232R +00600 *
*233R +00250 *
*464R +00500 *
*465R +00195 *
*623R +00000 *
*514R -53334 *
*515R -47371 *
*516R +00000 *
*000 +888888 (OPR ERR LT - ON) *
*123 -45679 (DO NOT ENTR) *

101:35

101:35

CSM CIRCULARIZATION ____:____:____(101:34:55)

P76 (UPDATE CSM S.V.), PRO
V82, N12-00002, PRO
CSM HA/HP
*PCM - HI *
*V47, 414+1 *
V83, SET ORDEAL
*317R, 440R, PCM - LO *

SR
101
+41

AGS CALIBRATION

*READ AND RECORD INITIAL CAL.NOS. *
PGNS MODE CONT - ATT HOLD
*VERIFY 25 MIN SINCE TURN-ON *
V60, V76, V16N20E
RATES < 0.075°/SEC
*400+6, START WATCH *
*400R *
MONITOR ICDU LIMITS
{OGA +31500 / +00000
IGA +00000 / +04500
MGA +00000 / +04500} LIMITS

BEFORE LIMITS ARE EXCEEDED, 400+0.
IF TIME IS LESS THAN 5 MINUTES
REPEAT AGS CALIBRATION.

*CHECK ECS, RCS, EPS, APS *
*CYCLE CWEA CB *
*400R+0 *
*READ AND RECORD CAL VALUES *

	INIT	CAL	± LIM
540			± .039
541			± .039
542			± .039
544			±2.00
545			±2.00
546			±2.00

101:55

LB:83

101:55

GUID CONT - PGNS, MODE CONT (PGNS) AUTO
V49, 000.00(OG), 310.00(IG), 000.00(MG)
FDAI (0, XXX/310, 0)

*RESET DET TO COUNT ON TO PDI0 *
*S-BD ANT - FWD, VERIFY COMM *
*S-BD P _____(+166) *
* Y _____(-38) *
*S-BD ANT - SLEW (±3.0) *
*TRACK MODE - AUTO *
*VHF B XMTR - OFF *
*BIOMED RIGHT, PCM HI *
*UPLINK SQUELCH - OFF *
*S-BAND FUNCTIONS - RANGE *
*VOICE AGS CAL. NOS. TO MSFN *

AOS
T02
+12

-20 DPS PRESS + C.O.

PRPLNT TEMP/PRESS MON - DES 1 & 2
FUEL 50°-75°F 50-130 PSI
OXID 50°-75°F 30-80 PSI
HELIUM MON: SUPCRIT PRESS 1070-1570
: AMB PRESS 1495-1750
DES He REG 1 to - GRAY, REG 2 to - bp
MASTER ARM - ON
DES PRPLNT ISOL VLV - FIRE
He PRESS/DES START - FIRE
MASTER ARM - OFF
PRPLNT TEMP/PRESS MON: DES 1 & 2
FUEL & OXID 50°-90°F 200-250 PSI
HELIUM MON: AMB PRESS 200-1110
: SUPCRIT PRESS 1070-1570

-15 LANDING RADAR CHECKOUT
CB(11) PGNS: LDG ROR - CLOSE
CK TEMP (60° - 95°)
X-PNTRS - HI MULT

MODE SEL - LR
TM SW - H/H
LDG ANT - AUTO

102:20

BACKSIDE TO PDI0

102:20

ROR TEST - LDG
POWER SIGNAL LIGHT OUT
TEST MON - ALT/VEL XMTR (2.1 - 5.0), AGC
X-PNTRS PEGGED UP, LT
TM (8000 ± 100)/H (-480 ± 2)
V63 N12 OPT 2, PRO
N66 8286 ± 10, ANT POS 1 (00001), PRO
N67 V_x (-00495 ± 2), V_y (+01862 ± 2),
V_z (+01331 ± 2)
V34, ROR TEST OFF (ALT = 0, POWER SIGNAL
LIGHT ON, X-PNTRS - CENTERED)
CB(11) PGNS: LOG ROR - OPEN

UPDATE FROM MSFN
*UPDATE LINK - DATA *
UPLINK CSM/LM S.V., PIPA BIAS,
DESCENT TARGETING, LPD BIAS
*COPY PADS FOR *
* NO PDI + 12 ABORT *
* PDI *
* PDI EARLY ABORT *
* PDI LATE ABORT *
* T2 ABORT *
* T3 TIG *
*UPDATA LINK - OFF *
*V47, 414+1, 400+3 *
V83, SET ORDEAL
*317R, 440R, 277R *

ALT CHECK
-10 MODE CONT (AGS) - ATT HOLD
GUID CONT - AGS
MNVR TO AND MAINTAIN FDAI (0, 295/XXX, 0),

-0:10 POI LMK LPD ALT CHECK _____

POI_0 ____:____:____ (102:34)

*SEQUENCE CAMERA - ON (5 MIN) *
PITCH TO OBSERVE LS

102:35

PDI$_0$ TO BACKSIDE

102:35

LANDING SITE OBSERVATION

*SEQUENCE CAMERA - OFF *

*CAMERA SETTINGS (PDI) *
*LM3/DAC/10/CEX- *
*(f2.8, 500, ∞) 12 FPS, *
* 0.75 MAG, (6 MIN) *
*LM3/OC/60/HCEX-(f5.6, 250, ∞)10 *
*RELOCATE CAMERA *

GUID CONT - PGNS

SS
102
+50 +16

IMU FINE ALIGN

V76
P52 OPT3
CB AOT LAMP CLOSE
AOT - DETENT F/0.0°
PGNS MODE CONT - AUTO
1ST STAR DABIH (241)
PRO, RCD GET ___:___:___
2ND STAR ALPHERATZ (201)

NO5 ANG DIFF _____
PRO
N93 TORQUING (MAX)
X_____(.370)
Y_____(.830)
Z_____(3.000)
PRO
N25

COAS CALIBRATION

PRO, ENTR
N70, ENTR 044 (ENIF), PRO BIAS AZ_____
N87, (+00000,+00000)PRO, PRO EL_____
DETENT CL
CB AOT LAMP - OPEN
POO
*400+3 *

103:10

103:10

P63 IGNITION ALGORITHM TEST

P63

PGNS MODE CONT - AUTO
N18 R, P, Y (0, 111, 310) PRO
YAW LEFT 50°
POO
V48, 22112, 00011, PRO, V34

CONFIGURE COMM FOR LOS

*MATCH INDICATED ANGLES *
*TRACK MODE - SLEW *
*S-BD ANT - AFT *
*SET P___(-3) *
* Y___(+39) *
*VHF B XMTR - DATA *
*PCM - LO *
*UPLINK SQUELCH - ENABLE *
*S-BD ANT-FWD (AFTER LOS) *
COAS TO OVERHEAD WINDOW
VERIFY LOOSE GEAR STOWED
RESTRAINTS ATTACHED
VERIFY FOAI'S INERTIAL

PRE-PDI ECS CHECKOUT

CONNECT HOSES NORMALLY
HELMETS AND GLOVES ON
*CABIN REPRESS - CLOSE *
*SUIT GAS DIVERTER - EGRESS *
*CABIN GAS RETURN - EGRESS *
*PRESS REGS A&B - EGRESS *
*RESET DET TO COUNT ON TO POI *

PRE-PDI SWITCH SETTING CHECK

*VHF ANT - FWD *
CB(11)AC BUS B: INV 1 - CLOSE *
*SELECT INV 1 *

LOS
103
+17

SR
103 -55
+34

103:35

LB-85

BACKSIDE TO PDI

103:35

-54

CB(11) STAB/CONT: AELO - CLOSE
CB(11) STAB/CONT: ABORT STAGE - CLOSE
RESET ENG STOP PB
SET WINDOW BARS

*CB(16) STAB/CONT: AELO - CLOSE *
CB(16) STAB/CONT: ABORT STAGE - CLOSE

*CYCLE CWEA CB *
-40 *BATS 5 & 6 NORM FEED - ON *
*RECORD GET _____:_____:_____ *

AOS *S-BD ANT - FWD, VERIFY COMM *
-25 *S-BD P _____(-3) *
104 * Y _____(+34) *
+04 *S-BD ANT - SLEW (-3.0) *
*TRACK MODE - AUTO *
*VHF B XMTR - OFF *
*VHF A XMTR - VOICE/RNG *
*BIOMED - LEFT, PCM - HI *
*UPLINK SQUELCH - OFF *

*VOICE ASC BATT ON TIME TO MSFN *

THROT CONT - AUTO
CDR TTCA - THROTTLE - MIN
*LMP TTCA - THROTTLE - SOFT STOP *
RATE SCALE - 25°/SEC
ATT/TRANSL - 4 JETS
CHECK DPS, APS, RCS, ECS, EPS

UPDATE FROM MSFN
*UPDATA LINK - DATA
UPLINK LM S.V., RLS,
MSFN GYRO DRIFT COMP
*UPDATA LINK - VOICE BU *
*COPY AGS RLS (231)_____ *

✓BURN ABORT RULES

104:10

104:10

-18

-10

-8

-5

-4

-1:00

-0:30
-0:07.5
-0:05
0:00 POI _____:_____:_____ (104:28:55)
+0:02
+0:05

AGS INITIALIZE
*V47, 414+1 *
*V83, 317R, 440R *
*240 + (231 RLS PAD) *
*254+02897 *
*262-00136 *
S-BAND FUNCTIONS - CWEA ENABLE
MODE SEL - AGS

POWERED DESCENT INITIATION
V25 N69E (IF NO UPLINK)
PGNS MODE CONT - AUTO
AGS MODE CONT - AUTO
P63
AUDIO MODE (BOTH) - VOX
PRPLNT QTY MON - DES 1
OPS CONFIG CARD
*RESET DET *
N18, R, P, Y (0, 111, 310)
VERIFY FDAI
*V40N20E, 400+3, 410+0 *
*400+1, 433R VI *
CB(11) PGNS: LOG ROR - CLOSE
ALT XMTR
PRO - FINAL TRIM
ENTR, DET
GO/NO-GO FOR POI
COMM CHECK WITH CSM
RESET WATCH
MASTER ARM - ON
MODE SEL - PGNS
*367R *
ENG ARM - DES
ULLAGE
PRO
(NO IGN) - START PB - PUSH
DES ENG CMD OVRD - ON
MASTER ARM - OFF

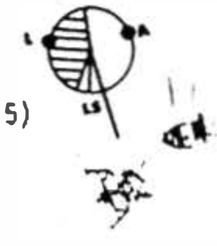

LB-86

PDI THROUGH TD + 3 MINUTES

-1:00 MASTER ARM-ON
MODE SEL-PGNS
367R
- :30 ENG ARM-DES
- :07.5 ULLAGE
- :05 PRO

+ :00 **PDI**

+ :02 (NO IGN) ---
START PB-PUSH
+ :05 DES ENG OVRD-ON
MASTER ARM-OFF
+ :26 THROTTLE UP
√T/W > 1.6

+2 V21 N69E (DN RNG)
+3 YAW FACE UP
+4 √ ED BATTS
V57E TO PERMIT
LR DATA
+5 V24 N69E (DN RNG,
X-RNG)

N68

EVAL MAN CONT

+8 V23 N69E (ALT)

223+00120 (E @ 12K)
360-OXXXOE
SEQ CAMERA - ON

TFI	θ	ΔHMAX	(-ḢMAX) -HDOT	H	OPS	SBD
0:00	111		5.0	50100	95	-3/39
0:30	110		6.0	50000	95	
1:00	103		25.0	49500	95	4/36
1:30	98		38.0	48500	92	
2:00	93		47.0	47200	87	13/30
2:30	89		54.0	45700	82	
3:00	85		59.0	44000	77	19/24
3:30	82		63.0	42200	71	
4:00	79		66.0	40300	66	-13/-15
4:30	77		70.0	38500	61	
5:00	76	+17000	77.0	37000	56	-10/-18
5:30	74	+17000	84.0	33900	51	
6:00	72	+16000	90.0	30900	45	-8/-20
6:30	71	+14000	(494.0) 99.0	28200	40	
7:00	68	+12400	(464.0) 97.0	25200	35	-4/-23
7:30	63	+10000	(435.0) 89.0	22300	30	
8:00	60	+ 8200	(401.0) 120.0	19300	27	1/-28
8:30	57	+ 6900	(352.0) 141.0	15200	24	
9:00	57	+ 4500	(291.0) 155.0	10900	21	4/-30

P64

P64 + 15 SEC:
NO THROTTLE ON
- ABORT

MODE CONT (PGNS)-ATT HOLD

P66

X-PNTR - LO MULT

BINGO FUEL
DES QTY LT+1+31

TOUCHDOWN

ENG STOP - PUSH
ENG ARM - OFF
PRO
DES ENG CMD OVRD - OFF
MODE CONT (PGNS)-ATT HLD
MODE CONT (AGS)-AUTO
413+1
RECYCLE PARKER VALVES

H	(-ḢMAX) -HDOT	OPS	VH (362)
7000	(226.0) 162.0	18	274
6000	(207.0) 157.0	18	238
5000	(185.0) 135.0	17	222
4000	(162.0) 112.0	16	203
3000	(135.0) 90.0	15	180
2000	(104.0) 62.0	14	144
1000	(63.0) 33.0	12	90
500	(35.0) 16.0	11	42
400	(28.0) 13.0	10	30
300	(21.0) 9.0	10	27
200	(12.0) 5.0	9	-4

ABORT STAGE - PUSH
ENG ARM - ASC
ENG STOP - RESET
ENG START - PUSH
CALL P71
MODE CONT (BOTH) - AUTO

LB87

LM LANDING DISPLAYS
P63, P64, P66

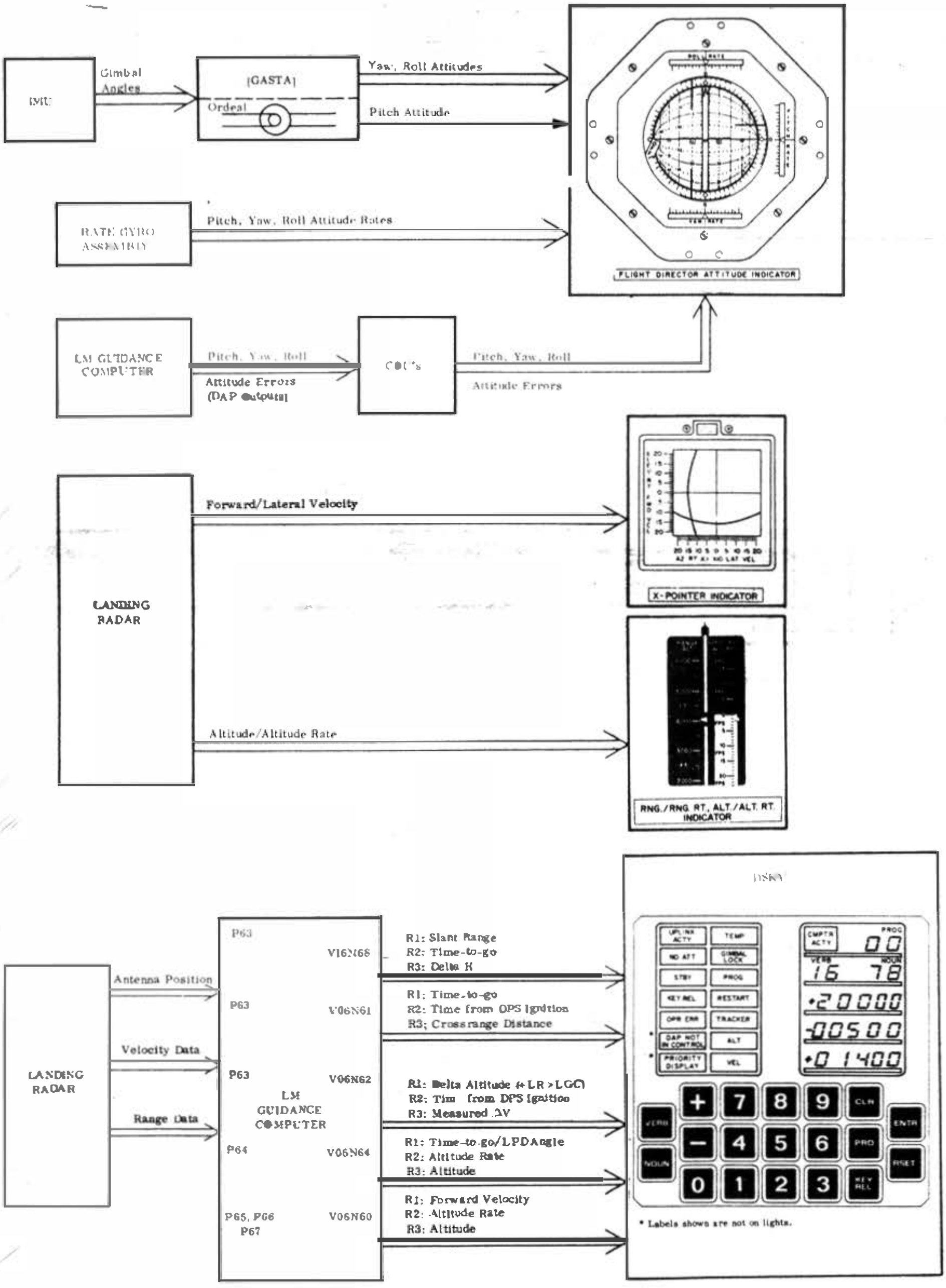

DESCENT DISPLAYS

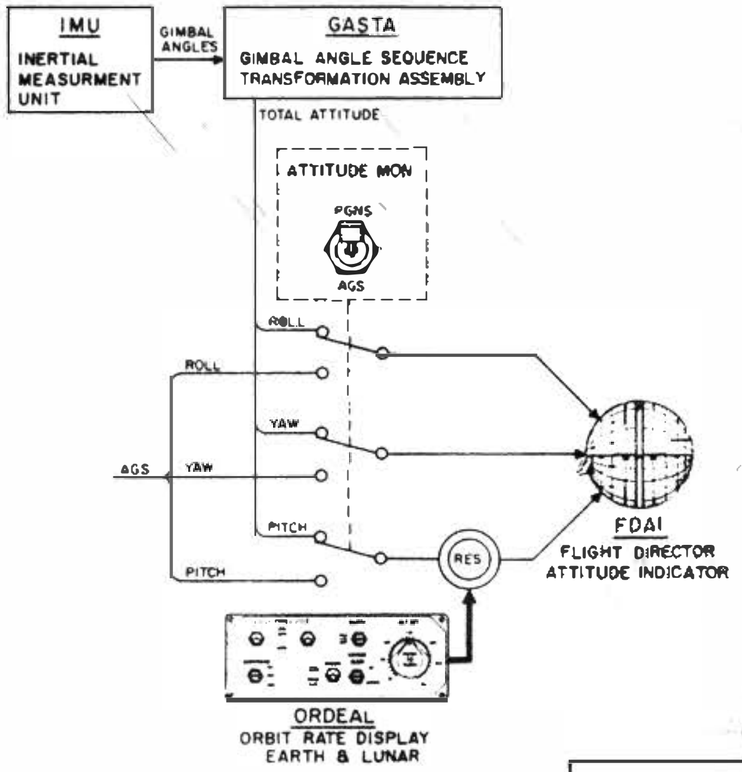

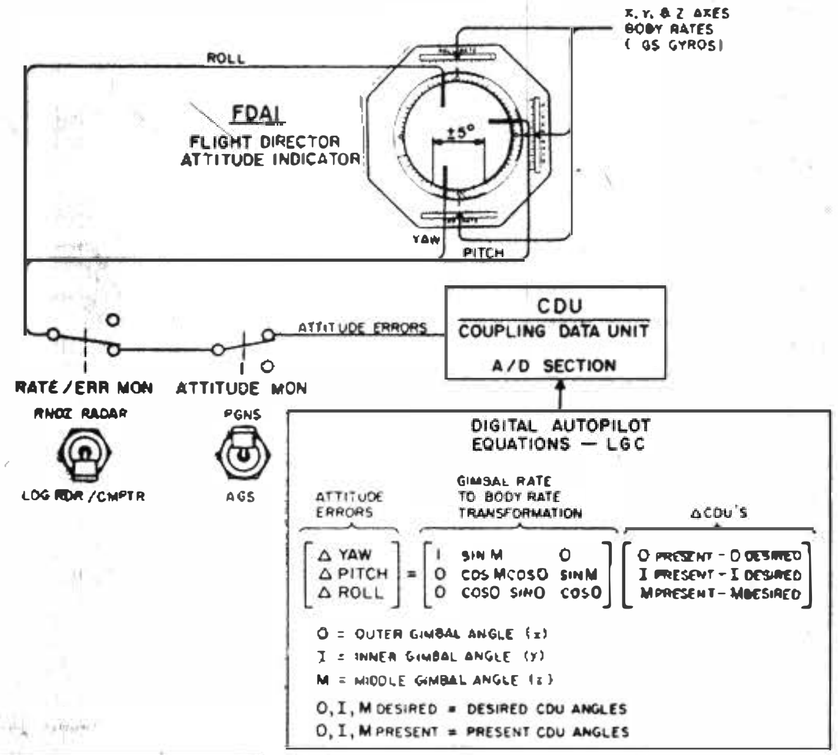

FLIGHT DIRECTOR ATTITUDE INDICATOR

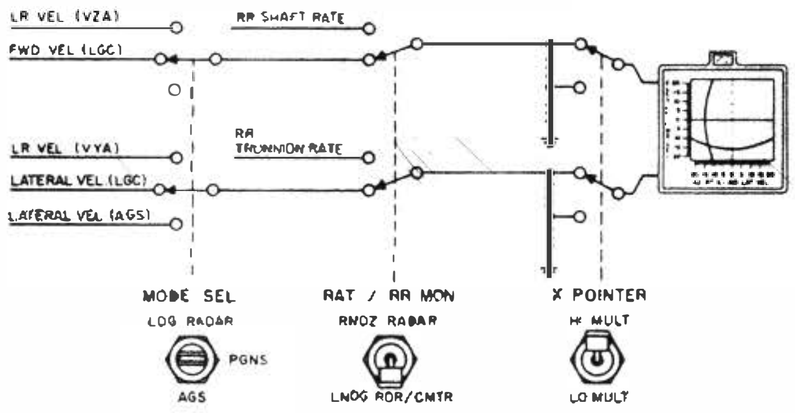

X POINTER INDICATOR

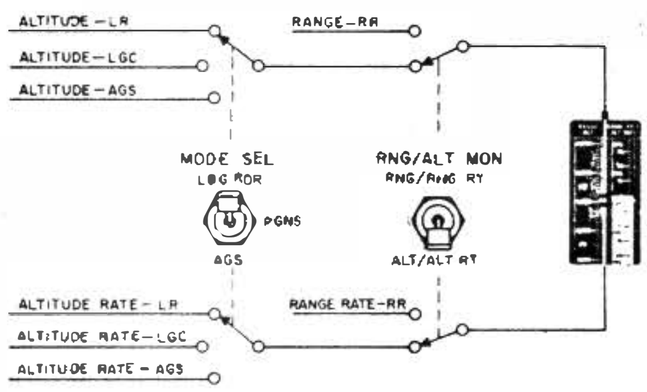

RANGE/RANGE RATE, ALTITUDE/ALTITUDE RATE INDICATOR

LANDING SITE REDESIGNATION (P64 ONLY)

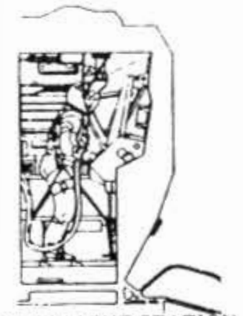

ASTRONAUT FLIGHT STATION

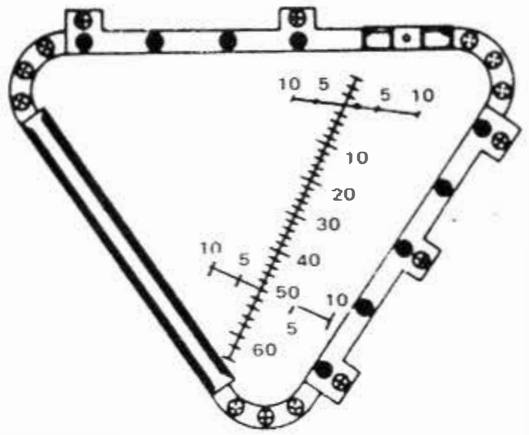

COMMANDER'S WINDOW
(LANDING POINT DESIGNATOR ON
COMMANDER'S WINDOW ONLY)

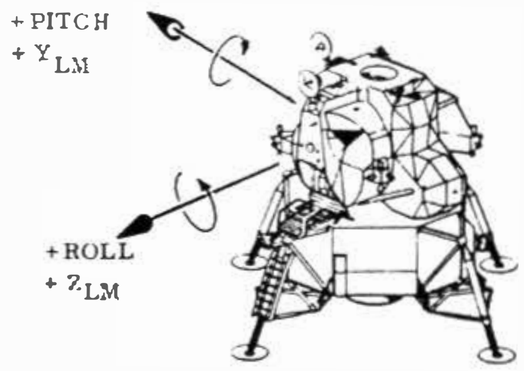

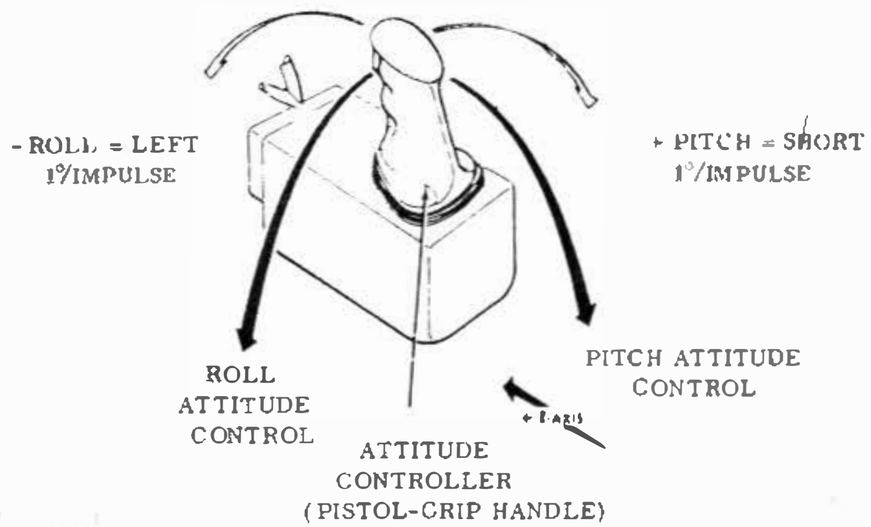

LB-90

LANDING PHASE MODE CONTROL
P66

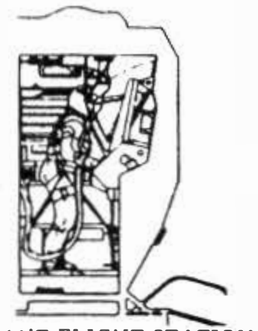

ASTRONAUT FLIGHT STATION

RATE OF DESCENT (ROD)

+1 FPS

CENTER

-1 FPS

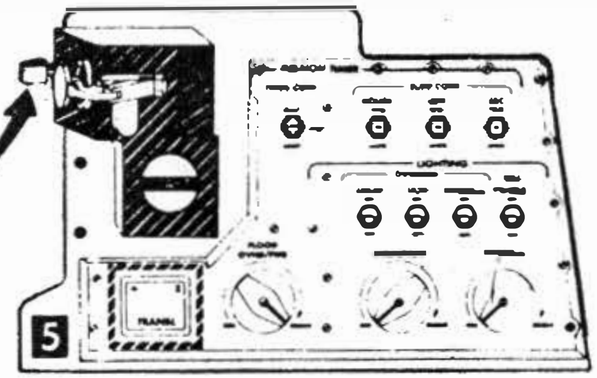

MODE CONTROL

PGN S AUTO

PGN S AUTO

OR

ATT HOLD

OFF

OFF

AGS AUTO

ATT HOLD

OFF

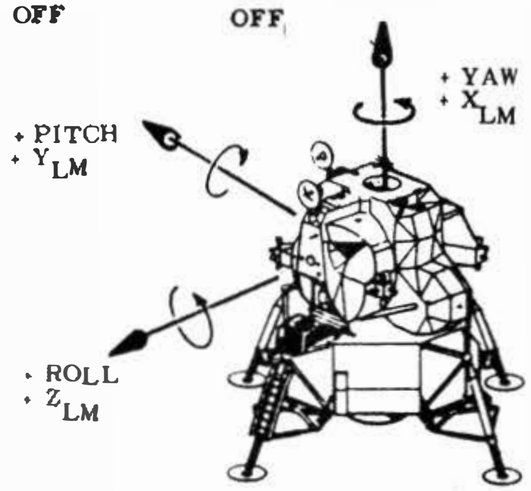

MANUAL LM ATTITUDE CONTROLLER

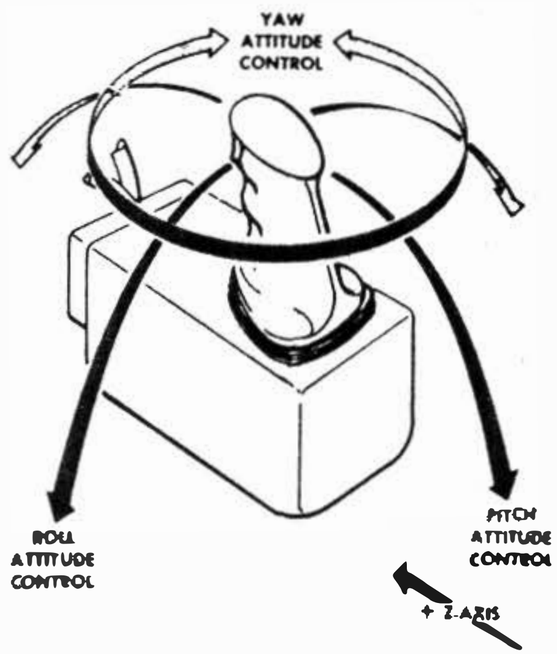

LB-91

THE HADLEY APENNINES REGION

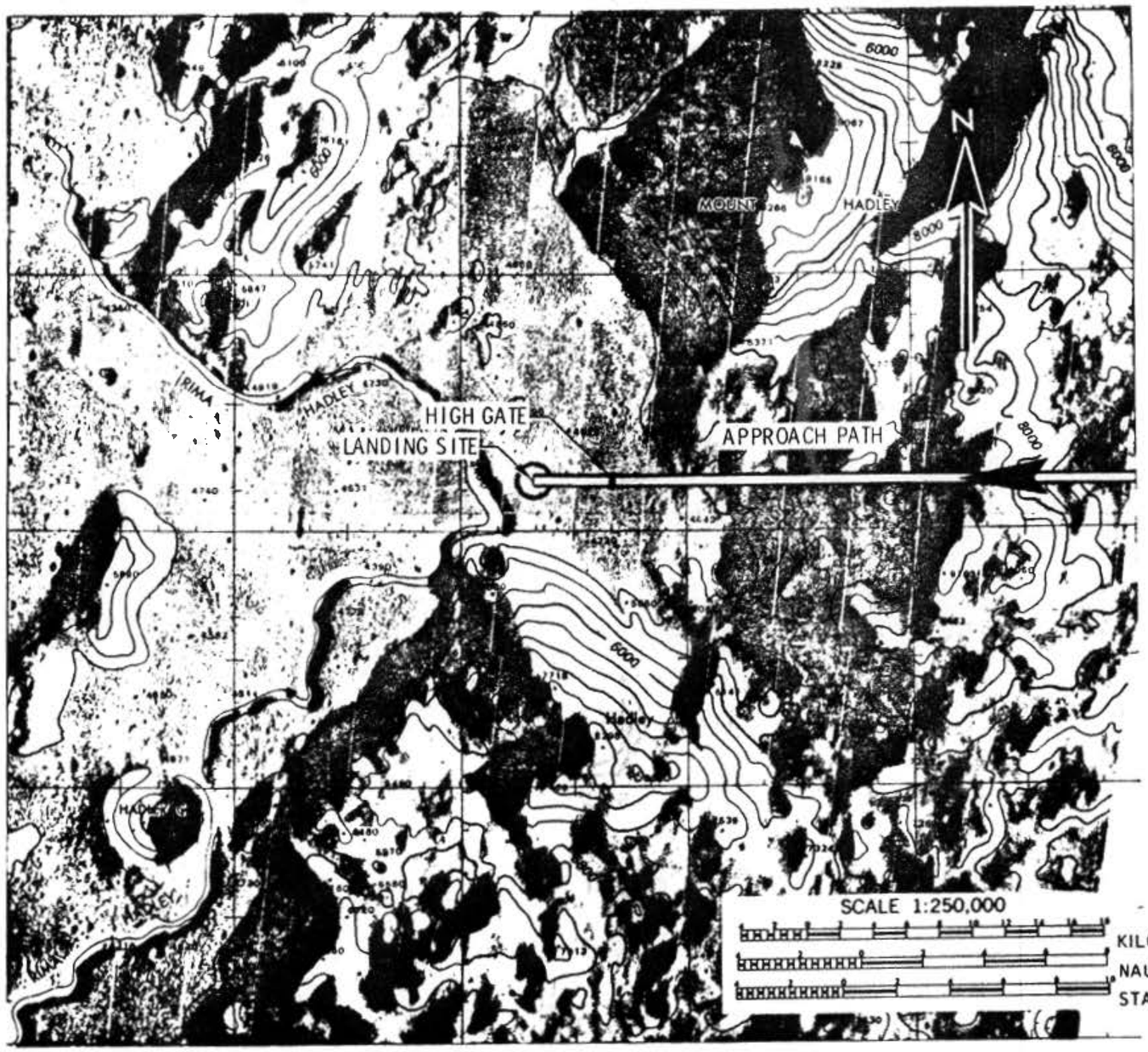

LB-92

APOLLO 15 LRV TRAVERSES

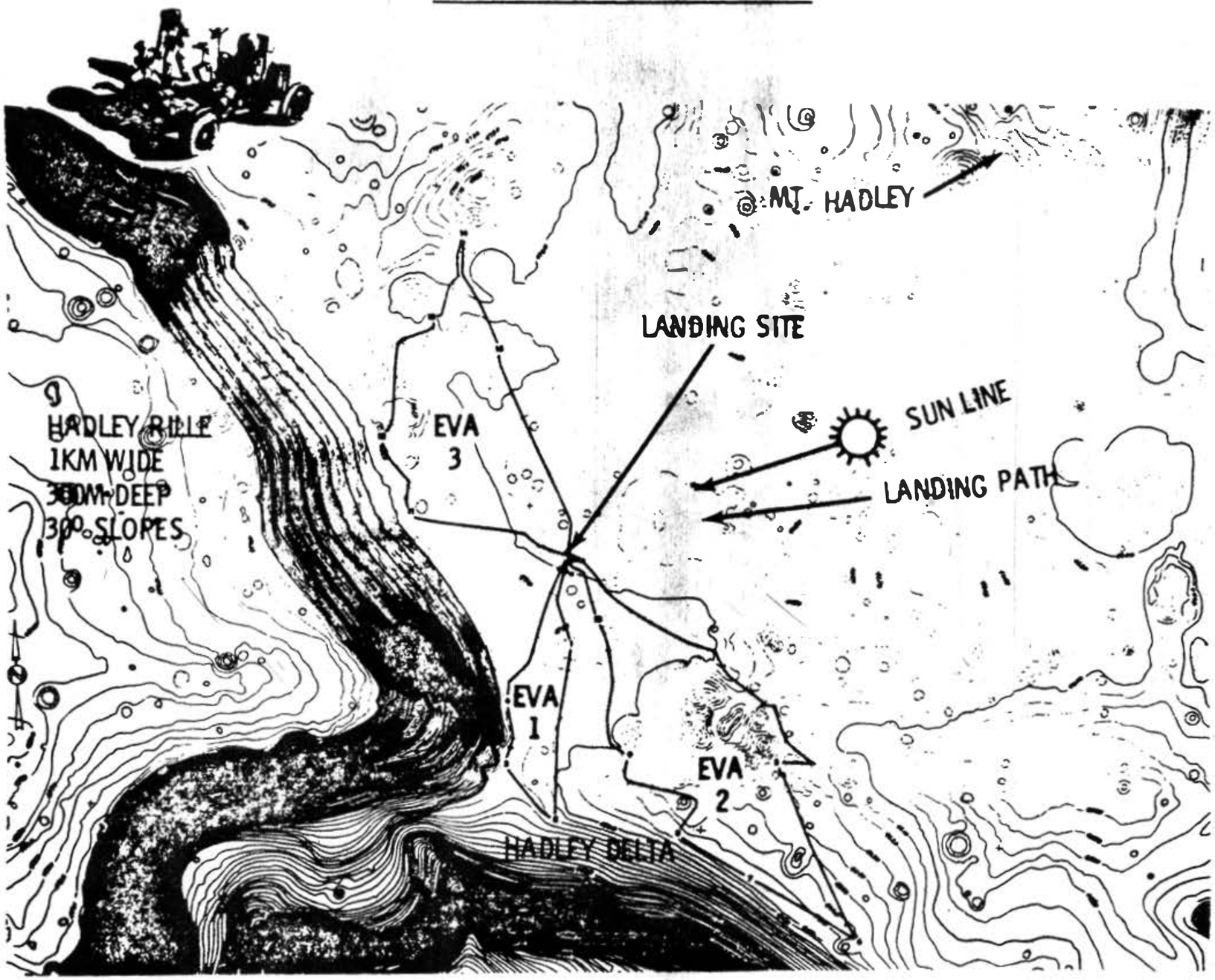

LB-93

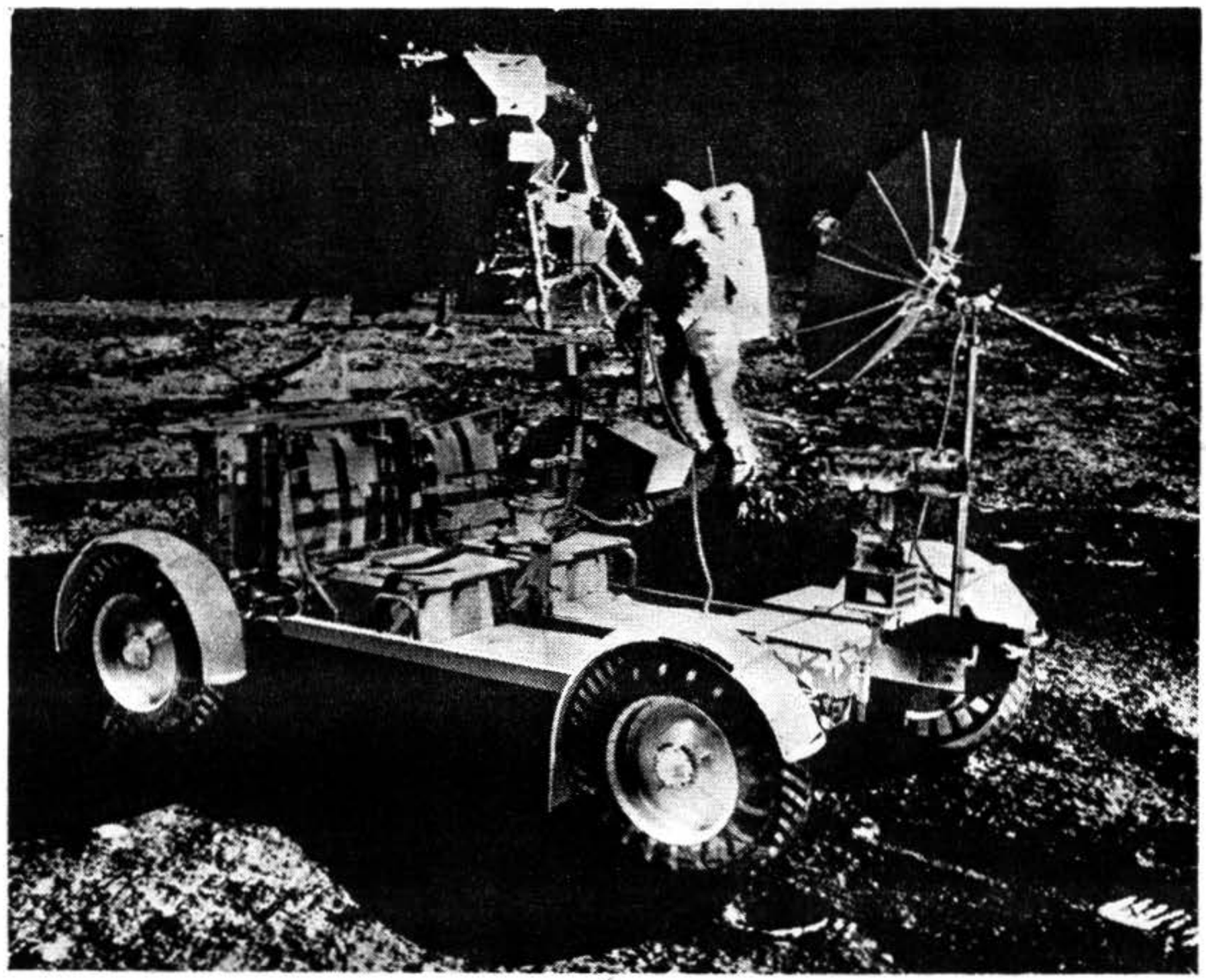

1st P57

P57, R2 00003
N06 00010
00001
00110
(No Att light-On/Off, Twice)
N04 + _____ Navigation Error (0.01°)
V32E (Recycle)
N04 _____
PRO
N22 ICDU Angles
PRO (No Att light-On/Off)
N05 _____ Angle Difference (0.01°)
PRO
N93 _____ X Torquing Angles (0.001°)
_____ Y
_____ Z
V34E, POOE

2nd P57

P57, R2 00003
PRO
N06 00010
00002
00110
PRO
N70/71 _____ 1st STAR
N79
Cursor _____ (0.01°)
Spira _____
PRO
N79
Cursor _____
Spiral _____
PRO
N79
Cursor _____
Spiral _____
PRO, PRO
N70/71 _____ 2nd STAR
N79
Cursor _____ (0.01°)
Spira _____
PRO
N79
Cursor _____
Spira _____
PRO
N79
Cursor _____
Spira _____
PRO, PRO
N05 _____ Star Ang e Difference (0.01°)
PRO
N93 _____ X Torquing Angle (0.001°)
_____ Y
_____ Z
PRO (Gyro Torquing),
GET _____: _____: _____
N25 00014
ENTR
N89 _____ Lat (0.001°)
_____ Long/2 (0.001)
_____ Alt (0.01 nmi)
Consult MSFN
PRO - (UPDATE RLS)
V34E - (TERM)
POOF

3rd P57

P57, R2 00003
PRO
N06 00010
00002
00110
PRO
N70/71 _____ 1st STAR
N79
Cursor _____ (0.01°)
Spira _____
PRO
N79
Cursor _____
Spira _____
PRO
N79
Cursor _____
Spira _____
PRO, PRO
N70/71 _____ 2nd STAR
N79
Cursor _____ (0.01°)
Spiral _____
PRO
N79
Cursor _____
Spira _____
PRO
N79
Cursor _____
Spiral _____
PRO, PRO
N05 _____ Star Angle Difference (0.01°)
PRO
N93 _____ X Torquing Angle (0.001°)
_____ Y
_____ Z
PRO (Gyro Torquing),
GET _____: _____: _____
N25 00014
ENTR
N89 _____ Lat (0.001°)
_____ Long/2 (0.001°)
_____ Alt (0.01 nmi)
Consult MSFN
PRO - (UPDATE RLS)
V34E - (TERM)
CB (11) AOT LAMP - Open
POOE

4th P57

P57, Set R2 00004
N34 Load LO Time, PRO
N06 00010
00003
06010
PRO
(No Att light - On/Off, Twice)
N04 + _____ Gravity Error (0.01°)
V32E (Recycle)
N04 + _____ Gravity Error (0.01°)
PRO
N22 ICDU Angles
PRO (No Att light - On/Off)
N70/71 _____ STAR ID
N79
Cursor _____ (0.01°)
Spiral _____
PRO
N79
Cursor _____
Spiral _____
PRO
N79
Cursor _____
Spiral _____
PRO, PRO
N05 _____ Star Angle Difference (0.01°)
PRO
N93 _____ X Torquing Angles (0.001°)
_____ Y
_____ Z
PRO (Gyro Torquing), GET ____:____:____
N25 00014, ENTR (TERM)
POOE

5th P57

P57E, R2 00004
N34 Load TIG, PRO
N06 00010
00003
00110
PRO
(No Att light - On/Off, Twice)
N04 + _____ Gravity Error (0.01°)
V32E
N04 + _____ Gravity Error
PRO
N22 ICDU Angles
PRO (No Att light - On/Off)
N70/71 _____ STAR ID
N79
Cursor _____ (0.01°)
Spiral _____
PRO
N79
Cursor _____
Spiral _____
PRO
N79
Cursor _____
Spiral _____
PRO, PRO
N05 _____ Star Angle Difference (0.01°)
PRO
N93 _____ X Torquing Angles 0.001°)
_____ Y
_____ Z
PRO (Gyro Torquing), GET ____:____:____
N25 00014, ENTR (TERM)
POOE

APOLLO 15 P57's

	The purpose is to measure and determine the direction of gravity in NB space as measured by PIPA's in SM space. The first gravity error angle is the dot product between $\bar{r}_{LS}$ (navigated) and measured $\bar{g}_{LS}$. Subsequent gravity error angles are the angles between successive gravity measurements.
First P57 Technique 1, Option 3	The N93 is not normally torqued primarily because of uncertainties in $\bar{r}_{LS}$ (navigated) at PDI. $(\bar{S}_B =)\ \bar{g}_{LS}\ (NB) = [SMNB]\ \bar{g}_{LS}\ (SM)$ $(\bar{S}_A =)\ \bar{r}_{LS}\ (NB) = [SMNB]\ [REFSMMAT]\ \bar{r}_{LS}\ (navigated)$ $\cos^{-1}\left\{\text{Unit } \bar{g}_{LS}\ (NB) \cdot \text{Unit } \bar{r}_{LS}\ (NB)\right\} = \text{Angular Separation}$
Second P57 Technique 2, Option 3	The purpose is to align the SM to the predescent landing site REFSMMAT and calculate coordinates of the landing site. N93 represents gyro drift over the interval from the last P52 provided the N93 in the prior P57 was <u>not</u> torqued. The drift terms will include acceleration sensitive terms due to descent and 1/6 g. Unit $\bar{g}_{LS}$ (NB) determined from the first P57 can now be accurately transformed to moon-fixed coordinates and displayed. If $\bar{g}_{LS}$ coordinates are accepted (via PROCEED), they are converted and stored as $\bar{r}_{LS}$ in moon-fixed space. $\text{Unit } \bar{g}_{LS}\ (MF) = [M(t)][\ REFSMMAT]^T\ [NBSM]\ \text{Unit } \bar{g}_{LS}\ (NB)$ Where M(t) is the transformation between ECI and MF space.
Third P57 Technique 2, Option 3	The purpose is to verify the landing site coordinates of the second P57. The procedure is the same as the second P57 except for gyro drift which cannot be accurately calculated due to the short interval of time. Some difference is expected due to sighting inaccuracies of the AOT.
Fourth P57 Technique 3, Option 4	The purpose is to initially align the platform after power up to the liftoff REFSMMAT at TIG. The measured vectors ($\bar{S}_B$) are gravity and one star (technique 3). $\begin{bmatrix} X_{SM} \\ Y_{SM} \\ Z_{SM} \end{bmatrix} = \begin{bmatrix} \text{Landing Site} \\ \text{REFSMMAT} \end{bmatrix} \bar{r}_{ECI} = \begin{bmatrix} \text{Unit } (\bar{r}_{landing}) \\ \text{Unit } (\bar{Z}_{SM} \times \bar{X}_{SM}) \\ \text{Unit } [(\bar{r}_{CSM} \times \bar{v}_{CSM})_{TIG} \times \bar{X}_{SM}] \end{bmatrix} \begin{bmatrix} X_{ECI} \\ Y_{ECI} \\ Z_{ECI} \end{bmatrix}$ $[\bar{S}_A] = \begin{bmatrix} \text{Unit } (\bar{r}_{LS_{TIG}}) \\ \text{Unit } (\bar{r}_{LS_{TIG}} \times \bar{S}_2) \times \bar{r}_{LS_{TIG}} \\ \text{Unit } (\bar{r}_{LS_{TIG}} \times \bar{S}_2) \end{bmatrix} \begin{bmatrix} X_{SMD} \\ Y_{SMD} \\ Z_{SMD} \end{bmatrix}$ (specified) $\quad \bar{S}_B = \begin{bmatrix} \text{Unit } \bar{g}_{LS} \\ \text{Unit } (\bar{g}_{LS} \times \bar{S}_2) \times \bar{g}_{LS} \\ \text{Unit } (\bar{g}_{LS} \times \bar{S}_2) \end{bmatrix} \begin{bmatrix} X_{SM} \\ Y_{SM} \\ Z_{SM} \end{bmatrix}$ (measured) $[\bar{S}_A] = [A][\bar{r}_{SMD}] \qquad [\bar{S}_B] = [B][\bar{r}_{SM}]$ $[\bar{r}_{SMD}] = [B]^T[A][\bar{r}_{SM}]$ $[\bar{r}_{SMD}] = \text{CALGTA} = \text{GTA's}$
Fifth P57 Technique 3, Option 4	The pur ose is to check the alignment to the liftoff orientation. If same TIG as above is used and CSM SV has not been updated, the N93 can be used for gyro drift.

LUNAR SURFACE ALIGNMENT
AOT DETENT POSITIONS

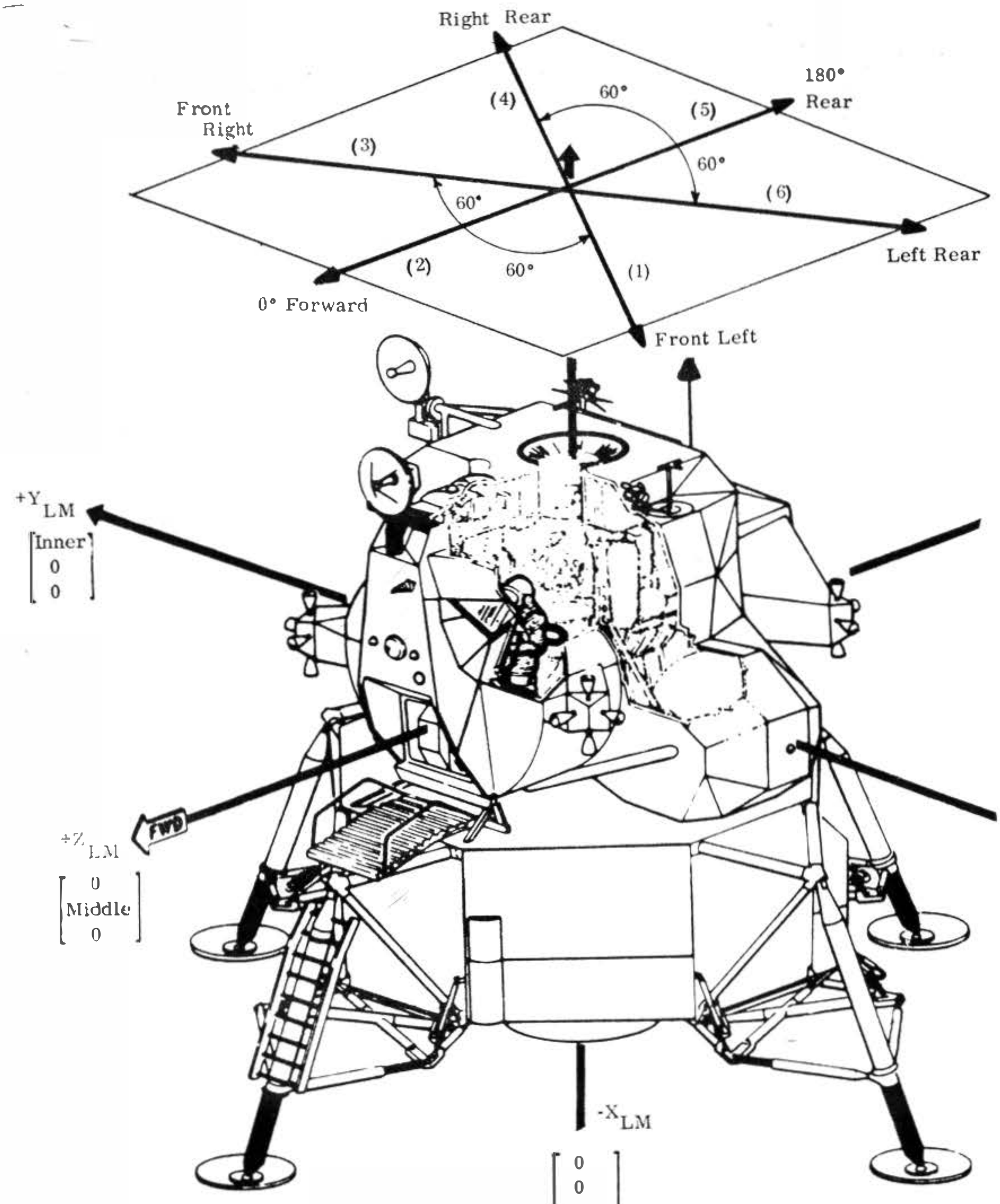

LUNAR SURFACE ALIGNMENT - P57

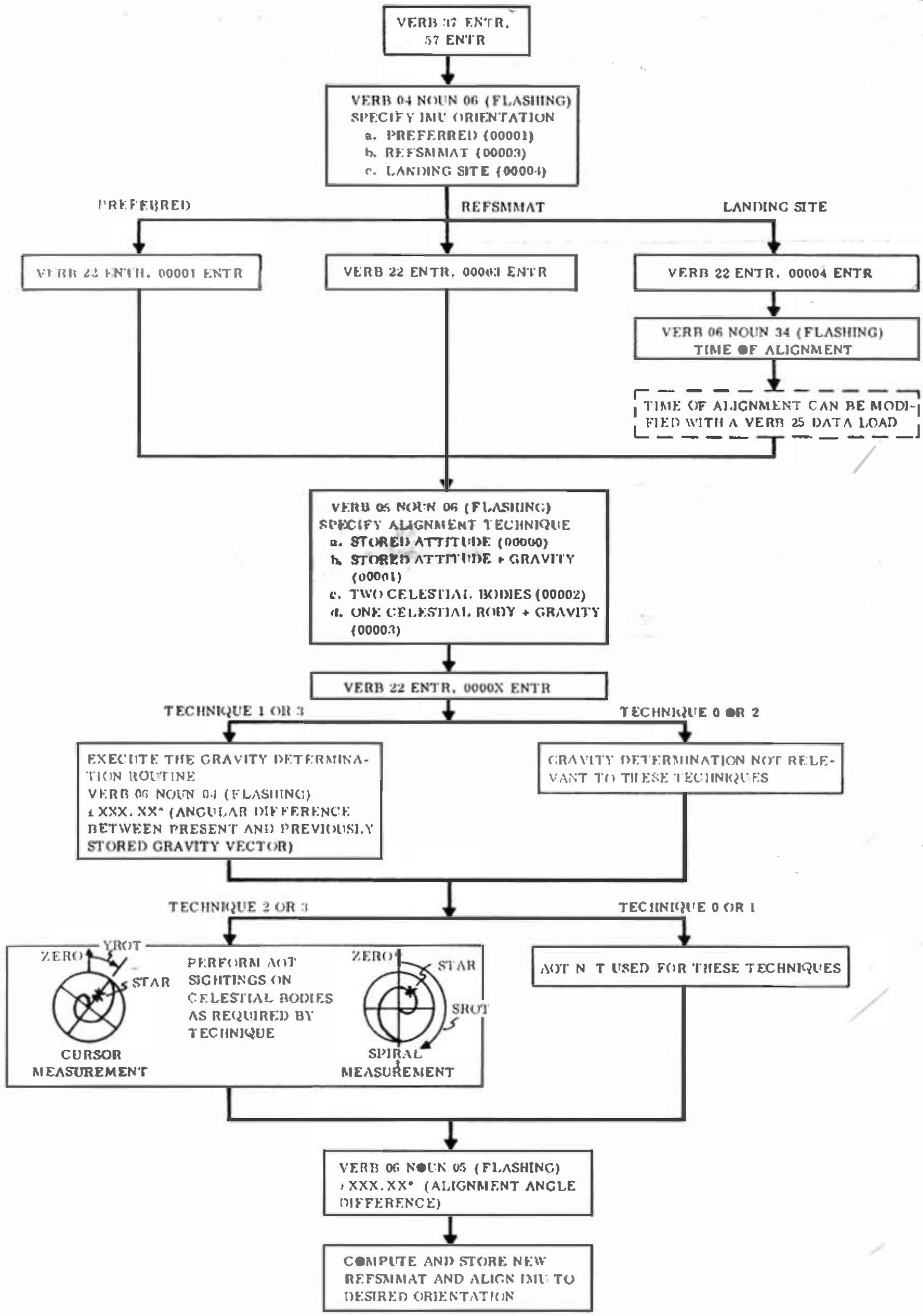

LUNAR SURFACE ALIGNMENT
GRAVITY DETERMINATION ROUTINE

1. COARSE ALIGN THE IMU TO THE FIRST ORIENTATION:

OGA ~ +42°
MGA ~ +35.25°
IGA ~ -42°

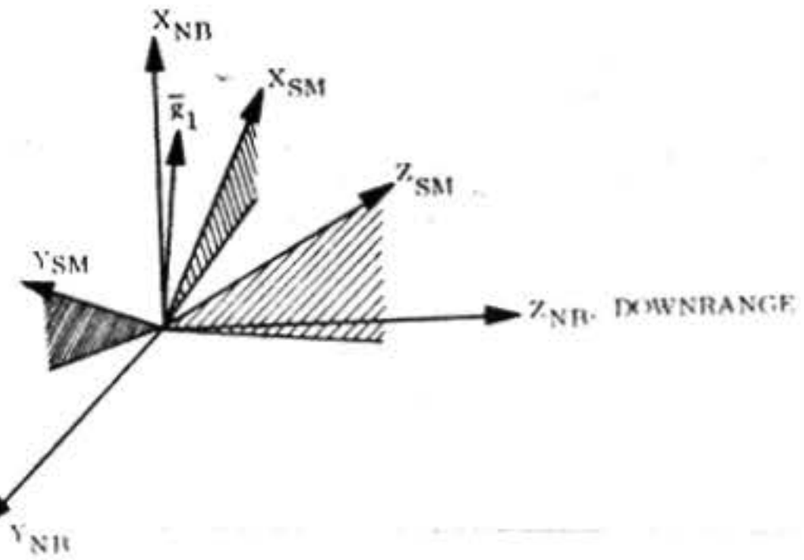

2. PLACE THE IMU IN AN INERTIAL MODE AND SAMPLE THE OUTPUT OF THE PIPA's OVER A PERIOD OF 40 SECONDS. ($PIPA_X$, $PIPA_Y$, $PIPA_Z$). FORM A UNIT VECTOR $\bar{g}_1$

$$\bar{g}_1 = \frac{PIPA_X\,\hat{X}_{SM} + PIPA_Y\,\hat{Y}_{SM} + PIPA_Z\,\hat{Z}_{SM}}{\sqrt{PIPA_X^{\,2} + PIPA_Y^{\,2} + PIPA_Z^{\,2}}}$$

WHERE $\bar{g}_1$ INDICATES THE DIRECTION OF THE FIRST ESTIMATE OF THE LUNAR GRAVITY VECTOR IN SM COORDINATES.

3. COARSE ALIGN THE STABLE MEMBER 180° ABOUT THE MEASURED GRAVITY VECTOR.

OGA ~ +138°
MGA ~ +35.25°
IGA ~ -42°

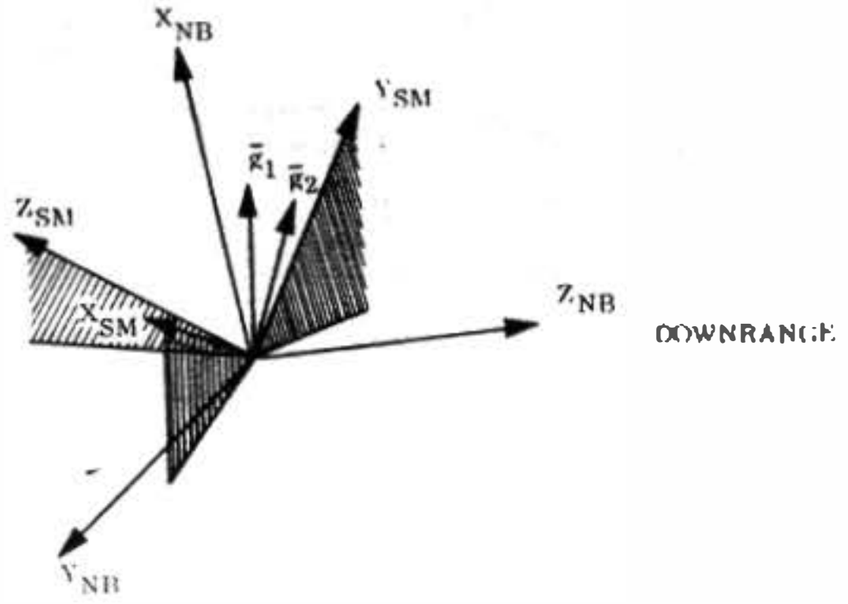

4. PLACE THE IMU IN AN INERTIAL MODE AND SAMPLE THE OUTPUT OF THE PIPA's OVER A PERIOD OF 40 SECONDS ($PIPA_X$, $PIPA_Y$, $PIPA_Z$). FORM A UNIT VECTOR $\bar{g}_2$

$$\bar{g}_2 = \frac{PIPA_X\,\hat{X}_{SM} + PIPA_Y\,\hat{Y}_{SM} + PIPA_Z\,\hat{Z}_{SM}}{\sqrt{PIPA_X^{\,2} + PIPA_Y^{\,2} + PIPA_Z^{\,2}}}$$

where $\bar{g}_2$ INDICATES THE DIRECTION OF THE SECOND ESTIMATE OF THE LUNAR GRAVITY VECTOR IN SM COORDINATES.

5. DEFINE A UNIT VECTOR $\bar{U}_C$ OUT OF $\bar{g}_1$ AND $\bar{g}_2$ WHICH REPRESENTS THE DIRECTION OF THE LUNAR GRAVITY VECTOR.

$$\bar{U}_C = \text{UNIT}\ (\bar{g}_1 + \bar{g}_2)$$

NOTE: THE $\bar{R}_{LS}$ VECTOR IS CONSIDERED TO BE COLINEAR WITH THE GRAVITY VECTOR.

LUNAR SURFACE ALIGNMENT – P57

TECHNIQUE	LOS DIRECTION IN BASIC REF. COORDINATES	ABSOLUTE INERTIAL REFERENCE
0	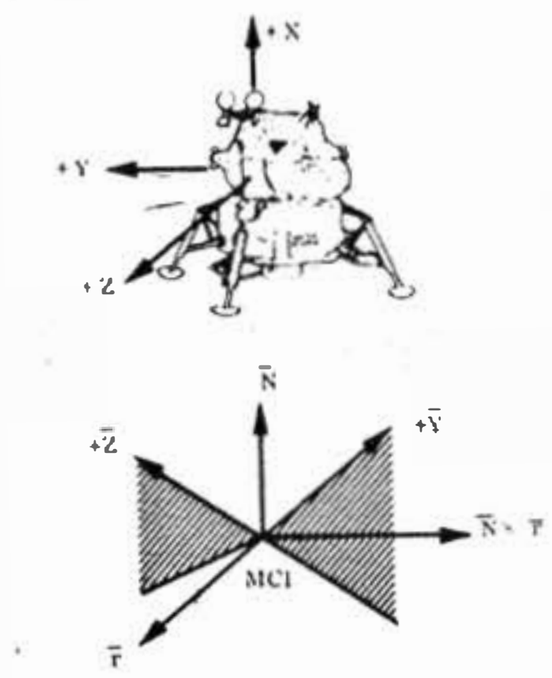 LM + $\bar{Y}$ and + $\bar{Z}$ stored from Previous alignment (P57, P58)	$\bar{S}_A$ (specified) $= \begin{bmatrix} \bar{Y} \\ (\bar{Y} \times \bar{Z}) \times \bar{Y} \\ \bar{Y} \times \bar{Z} \end{bmatrix} \bar{i}_{MCI} \stackrel{\Delta}{=} [A]\ \bar{i}_{MCI}$ $\bar{S}_B$ (measured) $= \begin{bmatrix} \bar{Y}_M \\ (\bar{Y}_M \times \bar{Z}_M) \times \bar{Y}_M \\ \bar{Y}_M \times \bar{Z}_M \end{bmatrix} \bar{i}_{SMCS} \stackrel{\Delta}{=} [B]\ \bar{i}_{SMCS}$ $\bar{S}_A = [A]\ \bar{i}_{MCI} = \bar{S}_B = [B]\ \bar{i}_{SMCS}$ $\bar{i}_{SMCS} = [REFSMMAT]\ \bar{i}_{MCI} = [B]^{-1}[A]\ \bar{i}_{MCI}$
1	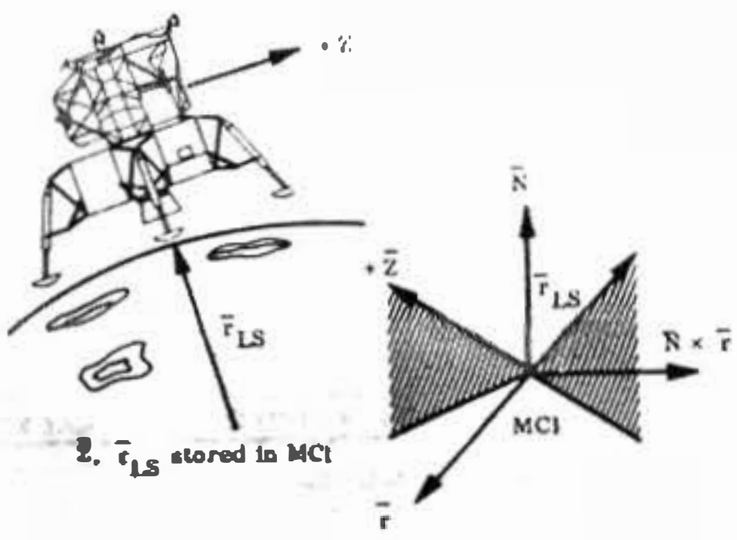 2. $\bar{r}_{LS}$ stored in MCI	$\bar{S}_A$ (specified) $= \begin{bmatrix} \bar{r}_{LS} \\ (\bar{r}_{LS} \times \bar{Z}) \times \bar{r}_{LS} \\ \bar{r}_{LS} \times \bar{Z} \end{bmatrix} \bar{i}_{MCI} \stackrel{\Delta}{=} [A]\ \bar{i}_{MCI}$ $\bar{S}_B$ (measured) $= \begin{bmatrix} \bar{s}_{LS} \\ (\bar{s}_{LS} \times \bar{Z}_M) \times \bar{s}_{LS} \\ \bar{s}_{LS} \times \bar{Z}_M \end{bmatrix} \bar{i}_{SMCS} \stackrel{\Delta}{=} [B]\ \bar{i}_{SMCS}$ $\bar{i}_{SMCS} = [REFSMMAT]\ \bar{i}_{MCI} = [B]^{-1}[A]\ \bar{i}_{MCI}$
2	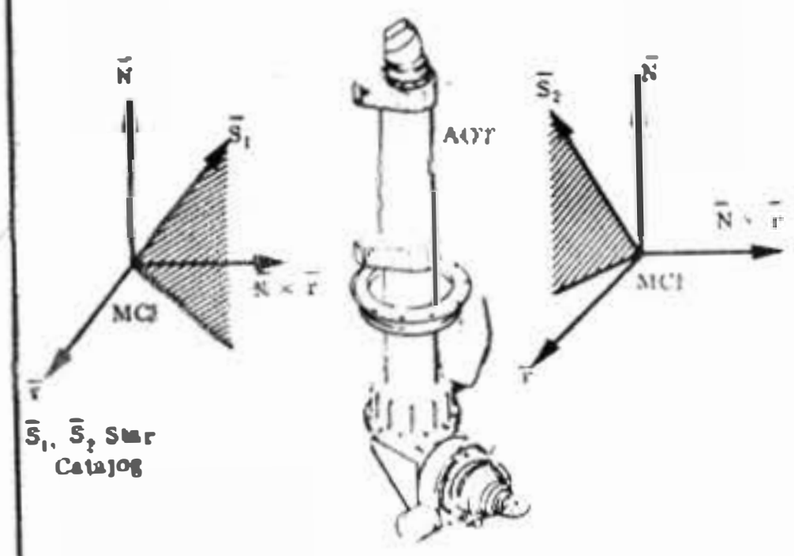 $\bar{S}_1$, $\bar{S}_2$ Star Catalog	$\bar{S}_A$ (specified) $= \begin{bmatrix} \bar{S}_1 \\ (\bar{S}_1 \times \bar{S}_2) \times \bar{S}_1 \\ \bar{S}_1 \times \bar{S}_2 \end{bmatrix} \bar{i}_{MCI} = [A]\ \bar{i}_{MCI}$ $\bar{S}_B$ (measured) $= \begin{bmatrix} \bar{s}_{1M} \\ (\bar{s}_{1M} \times \bar{s}_{2M}) \times \bar{s}_{1M} \\ \bar{s}_{1M} \times \bar{s}_{2M} \end{bmatrix} \bar{i}_{SMCS} = [B]\ \bar{i}_{SMCS}$ $\bar{i}_{SMCS} = [REFSMMAT]\ \bar{i}_{MCI} = [B]^{-1}[A]\ \bar{i}_{MCI}$
3	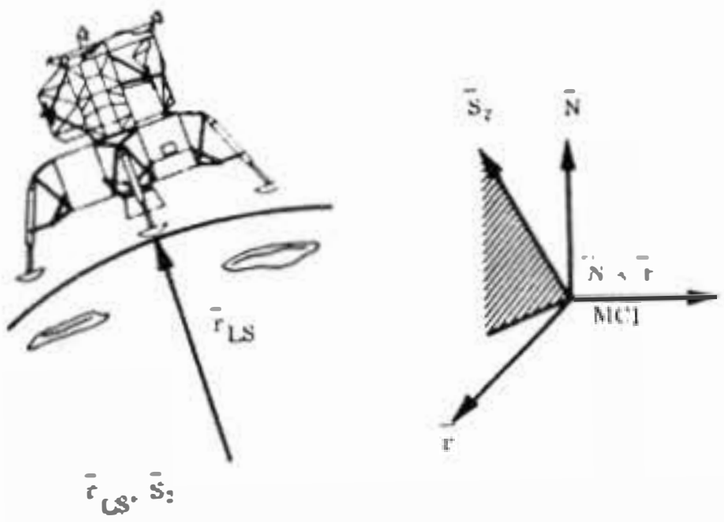 $\bar{r}_{LS}$, $\bar{S}_2$	$\bar{S}_A$ (specified) $= \begin{bmatrix} \bar{r}_{LS} \\ (\bar{r}_{LS} \times \bar{S}_2) \times \bar{r}_{LS} \\ \bar{r}_{LS} \times \bar{S}_2 \end{bmatrix} \bar{i}_{MCI} = [A]\ \bar{i}_{MCI}$ $\bar{S}_B$ (measured) $= \begin{bmatrix} \bar{s}_{LS} \\ (\bar{s}_{LS} \times \bar{S}_{2M}) \times \bar{s}_{LS} \\ \bar{s}_{LS} \times \bar{S}_{2M} \end{bmatrix} \bar{i}_{SMCS} = [B]\ \bar{i}_{SMCS}$ $\bar{i}_{SMCS} = [REFSMMAT]\ \bar{i}_{MCI} = [B]^{-1}[A]\ \bar{i}_{MCI}$

MCI – Moon Centered Inertial; SMCS – Stable Member Coordinate System

P24 — LANDMARK TRACKING

CSM Landmark Tracking Profile

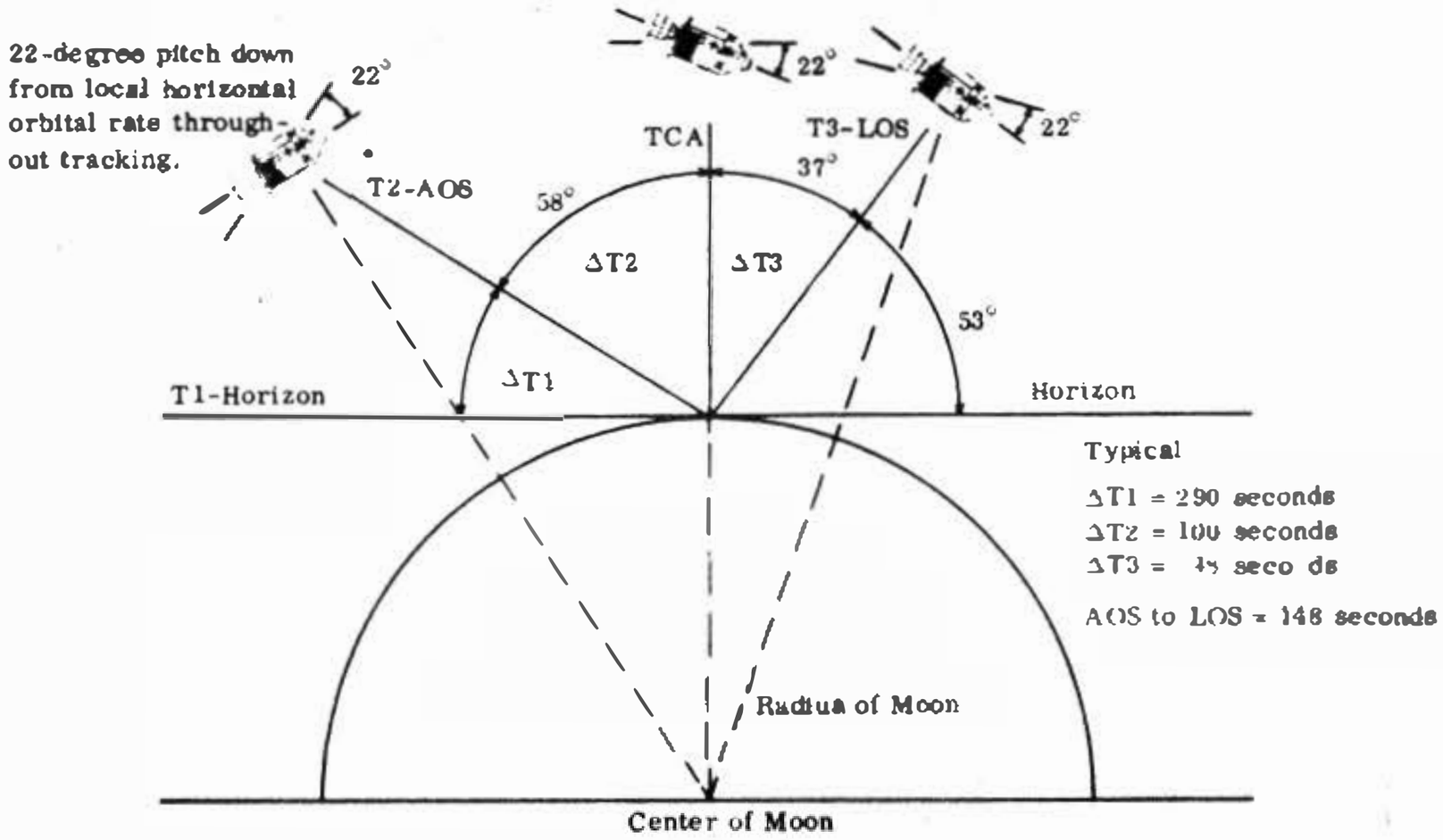

TGT: ( )

T_1 __ __ __:__ __:__ __

T_2 __ __ __:__ __:__ __

TCA __ __ __:__ __:__ __

T_3 __ __ __:__ __:__ __

R __ __ __ ° P __ __ __ ° Y __ __ __ ° (T2 ACQ)

N or S nmi __ __ / SA __ __ TA __ __ (T2 ACQ)

N89 LAT __ __.__ __ __

LONG/2 __ __.__ __ __

ALT __ __ __.__ __

TGT: ( )

T_1 __ __ __:__ __:__ __

T_2 __ __ __:__ __:__ __

TCA __ __ __:__ __:__ __

T_3 __ __ __:__ __:__ __

R __ __ __ ° P __ __ __ ° Y __ __ __ ° (T2 ACQ)

N or S nmi __ __ / SA __ __ TA __ __ (T2 ACQ)

N89 LAT __ __.__ __ __

LONG/2 __ __.__ __ __

ALT __ __ __.__ __

P24 RATE-AIDED OPTICS TRACKING

CMC - on (req)
ISS - on and aligned
SCS - on
BMAG MODE (3) - RATE 2
G&N PWR OPTICS - o
OPT ZERO - ZERO (verify)
OPT MODE - CMC

V37E 24E

F 06 89 LAT, LONG/2, ALT (0.001°, 0.001°, 0.01 nmi)
LOAD LMK COORDS
OPT ZERO - OFF
PRO

06 92 AUTO OPT SHF/TRUN (0.01°, 0.001°)
- F 05 09 00404 (TRUN > 90°)
- MNVR to acquire
- PRO
- or V34E, F 37

OPTICS MODE - M N

F 51 MARK REQU ST
MARK (as often as desired)
To terminate:
PRO

F 37 XXE
OPT ZERO - ZERO

P24 – LANDMARK TRACKING

MARK DATA

+	0	0				Hours		+	0	0			
+	0	0	0			Minutes	GET	+	0	0	0		
+	0					Seconds		+	0				
						P							
						Y	IMU Gimbal Angles (degree)						
						R							
+						Shaft		+					
+						Trunnion	SXT Angles (degree)	+					

+	0	0				Hours		+	0	0			
+	0	0	0			Minutes	GET	+	0	0	0		
+	0					Seconds		+	0				
						P							
						Y	IMU Gimbal Angles (degree)						
						R							
+						Shaft		+					
+						Trunnion	SXT Angles (degree)	+					

+	0	0				Hours		+	0	0			
+	0	0	0			Minutes	GET	+	0	0	0		
+	0					Seconds		+	0				
						P							
						Y	IMU Gimbal Angles (degree)						
						R							
+						Shaft		+					
+						Trunnion	SXT Angles (degree)	+					

NOTES:

P30–EXTERNAL ΔV

TEI 26

V37 Enter, 30 Enter

V06 N33 Flashing, Load Desired GETI

V06 N81 Flashing, Load Desired ΔV

						Purpose											
			/			Prop/Guidance						/					
+						Weight (lb)	N47	+									
	0	0				PTrim (degrees)	N48		0	0							
	0	0				YTrim (degrees)			0	0							
+	0	0				Hours	N33	+	0	0							
+	0	0	0			Minutes GETI		+	0	0	0						
+	0					Seconds		+	0								
						ΔV_X	N81										
						ΔV_Y LV											
						ΔV_Z (ft/s)											
X	X	X				R		X	X	X							
X	X	X				P IMU Gimbal Angles (deg)		X	X	X							
X	X	X				Y		X	X	X							
+						H_{Apogee} nmi	N44	+									
						$H_{Perigee}$ nmi											
+						ΔVT (ft/s)		+									
X	X	X				ΔT (min:s)		X	X	X							
X						ΔVC (ft/s)		X									
X	X	X	X			SXT Star		X	X	X	X						
+					0	SFT (degrees)		+					0				
+				0	0	TRN (degrees)		+				0	0				
X	X	X				BSS (Coas Star)		X	X	X							
X	X					SPA (Coas Pitch, deg)		X	X								
X	X	X				SXP (Coas X Pos, deg)		X	X	X							
	0					LAT (degrees)	N61		0								
						LONG (degrees)											
+						RTGO (nmi) EMS		+									
+						VIO (ft/s)		+									
						GET 0.05 g Hr:min:s											
						SET STARS											
X	X	X				R_{Align}		X	X	X							
X	X	X				P_{Align}		X	X	X							
X	X	X				Y_{Align}		X	X	X							
						ULLAGE											

NOTES

P30–EXTERNAL ΔV

TEI 37 & TEI 45

V37 Enter, 30 Enter

V06 N33 Flashing, Load Desired GETI

V06 N81 Flashing, Load Desired ΔV

						Purpose							
						Prop/Guidance							
+						Weight (lb)	N47	+					
	0	0				P_{Trim}	N48		0	0			
	0	0				Y_{Trim} (degrees)			0	0			
+	0	0				Hours	N33	+	0	0			
+	0	0	0			Minutes GETI		+	0	0	0		
+	0					Seconds		+	0				
						ΔV_X	N81						
						ΔV_Y LV							
						ΔV_Z (ft/s)							
X	X	X				R		X	X	X			
X	X	X				P IMU Gimbal Angles (deg)		X	X	X			
X	X	X				Y		X	X	X			
+						H_{Apogee}	N44	+					
						$H_{Perigee}$ nmi							
+						ΔVT (ft/s)		+					
X	X	X				BT (min:)		X	X	X			
X						ΔVC (ft/s)		X					
X	X	X	X			SXT Star		X	X	X	X		
+					0	SFT (degrees)		+					0
+				0	0	TRN (degrees)		+				0	0
X	X	X				BSS (Coas Star)		X	X	X			
X	X					SPA (Coas Pitch, deg)		X	X				
X	X	X				SXP (Coas X Pos, deg)		X	X	X			
	0					LAT	N61		0				
						LONG (degrees)							
+						RTGO (nmi) EMS		+					
+						VIO (ft/s)		+					
						GET 0.05 g Hr:min:s							
						SET STARS							
X	X	X				R_{Align}		X	X	X			
X	X	X				P_{Align}		X	X	X			
X	X	X				Y_{Align}		X	X	X			
						ULLAGE							

NOTES:

P30—EXTERNAL ΔV

Plane Change & TEI 52

V37 Enter, 30 Enter

V06 N33 Flashing, Load Desired GETI

V06 N81 Flashing, Load Desired ΔV

						Purpose									
		/				Prop/Guidance				/					
+						Weight (lb)	N47	+							
	0	0				P_{Trim}	N48		0	0					
	0	0				Y_{Trim} (degrees)			0	0					
+	0	0				Hours	N33	+	0	0					
+	0	0	0			Minutes GETI		+	0	0	0				
+	0					Seconds		+	0						
						ΔV_X	N81								
						ΔV_Y LV									
						ΔV_Z (ft/s)									
X	X	X				R		X	X	X					
X	X	X				P (IMU Gimbal Angles (deg)		X	X	X					
X	X	X				Y		X	X	X					
+						H_{Apogee}	N44	+							
						$H_{Perigee}$ nmi									
+						ΔVT (ft/s)		+							
X	X	X				BT (min s)		X	X	X					
X						ΔVC (ft/s)		X							
X	X	X	X			SXT Star		X	X	X	X				
+					0	SFT (degrees)		+					0		
+				0	0	TRN (degrees)		+				0	0		
X	X	X				BSS (Coas Star)		X	X	X					
X	X					SPA (Coas Pitch, deg)		X	X						
X	X	X				SXP (Coas X Pos, deg)		X	X	X					
	0					LAT (degrees)	N61		0						
						LONG									
+						RTGO (nmi) EMS		+							
+						VIO (ft/s)		+							
						GET 0.05 g Hr, min s									
						SET STARS									
X	X	X				R_{Align}		X	X	X					
X	X	X				P_{Align}		X	X	X					
X	X	X				Y_{Align}		X	X	X					
						ULLAGE									

NOTES

P40 - SPS THRUSTING CSM
Plane Change

V37 Enter, 40 Enter

V50 N18 Flashing, Request Maneuver to FDAI R, P, Y Angles

V06 N18, FDAI R, P, Y Angles After Maneuver to Burn Attitude

V50 N75 Flashing, R1 = 00204, Gimbal Actuator Test Option

V06 N40, Time from Ignition, Velocity to be Gained, Measured Change in Velocity

V99 N40 Flashing, Engine On Enable Request

V06 N40, Time from Cutoff, Velocity to be Gained, Measured Change in Velocity

V16 N40 Flashing, Final Values at Engine Cutoff

V16 N85 Flashing, Body Axes Residuals (to be Nulled)

V37 Flashing, V82 Enter

V16 N44 Flashing, Apogee Altitude, Perigee Altitude, Time to Freefall to 35 K ft Moon Orbit, 300 K ft Earth Orbit

50-18	Roll	
	Pitch	(deg)
	Yaw	
06-18	Roll	
	Pitch	(deg)
	Yaw	
06-40	TFI (min:s)	
	VG (ft/s)	
	ΔVM (ft/s)	
06-40	TFC (min:s)	
	VG (ft/s)	
	ΔVM (ft/s)	
16-40	TFC (min:s)	
	VG (ft/s)	
	ΔVM (ft/s)	
85	X	Residuals (ft/s)
	Y	
	Z	
85	X	TRIM (ft/s)
	Y	
	Z	
44	HA (nmi)	
	HP (nmi)	
	TFF (min:s)	

LUNAR O BIT PLANE CHANGE

EVENT	BT/ΔV	G.E.T.	PROPULSION/ GUIDANCE	PRETHRUST TARGETING
LOPC	16.5/308.6	165:12:50.6	SPS/G&N EXT ΔV (P-40)	P-30
↓	ΔV_x N85		+ x x	h
↓	ΔV_y RESIDUALS (ft/s)		+ x x x	min GET
↓	ΔV_z (BODY AXES)		+ x ↓	s

— — — •— $V_{x_{TRIM}}$ — — —•— $V_{y_{TRIM}}$ — — —•— $V_{z_{TRIM}}$ (ft/s)

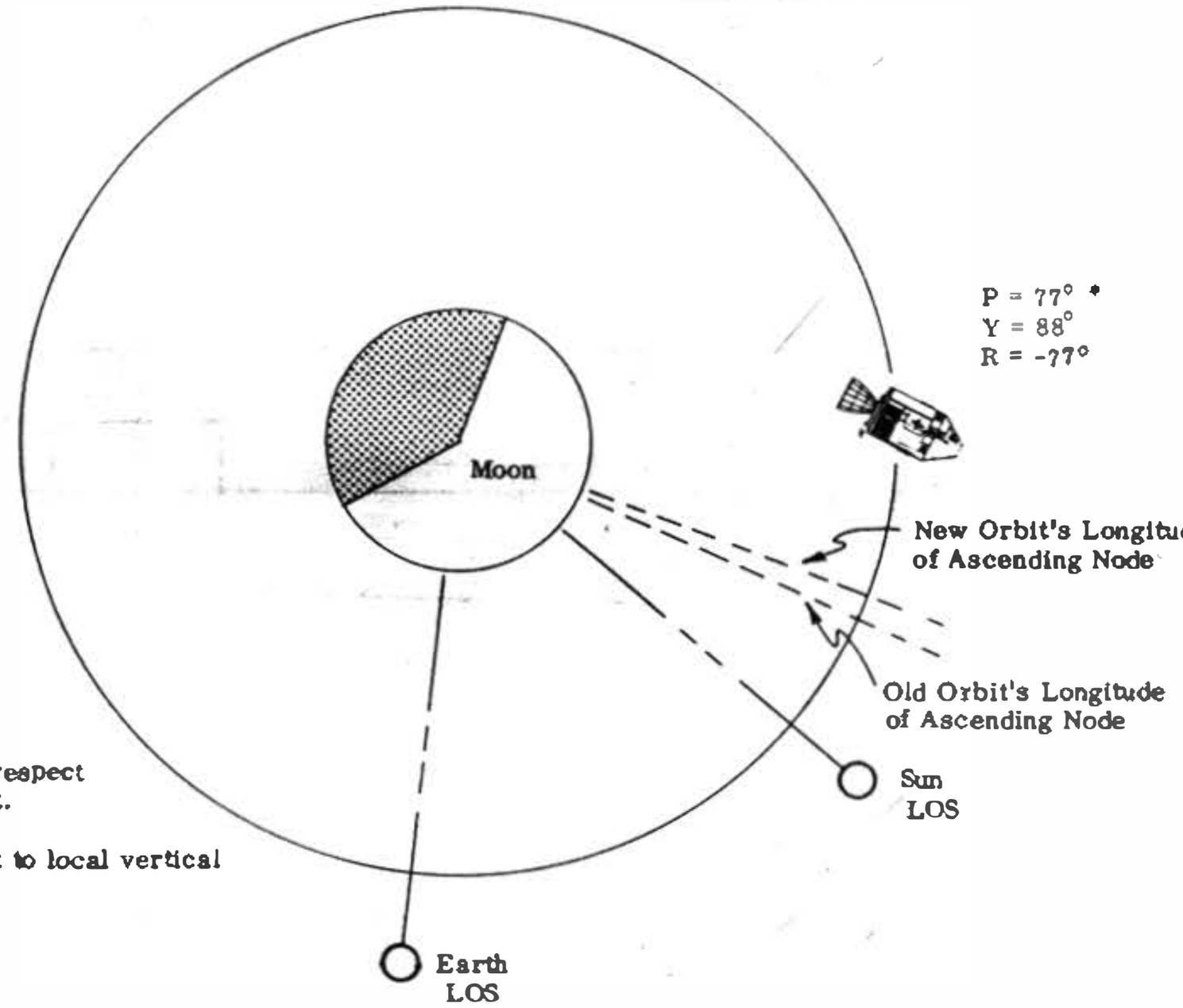

Note: Shadow is with respect to the CSM orbit.

* P, Y, R with respect to local vertical

P24 – LANDMARK TRACKING

CSM Landmark Tracking Profile

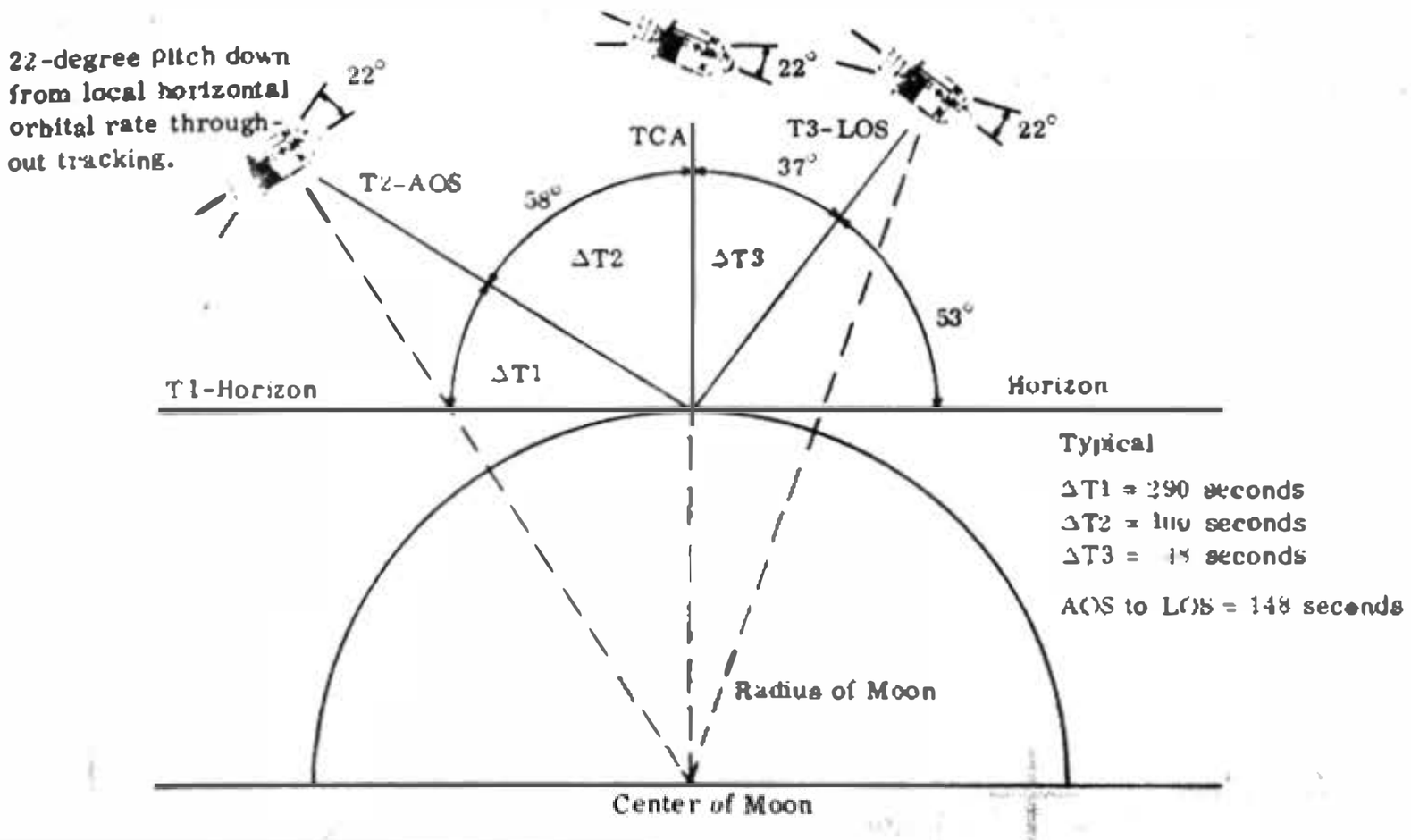

TGT: ( )

T_1 __ __ __ : __ __ : __ __

T_2 __ __ __ : __ __ : __ __

TCA __ __ __ : __ __ : __ __

T_3 __ __ __ : __ __ : __ __

R __ __ __ ° P __ __ __ ° Y __ __ __ ° (T2 ACQ)

N or S nmi __ __ / SA __ __ TA __ __ (T2 ACQ)

N89 LAT __ __ . __ __ __

LONG/2 __ __ . __ __ __

ALT __ __ __ . __ __

TGT: ( )

T_1 __ __ __ : __ __ : __ __

T_2 __ __ __ : __ __ : __ __

TCA __ __ __ : __ __ : __ __

T_3 __ __ __ : __ __ : __ __

R __ __ __ ° P __ __ __ ° Y __ __ __ ° (T2 ACQ)

N or S nmi __ __ / SA __ __ TA __ __ (T2 ACQ)

N89 LAT __ __ . __ __ __

LONG/2 __ __ . __ __ __

ALT __ __ __ . __ __

P24 RATE-AIDED OPTICS TRACKING

CMC - on (req)
ISS - on and aligned
SCS - on
BMAG MODE (3) - RATE 2
G&N PWR OPTICS - on
OPT ZERO - ZERO (verify)
OPT MODE - CMC

V37E 24E

F 06 89 LAT, LONG/2, ALT (0.001°, 0.001°, 0.01 nmi)
LOAD LMK COORDS
OPT ZERO - OFF
PRO

06 92 AUTO OPT SHF/TRUN (0.01°, 0.001°)
- F 05 09 00404 (TRUN > 90°)
- MNVR to acquire
- PRO
- or V34E, F 37

OPTICS MODE - MAN

F 51 MARK REQUEST
MARK (as often as desired)
To terminate:
PRO

F 37 XXE
OPT ZERO - ZERO

P24 -- LANDMARK TRACKING

MARK DATA

+	0	0				Hours		+	0	0			
+	0	0	0			Minutes	GET	+	0	0	0		
+	0					Seconds		+	0				
						P							
						Y	IMU Gimbal Angles (degree)						
						R							
+						Shaft	SXT Angles (degree)	+					
+						Trunnion		+					

+	0	0				Hours		+	0	0			
+	0	0	0			Minutes	GET	+	0	0	0		
+	0					Seconds		+	0				
						P							
						Y	IMU Gimbal Angles (degree)						
						R							
+						Shaft	SXT Angles (degree)	+					
+						Trunnion		+					

+	0	0				Hours		+	0	0			
+	0	0	0			Minutes	GET	+	0	0	0		
+	0					Seconds		+	0				
						P							
						Y	IMU Gimbal Angles (degree)						
						R							
+						Shaft	SXT Angles (degree)	+					
+						Trunnion		+					

NOTES:

P22–LUNAR SURFACE NAVIGATION

V37 Enter, 22 Enter

V04 N06 Flashing

R1: 00012

R2: 0000X (1–CSM will not change orbit,
2–CSM will change orbit)

V06 N33 Flashing

Time of ascent (h, min, 0.01 s)

V50 N25 Flashing (if RR Auto mode not selected)

R1: 00201 – switch RR mode to Auto

X	0	0	0	0		Option Code		N06	X	0	0	0	0	
+	0	0				Hours	Time of Ascent	N33	+	0	0			
+	0	0	0			Minutes			+	0	0	0		
+	0					Seconds			+	0				
X	0	0	0	0		Option Code		N06	X	0	0	0	0	
+	0	0				Hours	Time of Ascent	N33	+	0	0			
+	0	0	0			Minutes			+	0	0	0		
+	0					Seconds			+	0				
X	0	0	0	0		Option Code		N06	X	0	0	0	0	
+	0	0				Hours	Time of Ascent	N33	+	0	0			
+	0	0	0			Minutes			+	0	0	0		
+	0					Seconds			+	0				

NOTES:

P12–POWERED ASCENT

V37 Enter, 12 Enter

V06 N33 Flashing

Time of ascent (h, min, 0.01 s)

V06 N76 Flashing

Downrange velocity, radial velocity, crossrange (0.1 ft/s, 0.1 ft/s, 0.1 nmi)

V50 N25 Flashing

R1: 0 0 2 0 3 (switch Guidance Control to PGNS, Mode to Auto, Thrust Control to Auto)

V06 N74 Flashing

TFI, yaw after rise, pitch after rise (min/s, 0.01 deg, 0.01 deg)

V99 N74 Flashing

Engine on enable

V06 N94 Flashing

VGX, HOOT, H (0.1 ft/s, 0.1 ft/s, ft)

V16 N85 Flashing

VGX (LM), VGY (LM), VGZ (LM) (0.1 ft/s)

V82 Enter

V04 N06 Flashing

R1: 0 0 0 0 2

R2: 0 0 0 0 X (1–this vehicle, 2–other vehicle)

V16 N44 Flashing

Apocenter altitude, pericenter altitude, TFF (0.1 nmi, 0.1 nmi, min/s)

+	0	0				Hours	N33	+	0	0			
+	0	0	0			Minutes TIG of Ascent		+	0	0	0		
+	0					Seconds		+	0				
+						Desired Downrange Velocity (ft/s)	N76	+					
+						Desired Radial Velocity (ft/s)		+					
	0					*Crossrange Distance (nmi)			0				
						047 Sine of Azimuth Angle (Octal) (AGS)							
						063 Cosine of Azimuth Angle (Octal (AGS)							
						224/226 Semimajor Axis at Insertion (k ft) (AGS)							
						231 Landing Site Radius (k ft) (AGS)							
						465 Target Radial Rate at Insertion (ft/s) (AGS)							
						373 TIG of TPI (min) (AGS)							
+	0	0				Hours	N37	+	0	0			
+	0	0	0			Minutes TIG of TPI		+	0	0	0		
+	0					Seconds		+	0				
+						LM Weight (lb)		+					
+						CSM Weight (lb)		+					

*Load 8 nmi if crossrange is greater than 8 nmi.

NOTES:

P32—COELLIPTIC SEQUENCE INITIATION (CSI)

V37 Enter, 32 Enter

V06 N11 Flashing

TIG of CSI (h, min, 0.01 s)

V06 N55 Flashing

Number of apsidal crossings, elevation angle for TPI (+0 0 0 0 X, 0.01 deg)

V06 N37 Flashing

TIG of TPI (h, min, 0.01 s)

V16 N45 Flashing

Marks, time from ignition, middle gimbal angle (marks, min/s, 0.01 deg)

V06 N75 Flashing

ΔH (CDH), ΔT (CDH–CSI), ΔT (TPI–CDH) (0.1 nmi, min/s, min/s)

V06 N81 Flashing

ΔV_X (LV), ΔV_Y (LV), ΔV_Z (LV) of CSI (0.1 ft/s)

V06 N82 Flashing

ΔV_X (LV), ΔV_Y (LV), ΔV_Z (LV) of CDH (0.1 ft/s)

V90 Enter (out of plane correction in final computation only)

V06 N16 Flashing

Time of event (h, min, 0.01 s)

V06 N90 Flashing

Y, YDOT, PSI (0.01 min, 0.1 ft/s, 0.01 deg)

+	0	0				Hours	TIG for CSI (LGC)	N11	+	0	0			
+	0	0	0			Minutes			+	0	0	0		
+	0					Seconds			+	0				
N55 (+00001) No. of Apsidal Crossings (+026.60) Elevation Angle (+130.00) Central Angle															
+	0	0				Hours	TIG for TPI (LGC)	N37	+	0	0			
+	0	0	0			Minutes			+	0	0	0		
+	0					Seconds			+	0				
+	0					ΔV_X	Components of ΔV in local vertical coordinates (ft/s)	N81	+	0				
	0					ΔV_Y				0				
+						373	TIG for CSI (AGS) (minutes)		+					
+						275	TIG for TPI (AGS) (minutes)		+					
410 +1 (AGS-CSI), 605 + 00777 (desired cotan of LOS angle between LM and CSM at desired TPI in octal), 416 + 1 (compute CSI with CDH at ½ orbit after CSI), 623 + 0 (orient Z body-axis parallel to CSM orbit plane)															
	0					ΔV_X	Components of ΔV in local vertical coordinates used in AGS (ft/s)	N86		0				
	0					ΔV_Y				0				
	0					ΔV_Z				0				

TIG-2 AUDIO MODE (BOTH) - VOX
400+1E GUID STEERING
RESET WATCH
TIG-1 MASTER ARM - ON
367R
START CAMERA
- :10 ABORT STAGE - PUSH(AT T=0
ENG ARM - ASC FOR AGS)
- :05 PRO
+ :01 ENG START-PUSH (IF AUTO IGN)
CHECK S-BD ANT
+1:00 YAW RIGHT 40°
623+1
N76E (VH, Vv, ΔR)
V16 N77E (Tgo, VY, VI)
KEY RLSE
+5:00 STOP CAMERA
CB(11) PGNS:RNOZ RDR - CLOSE
AGC .7, AUTO TRK
TM R/R, 317R
COMPARE RR, AGS, CSM
500R
500 FPS MAIN SOV (2) - OPEN.
ASC FEED 2 (2) - CLOSE.
200 FPS ENG ARM-OFF(IF IGN WAS AUTO)
0 FPS ABORT STAGE-RESET
ENG STOP - PUSH

PRO.NULL RESIDUALS (2FPS)
PRO
STOP OET, RESET WATCH
COPY GET
ENG STOP - RESET
P00
AMCC FOR TRIM OR TWEAK

FOR NO VOICE
PGNS,AGS DIFFER <10 FPS,
TRIM ACTIVE SYSTEM
PGNS,AGS DIFFER >10 FPS,
TRIM SYSTEM THAT AGREES
WITH RR
(10° IN OHW) (0° YAW)

V82

ASCENT MONITOR

TFI	..	OHW (OYAW)	VGX	H DOT	H	SBD	He
0:00			32.0	0.0	0	77/-66	3050
0:10			-110.0	53.0	300		2970
0:30	308	40	4210.0	91.0	1800		2830
1:00	305	38	4130.0	124.0	5100	144/-18	2640
1:30	302	36	4030.0	151.0	9200		2470
2:00	299	34	3880.0	170.0	14000	147/-13	2300
2:30	296	32	3690.0	183.0	19400		2140
3:00	292	29	3470.0	189.0	25000	150/-8	1980
3:30	289	27	3210.0	190.0	30700		1820
4:00	285	25	2910.0	184.0	36300	154/-2	1670
4:30	281	22	2570.0	173.0	41700		1520
5:00	278	19	2200.0	156.0	46600	158/4	1380
5:30	273	17	1780.0	135.0	51000		1240
6:00	269	14	1320.0	109.0	54700	163/10	1100
6:30	265	11	820.0	81.0	57500		970
7:00	260	8	290.0	50.0	59500	169/16	840
7:15	257	6	0.0	32.0	60100	171/18	770

NO AUTO IGNITION
WITHIN 10 SEC:
1. GUID CONT-AGS
STILL NO IGNITION
1. GUID CONT-PGNS
2. ENG START-PUSH

MANUAL ASCENT (WILL NOMINALLY BE TARGETED 9 MIN LATE)
CONFIGURATION NOMINAL EXCEPT:
MODE CONT - ATT HOLD
PROFILE NOMINAL EXCEPT:
7-STEP FOR DIRECT MODE

TFI	FOAI	OHW
0:00	0	
0:15	305	38
2:00	295	31
3:00	290	28
4:00	285	24
5:00	275	18
6:00	265	11
7:00	260	8

MSFN WILL CALL 2° PITCH AND ROLL BIAS COMMANDS FROM GROUND TRACKING AT ABOUT 7 MIN.

ASC QTY LITE-MAIN SOV(2)-OPEN↑
ASC FEED 2 (2) - CLOSE↓

SHUTDOWN
ENGINE ARM OFF
STANDBY TO RESET ABORT STAGE Pb AND DEPRESS ENGINE STOP Pb ON CALL FROM MSFN

INSERTION THROUGH TPI

TIME	RANGE	ROOT
LO+5	140	1660
LO+6	152	813
LO+7	155	-175
INS	155	-446
1+00	150	-443
2+00	146	-439
3+00	142	-435
4+00	137	-430
5+00	133	-425
6+00	129	-420
7+00	125	-414
8+00	121	-407
9+00	117	-400
10+00	113	-393

INSERTION 171:44:39

V82 | ATT CONT-PULSE

V76 | MODE CONT-AUTO

AGS MODE CONT-ATT HOLD

RR MODE-LGC

RATE/ERR MON(2)-RNDZ ROR *

SHFT/TRUN :S

RATE SCALE 5°/SEC

RNG/ALT MON-RNG/RNG RT

*VHF ANT-FWD *

*400+2 Z-AXIS STEER * SS

*410+4 TPI EXEC *

*616+00005 ULLAGE *

*623+0 *

*COPY AGS DATA *

AUDIO MODE(2)-ICS/PTT *

/INV 2, CB INV 1-OPEN *

CB(11) & (16) EO: LOGIC PWR-OPEN

CB(11) ECS CABIN FAN1-CLOSE

+1 GO/NO-GO FOR TWEAK

P47 FDAI (0,257,40)

*404+0, 405+0, 406+0 *

*MONITOR 470, 471, 472 *

+2 TWEAK | 171:46:39 |

ΔV'S | | | |

P47 FDAI (0,242,0) OR 10° OMM

*404+0, 405+0, 406+0 *

*MONITOR 470, 471, 472 *

40 LM BAILOUT @ L.O.+12:10

TIG	171:49:39	
ΔVX	41.5	

P20, AUTO MNVR | RR-AUTO TRACK

V80, MAX N49(2.00,12.0)

P34 TGT TPI

*VERIFY PGNS WITH MSFN *

*V47, 414+1, 400+3 *

*400+2 Z-AXIS STEER *

*417+1 (/417+0) *

*411+1 START AUTO *

*310R SET DET *

*303R @ TPI *

V82

V83 SET ORDEAL (35NM)

*317R, 440R, 277R *

V48, 12012

LM WT _____

33 CSM BAILOUT GET P76 PAD

*EXT LTG-TRACK *

30 CHART R/RDOT | | | }R

27 RDOT }R

M=15, V32

24 RDOT }R

*COMPARE CMC,AGS,VHF/RR *

*POLAR PLOT @ 90 NM *

21 RDOT }R

18 RDOT }R

*CHECK RCS, EPS, ECS *

LOS

15 RDOT }R

*514+0 *

*515+4 YAW STEER VEC *

*516+0 *

*MATCH INDICATED ANGLES *

*TRACK MODE-SLEW *

*S-BD ANT-AFT *

SET P _____ (+105) *

Y _____ (+67) *

*BIOMED-OFF, PCM-HI *

*UPLINK SQUELCH-ENABLE *

12 RDOT }R

10 CHART R/RDOT/0 | | | |

9 RDOT }R

8 PRO-FINAL COMP

*411+0 STOP AUTO *

6 *COMPARE CMC, AGS *

CHECK TIG OF CSM

*/DET & APS BURN CARD *

P42 N86

PERFORM YAW/ROLL MANEUVER

*404+0, 405+0, 406+0 *

*623+1 *

*400+1 GUIO STEER | ATT CONT-MODE CONT

*410+5 LOAD ΔV

*500R _____ *

1:00 AGS MODE CONT-AUTO

:30 ABORT STAGE PB-PUSH

ENG ARM-ASC

:10 MANUAL ULLAGE

:05 PRO

:00 TPI | 172:29:39 |

ENG ARM-OFF

ABORT STAGE PB-RESET

NULL RESIDUALS

TPI THROUGH DOCKING

0 TPI 172:29:39
V76, AGS MODE CONT-ATT HOLD
P35 TGT MCC 1 — ATT CONT-PULSE / MODE CONT-AUTO
MAX N49(0.80,5.0)
V67 (+02000,+00020,+00005)
*400+2 Z-AXIS STEER *
*623+0 *
*417+1 (✓623+0) *
*411+1 START AUTO *
SR

2 $R
*410+4 TPI EXEC *
*373+TPI TIME +15 MIN *
*307+028.00 *

4 RDOT $R
6 RDOT $R
8 RDOT $R
9 CHART 0 *
10 RDOT $R
12 PRO FINAL COMP RDOT $R

13 CHART R/RDOT/0
*411+0 STOP AUTO *
370R TOTAL VEL MCC1
371R ΔV TPF
*404+0, 405+0, 406+0 *
P41, V77
*410+5 LOAD ΔV — ATT CONT-MODE CONT
*502R _____
:05 *472R/502R A/H
15 MCC1
NULL RESIDUALS

V76
P35 TGT MCC 2 — ATT CONT-PULSE / MODE CONT-AUTO
V93
*VERIFY PGNS (PCM-HI) *
*V47, 414+1, 400+3 *
*400+2 Z-AXIS STEER *
*411+1 START AUTO *
*EXT LTG-OFF *

17 $R
*410+4 TPI EXEC *
*373+TPI TIME +30 MIN *
*307+013.00 *

19 RDOT $R
21 RDOT $R
23 RDOT $R
24 CHART 0 *
25 RDOT $R
27 PRO-FINAL COMP RDOT $R

28 CHART R/RDOT/0
*411+0 STOP AUTO *
370R TOTAL VEL MCC2
371R ΔV TPF
*404+0, 405+0, 406+0 *
P41, V77
*410+5 LOAD ΔV — ATT CONT-MODE CONT
*502R _____
:05 *472R/502R A/H
30 MCC2
NULL RESIDUALS

AOS

P00
V48, 11002
P47, V63
*404+0, 405+0, 406+0 *
S-BD ANT-AFT,VERIFY COMM
*✓S-BD P _____ (+105) *
Y _____ (+67) *
*S-BD ANT-SLEW (>3.0) *
*TRACK MODE-AUTO *
*BIOMED-LEFT, PCM-HI *
*UPLINK SQUELCH-OFF *
TPI BURN REPORT

40 INITIATE BRAKING
30 FPS - 6000 FT
20 FPS - 3000 FT
10 FPS - 1500 FT
5 FPS - 600 FT
*SETUP CAMERA FOR *
* DOCKING: *
*LM3/DC/60/HCEX *
* (f11,250,FOCUS) 5 *
*LM3/DAC/10/CEX-ULC *
* (T8/250/10) 6FPS *
*MAG(BB)_____ FR#_____ *
V34, POD
V76 — ATT CONT-PULSE
MANEUVER/PICTURES OF SIMBAY
55 INITIATE DOCKING
COAS TO OVHD WINDOW
*EXT LTG-DOCK *
SHFT/TRUN ±50 *
V41N72 (+000,+320)
CB RR(2)-OPEN, V44
PITCH DOWN 90°, YAW LEFT 120°
V77 — ATT CONT-MODE CONT
65 CONTACT
THRUST TTCA +X UNTIL
CAPTURE OR 10 SEC
CONFIRM CAPTURE FROM CSM
MODE CONT (BOTH)-OFF

ASCENT DISPLAYS
(P12)

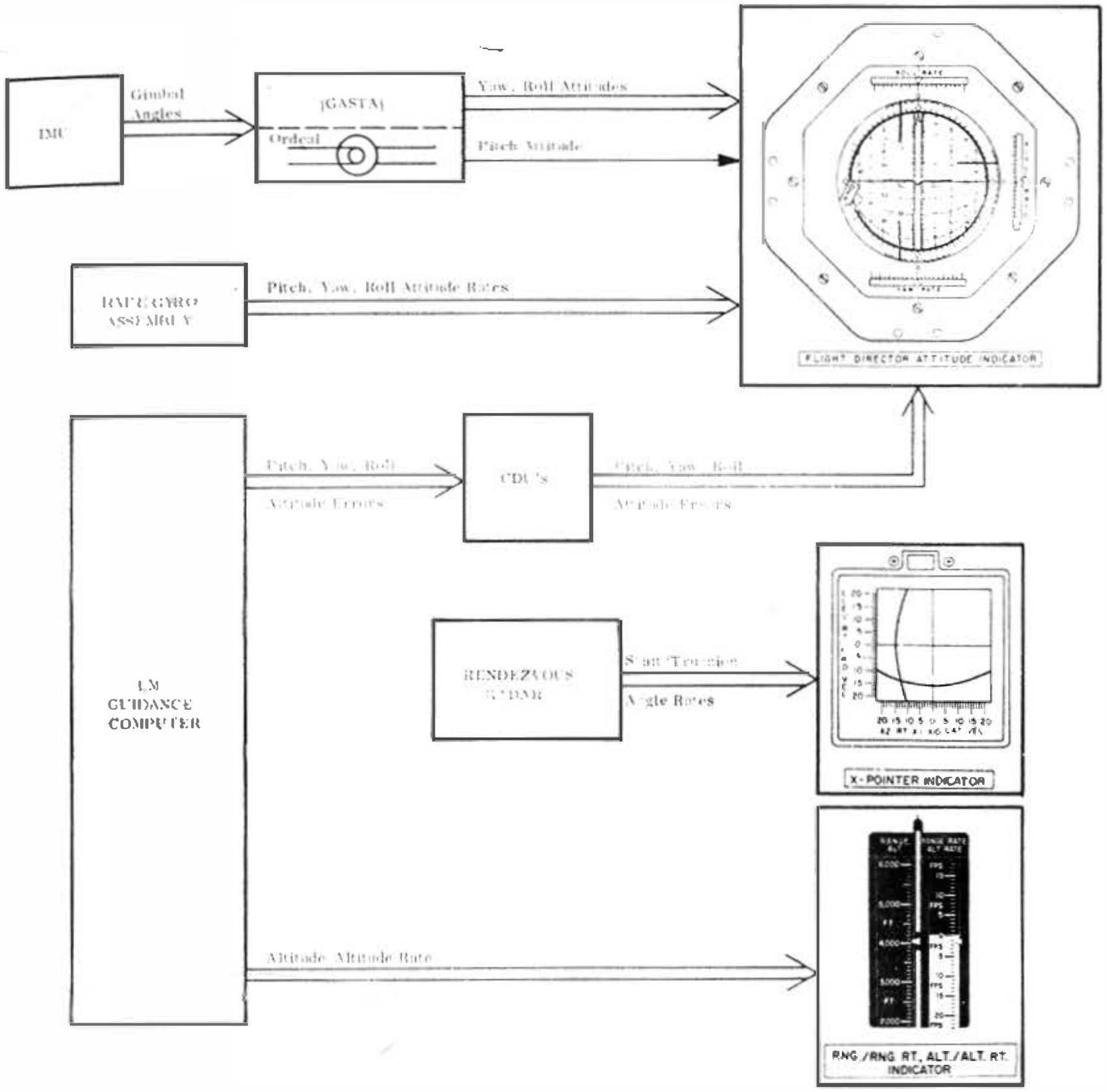

P12	V06N33	R1: Time of APS Ignition (HRS) R2: Time of APS Ignition (MIN) R3: Time of APS Ignition (SEC)	
P12	V06N76	R1: Downrange Velocity R2: Radial Velocity R3: Crossrange	
P12	V06N74	R1: Time From Ignition R2: Predicted FDAI Yaw Angle After Vertical Rise Phase R3: Predicted FDAI Pitch Angle After Pitchover Phase	
P12	V06N94	R1: VGX R2: Altitude Rate R3: Altitude	
P12	V16N77	R1: Time to Engine Cut Off R2: Velocity Normal to CSM Plane	
P12	V16N85	R1: Velocity-to-be-Gained (X-Axis) R2: Velocity-to-be-Gained (Y-Axis) R3: Velocity-to-be-Gained (Z-Axis)	

LM GUIDANCE COMPUTER

DSKY

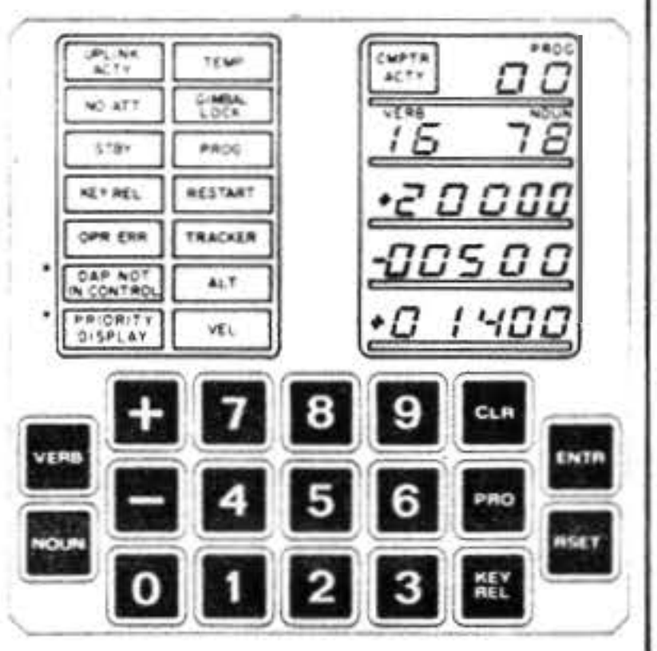

* Labels shown are not on lights.

ASCENT DISPLAYS

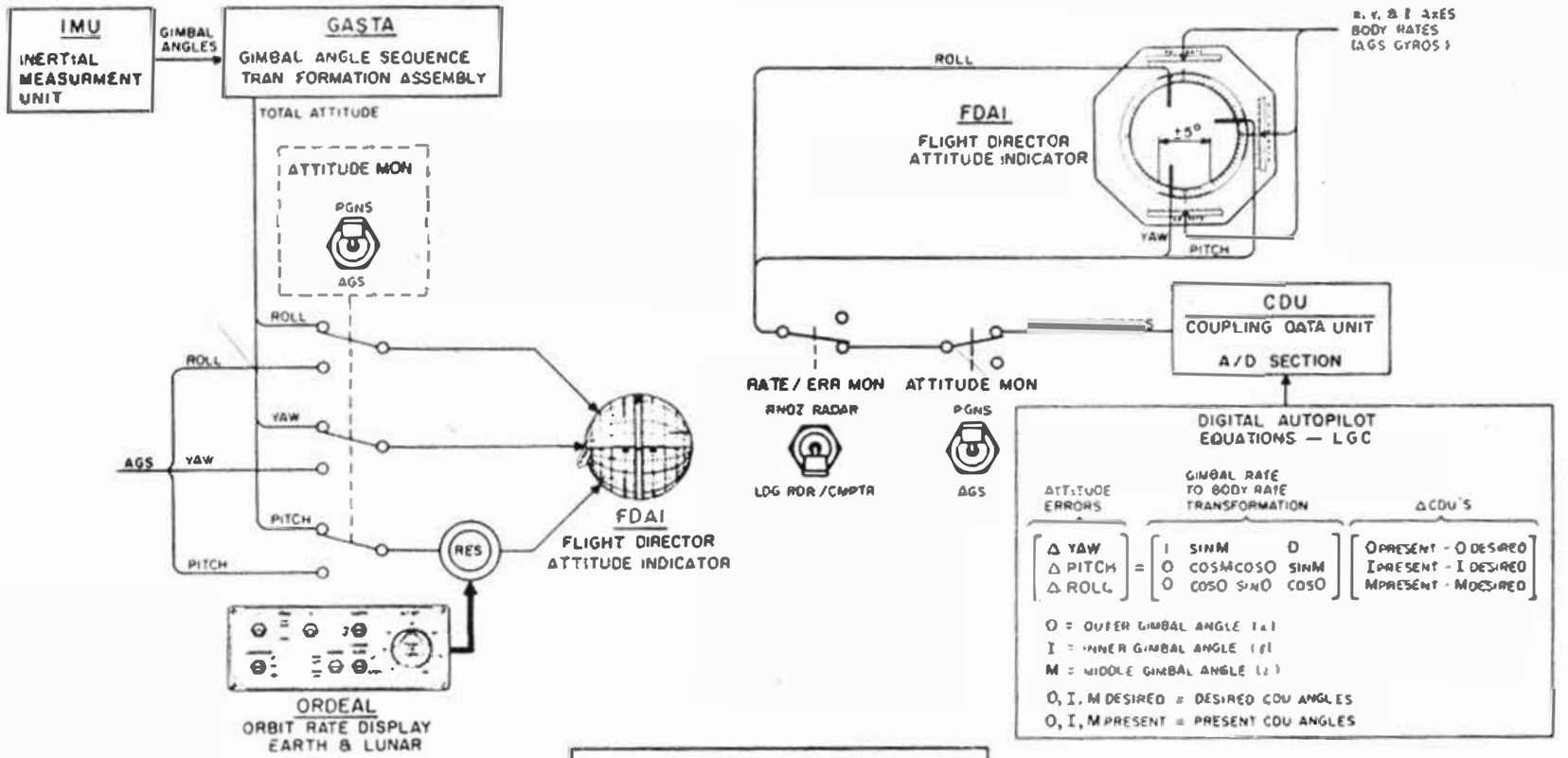

FLIGHT DIRECTOR ATTITUDE INDICATOR

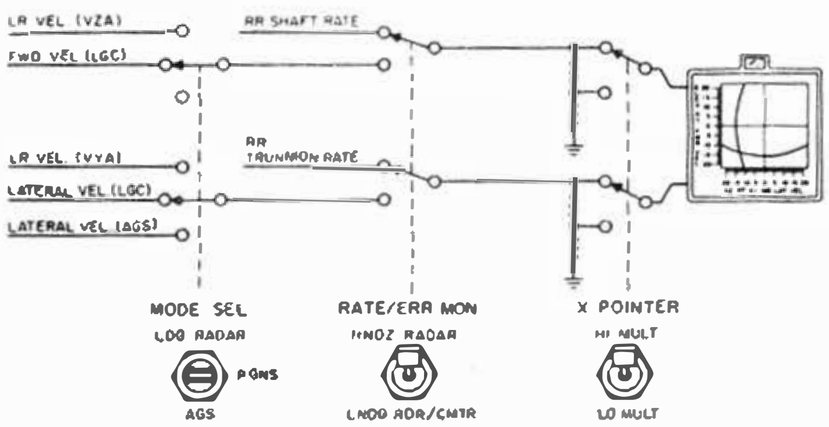

X POINTER INDICATOR

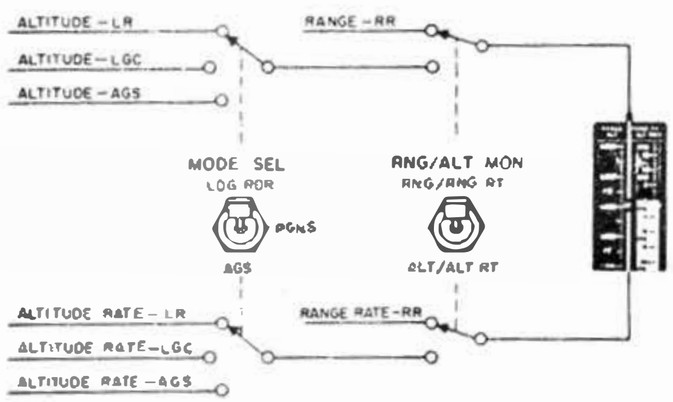

RANGE/RANGE RATE, ALTITUDE/ALTITUDE RATE INDICATOR

P12--POWERED ASCENT

V37 Enter, 12 Enter

V06 N33 Flashing
Time of ascent (h, min, 0.01 s)

V06 N76 Flashing
Downrange velocity, radial velocity, crossrange (0.1 ft/s, 0.1 ft/s, 0.1 nml)

V50 N25 Flashing
R1: 0 0 2 0 3 (switch Guidance Control to PGNS, Mode to Auto, Thrust Control to Auto)

V06 N74 Flashing
TFI, yaw after rise, pitch after rise (min/s, 0.01 deg, 0.01 deg)

V99 N74 Flashing
Engine on enable

V06 N94 Flashing
VGX, HDOT, H (0.1 ft/s, 0.1 ft/s, ft)

V15 N85 Flashing
VGX (LM), VGY (LM), VGZ (LM) (0.1 ft/s)

V82 Enter
V04 N06 Flashing
R1: 0 0 0 0 2
R2: 0 0 0 0 X (1--this vehicle, 2--other vehicle)
V16 N44 Flashing
Apocenter altitude, pericenter altitude, TFF (0.1 nmi, 0.1 nmi, min/s)

+	0	0				Hours	N33	+	0	0			
+	0	0	0			Minutes TIG of Ascent		+	0	0	0		
+	0					Seconds		+	0				
+						Desired Downrange Velocity (ft/s)	N76	+					
+						Desired Radial Velocity (ft/s)		+					
	0					*Crossrange Distance (nmi)			0				
						047 Sine of Azimuth Angle (Octal) (AGS)							
						063 Cosine of Azimuth Angle (Octal (AGS)							
						224/226 Semimajor Axis at Insertion (k ft) (AGS)							
						231 Landing Site Radius (k ft) (AGS)							
						465 Target Radial Rate at Insertion (ft/s) (AGS)							
						373 TIG of TPI (min) (AGS)							
+	0	0				Hours	N37	+	0	0			
+	0	0	0			Minutes TIG of TPI		+	0	0	0		
+	0					Seconds		+	0				
+						LM Weight (lb)		+					
+						CSM Weight (lb)		+					

*Load 8 nmi if crossrange is greater than 8 nmi.

NOTES:

LM INSERTION

EVENT	BT/ΔV	G.E.T.	PROPULSION/ GUIDANCE	PRETHRUST TARGETING
INSERTION	435.2/ 6,055.5	171:37:23.9	LM-APS/PGNS	P-12

RESIDUALS (ft/s)

									+	x	x		h
ΔV_x	N85			•		500			+	x	x	x	min GET
ΔV_y	PGNS			•	AGS	501							
ΔV_z				•		502			+	x		•	s

— — —•— $V_{x_{TRIM}}$ — — —•— $V_{y_{TRIM}}$ ———•— $V_{z_{TRIM}}$ (ft/s)

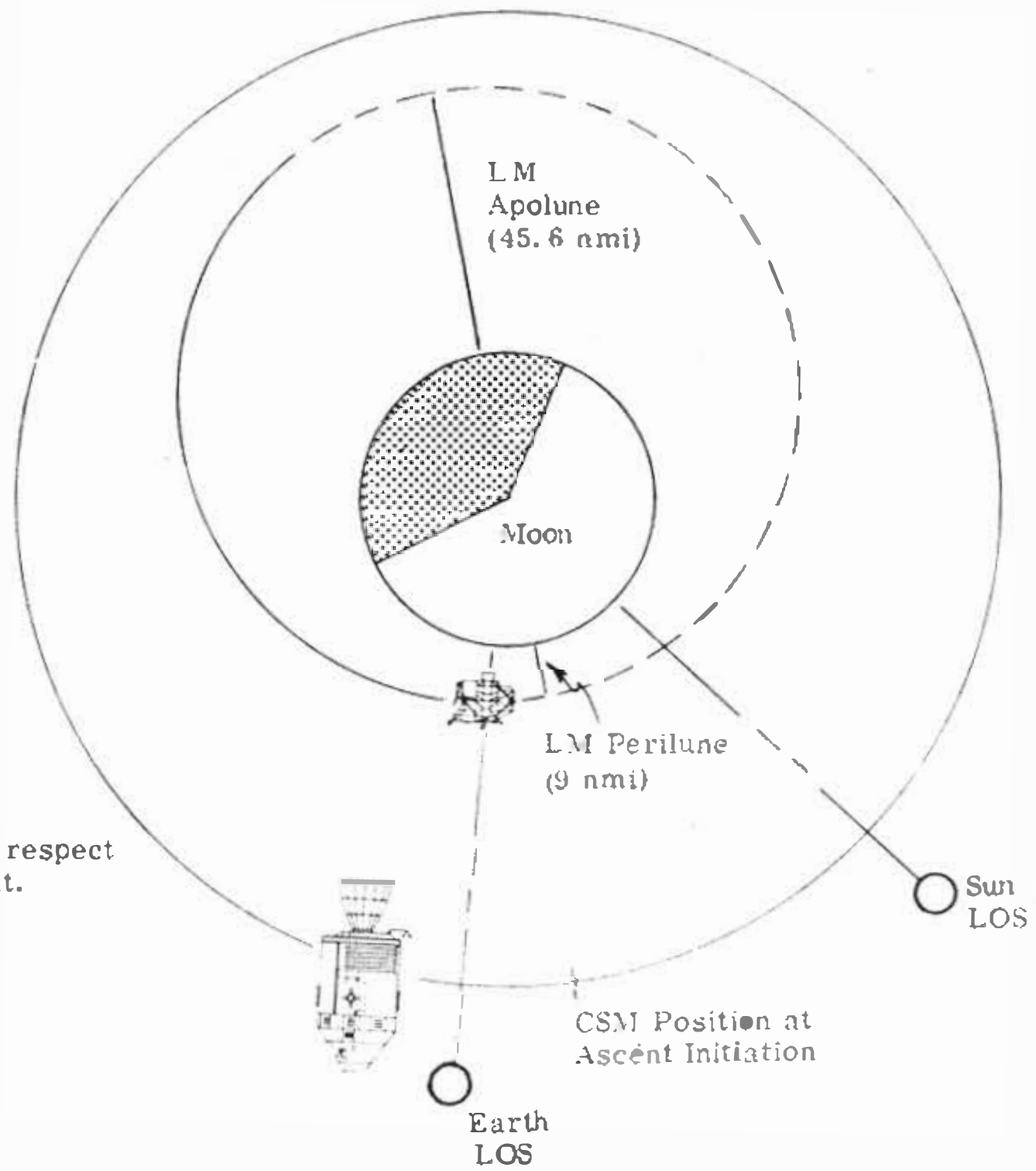

Note: Shadow is with respect to the CSM orbit.

ETHRUST ARGETING
P-12
GET
M (ft/s)

(XXX, XXX/XXX, XXX)

Yaw
Pitch
Radial
Roll

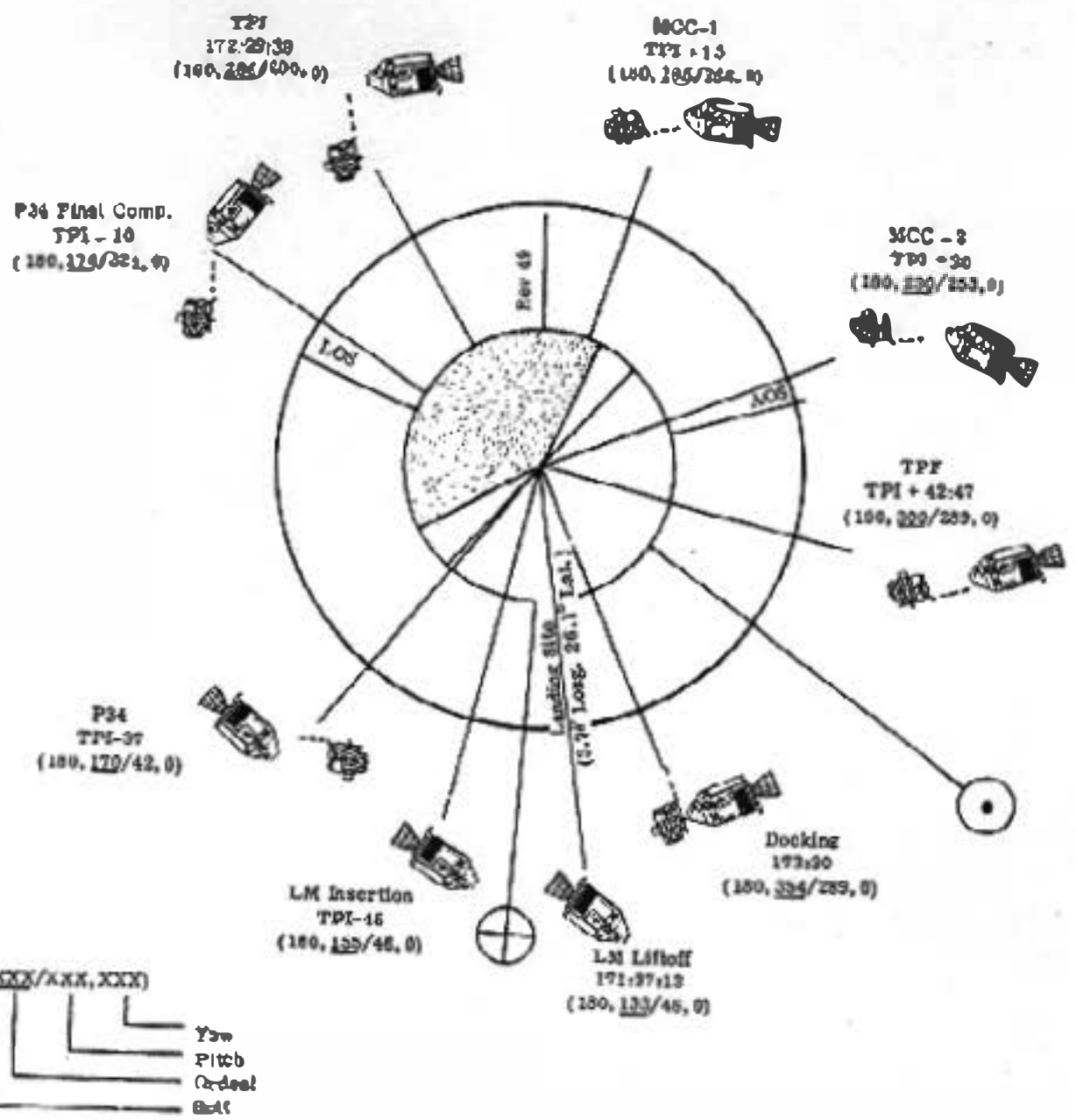

RENDEZVOUS DISPLAYS

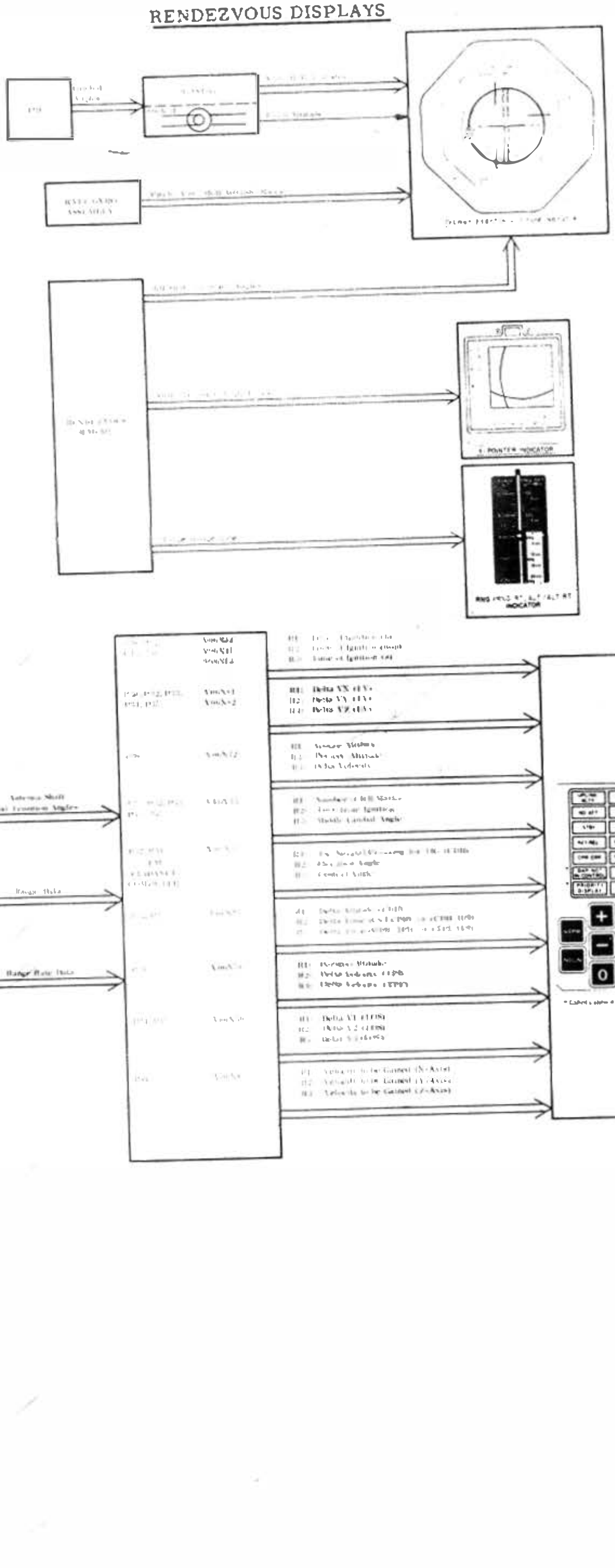

P34—TRANSFER PHASE INITIATION (TPI)

V37 Enter, 34 Enter

V06 N37 Flashing
TIG of TPI (h, min, 0.01 s)

V06 N35 Flashing
R2: Elevation angle, R3: Central angle (0.01 deg, 0.01 deg)

V16 N45 Flashing
Marks, time from ignition, middle gimbal angle (marks, min/s, 0.01 deg)

V06 N58 Flashing
Pericenter altitude, ΔV (TPI), ΔV (TPF) (0.1 nmi, 0.1 ft/s, 0.1 ft/s)

V06 N81 Flashing
ΔV_X (LV), ΔV_Y (LV), ΔV_Z (LV) for TPI (0.1 ft/s)

V06 N59 Flashing
ΔV_X (LOS), ΔV_Y (LOS), ΔV_Z (LOS) for TPI (0.1 ft/s)

+	0	0				Hours	TIG of TPI	N37	+	0	0			
+	0	0	0			Minutes			+	0	0	0		
+	0					Seconds			+	0				
N55 (+00000) Conic Integration, (+00000)* Elevation Angle (+130.00) Central Angle														
	0					ΔV_X (LV)	Components of ΔV in local vertical coordinates (ft/s)	N81		0				
	0					ΔV_Y (LV)				0				
	0					ΔV_Z (LV)				0				
+	0					Total ΔV required for TPI (ft/s)		N42	+	0				
X	X	X				R	LM FDAI inertial roll and pitch angles at TPI (deg)		X	X	X			
X	X	X				P			X	X	X			
+	0					Range at TIG-5 min (nmi)		N54	+	0				
	0					Range rate at TIG-5 min (ft/s)				0				
	0					ΔV_X (LOS)	Components of ΔV in line of sight coordinates (ft/s)	N59		0				
	0					ΔV_Y (LOS)				0				
	0					ΔV_Z (LOS)				0				
X	X					Burn time (min/s)			X	X				
307 + 043.00 (AGS—Desired Transfer Time)														

*P34 calculates Elevation Angle for given TIG of TPI

NOTES:

DIRECT TPI

PGNS				
: :	: :	: :	TIG TPI	N37
+ 0 .	+ 0 .	+ 0 .	HP (nmi)	N58
+ 0 .	+ 0 .	+ 0 .	ΔV TPI (ft/s)	
+ 0 .	+ 0 .	+ 0 .	ΔV TPF (ft/s)	
.	.	.	ΔVX	N81
.	.	.	ΔVY LV (ft/s)	
.	.	.	ΔVZ	
AGS				
0 .	0 .	0 .	θ LOS (deg)	303
0 .	0 .	0 .	ΔV TPI (ft/s)	370
0 .	0 .	0 .	ΔV TPF (ft/s)	371
.	.	.	ΔVX	450
.	.	.	ΔVY LV (ft/s)	451
.	.	.	ΔVZ	452
CSM				
: :	: :	: :	TIG TPI	N37
.	.	.	ΔVX	
.	.	.	ΔVY LV (ft/s)	
.	.	.	ΔVZ	
CHANGE SIGN; BIAS, ΔVX = -1.0, ΔVZ = +2.0				
		.	ELEV >	N55

BURN RULES

If two of three solutions agree, burn priority solution.

Priority of Solutions: PGNS, AGS, CMC, Charts

Guide Values: $\dot{X}$ = 3 ft/s, $\dot{Y}$ = 7 ft/s, $\dot{Z}$ = 9 ft/s

RR agrees with VHF where
ΔR = 0.01R + 0.5 nmi, ΔR is always ≥1 nmi.

If RR does not agree with VHF,
MSFN isolates failed system.

TRANSFER PHASE INITIATION

EVENT	BT/ΔV	G.E.T.	PROPULSION/ GUIDANCE	PRETHRUST TARGETING
TPI	12.6/73.7	172:29:29.1	LM-APS/PGNS LAMBERT (P-42)	P-34

RESIDUALS (ft/s)																		
ΔV_x	N85						AGS	500						+	x	x			
ΔV_y	PGNS							501						+	x	x	x		
ΔV_z								502						+	x				

h
min GET
s

— — —•— V_{xTRIM} — — —•— V_{yTRIM} — — —•— V_{zTRIM} (ft/s)

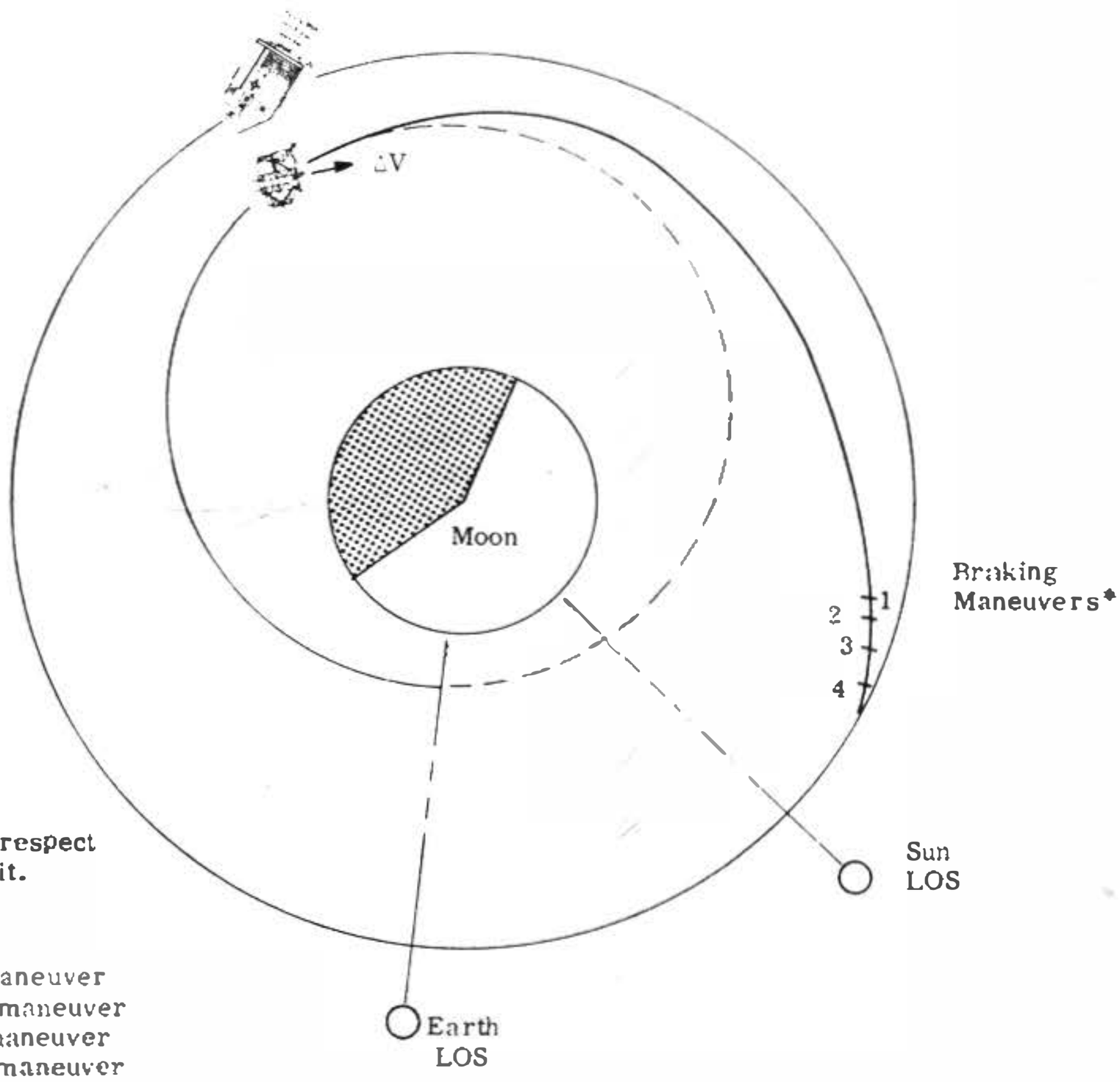

Note: Shadow is with respect to the CSM orbit.

* 1 - First braking maneuver
2 - Second braking maneuver
3 - Third braking maneuver
4 - Fourth braking maneuver

LM RENDEZVOUS FINAL PHASE

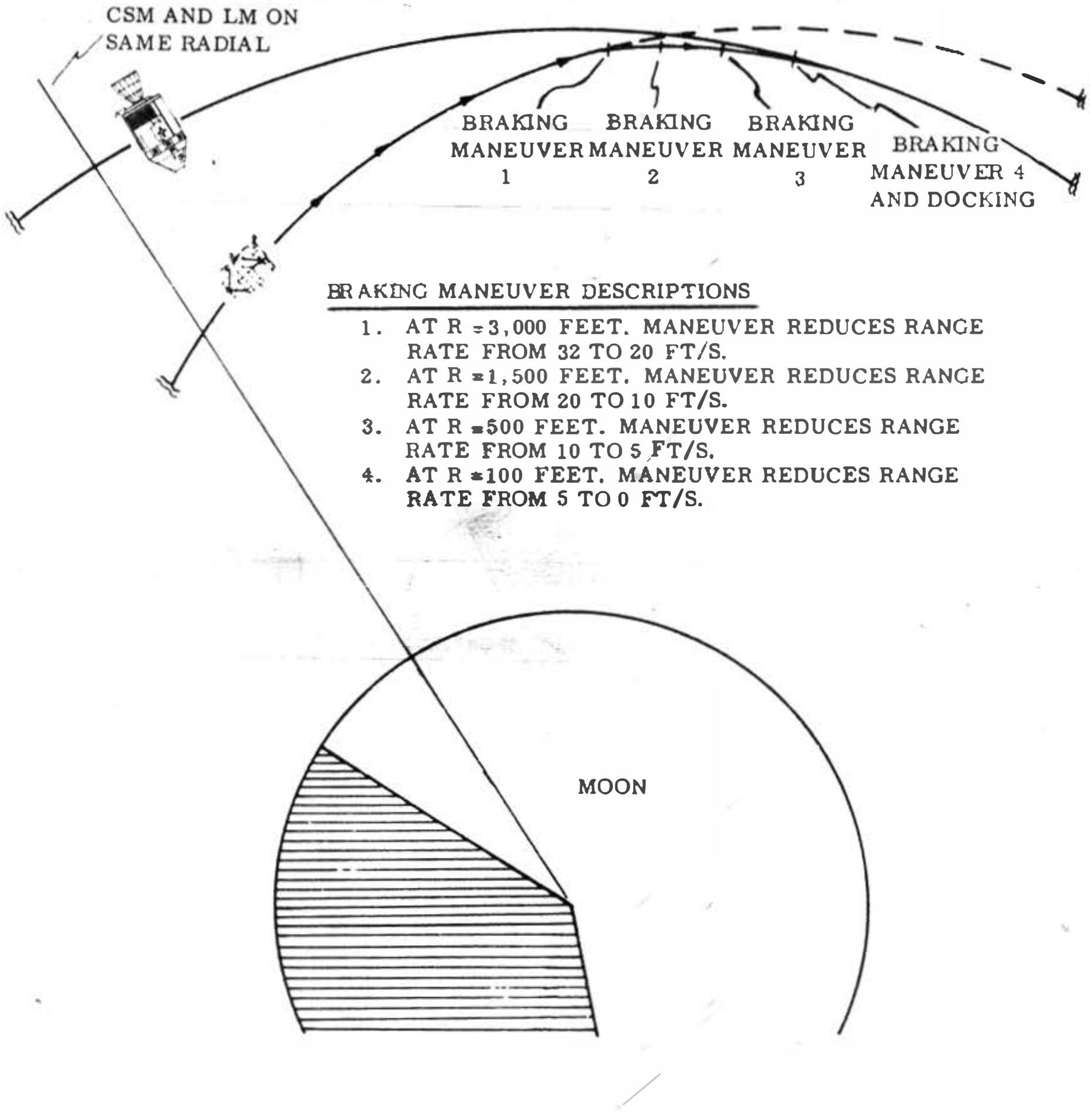

BRAKING MANEUVER DESCRIPTIONS

1. AT R = 3,000 FEET. MANEUVER REDUCES RANGE RATE FROM 32 TO 20 FT/S.
2. AT R = 1,500 FEET. MANEUVER REDUCES RANGE RATE FROM 20 TO 10 FT/S.
3. AT R = 500 FEET. MANEUVER REDUCES RANGE RATE FROM 10 TO 5 FT/S.
4. AT R = 100 FEET. MANEUVER REDUCES RANGE RATE FROM 5 TO 0 FT/S.

P30 – EXTERNAL ΔV (LM)

V37 Enter, 30 !Enter
V06 N33 Flashing, Load Desired GETI
V06 N81 Flashing, Load Desired ΔV

						Purpose							
+	0	0				Hours	N33	+	0	0			
+	0	0	0			Minutes GETI		+	0	0	0		
+	0					Seconds		+	0				
						ΔV_X	N81						
						ΔV_Y LV							
						ΔV_Z (ft/s)							
+						ΔVR (ft/s)		+					
X	X	X				BT (min:s)		X	X	X			
X	X	X				R FDAI Inertial		X	X	X			
X	X	X				P Angles (degrees)		X	X	X			
						ΔVX	N86						
						ΔV_Y AGS Targeting (ft/s)							
						ΔVZ							
+						H_{Apogee}	N42	+					
						$H_{Perigee}$ (nmi)							
+						ΔVT (ft/s)		+					

LM JETTISON PAD

+	0	0				Hours		+	0	0			
+	0	0	0			Minutes GETI JETT		+	0	0	0		
+	0					Seconds		+	0				
X	X	X				R	N22	X	X	X			
X	X	X				P IMU Gimbal Angles (deg)		X	X	X			
X	X	X				Y		X	X	X			

P99–LM DEORBIT BURN

						Time from Ignition	N40						
						Velocity to be Gained							
						Velocity Accumulated							
						Time from Ignition	N40						
						Velocity to be Gained							
						Velocity Accumulated							
						X	N85						
						Y Residuals (ft/s)							
						Z							

P30–EXTERNAL ΔV
CSM Separation

V37 Enter, 30 Enter

V06 N33 Flashing, Load Desired GETI

V06 N81 Flashing, Load Desired ΔV

						Purpose							
						Prop/Guidance							
+						Weight (lb)	N47	+					
	0	0				P_{Trim}	N48		0	0			
	0	0				Y_{Trim} (degrees)			0	0			
+	0	0				Hours	N33	+	0	0			
+	0	0	0			Minutes GETI		+	0	0	0		
+	0					Seconds		+	0				
						ΔV_X	N81						
						ΔV_Y LV							
						ΔV_Z ft/s							
X	X	X				R		X	X	X			
X	X	X				P IMU Gimbal Angles (deg)		X	X	X			
X	X	X				Y		X	X	X			
+						H_{Apogee}	N44	+					
						$H_{Perigee}$ nmi							
+						ΔVT (ft/s)		+					
X	X	X				BT (mins)		X	X	X			
X						ΔVC (ft/s)		X					
X	X	X	X			SXT Star		X	X	X	X		
+					0	SFT (degrees)		+					0
+				0	0	TRN (degrees)		+				0	0
X	X	X				BSS (Coas Star)		X	X	X			
X	X					SPA (Coas Pitch, deg)		X	X				
X	X	X				SXP (Coas X Pos, deg)		X	X	X			
	0					LAT	N61		0				
						LONG (degrees)							
+						RTGO (nmi) EMS		+					
+						VIO (ft/s)		+					
						GET 0.05 g Hr:min:s							
						SET STARS							
X	X	X				R_{Align}		X	X	X			
X	X	X				P_{Align}		X	X	X			
X	X	X				Y_{Align}		X	X	X			
						ULLAGE							

P47–THRUST MONITOR

V37 Enter, 47 Enter

V16 N83 Flashing, ΔV XYZ Body Axes

N62 Enter

V16 N62 Flashing, Inertial Velocity, Altitude Rate, Altitude

X	X	X				R			X	X	X		
X	X	X				P	IMU Gimbal Angles (degrees)		X	X	X		
X	X	X				Y			X	X	X		
X	X	X				BT	(min:s)		X	X	X		
						VI	(ft/s)						
						X		N83					
						Y	ΔV ft/s						
						Z							
						V	ft/s	N62					
						HDOT	ft/s						
						H	nmi						

NOTES:

P41 – RCS THRUSTING

CSM Separation

V37 Enter, 41 Enter

V50 N18 Flashing, Request Maneuver to FDAI R, P, Y Angles

V06 N18, FDAI R, P, Y Angles After Maneuver to Burn Attitude

V06 N85, X, Y, Z Body Axes Velocity to be Gained

V16 N85 (Average G on at TIG -30) Velocity to be Gained

V16 N85 Flashing, Body Axes Residuals (to be Nulled)

50-18	Roll	
	Pitch	(deg)
	Yaw	
06-18	Roll	
	Pitch	(deg)
	Yaw	
06-85	X	
	Y	VG (ft/s)
	Z	
16-85	X	
	Y	VG (ft/s)
	Z	
16-85	X	
	Y	Residuals (ft/s)
	Z	
	X	
	Y	Trim (ft/s)
	Z	

LM DEORBIT

EVENT	BT/ΔV	G.E.T.	PROPULSION/ GUIDANCE	PRETHRUST TARGETING
LM DEORBIT (RETROGRADE)	82.3/195.4	179:06:22.7	LM-RCS/PGNS EXT ΔV (P-42)	P-30

RESIDUALS (ft/s)							
ΔVx	N86		AGS	500		+ x x	h
ΔVy	PGNS			501		+ x x x	min GET
ΔVz				502		+ x	s
$V_{x_{TRIM}}$		$V_{y_{TRIM}}$				$V_{z_{TRIM}}$	(ft/s)

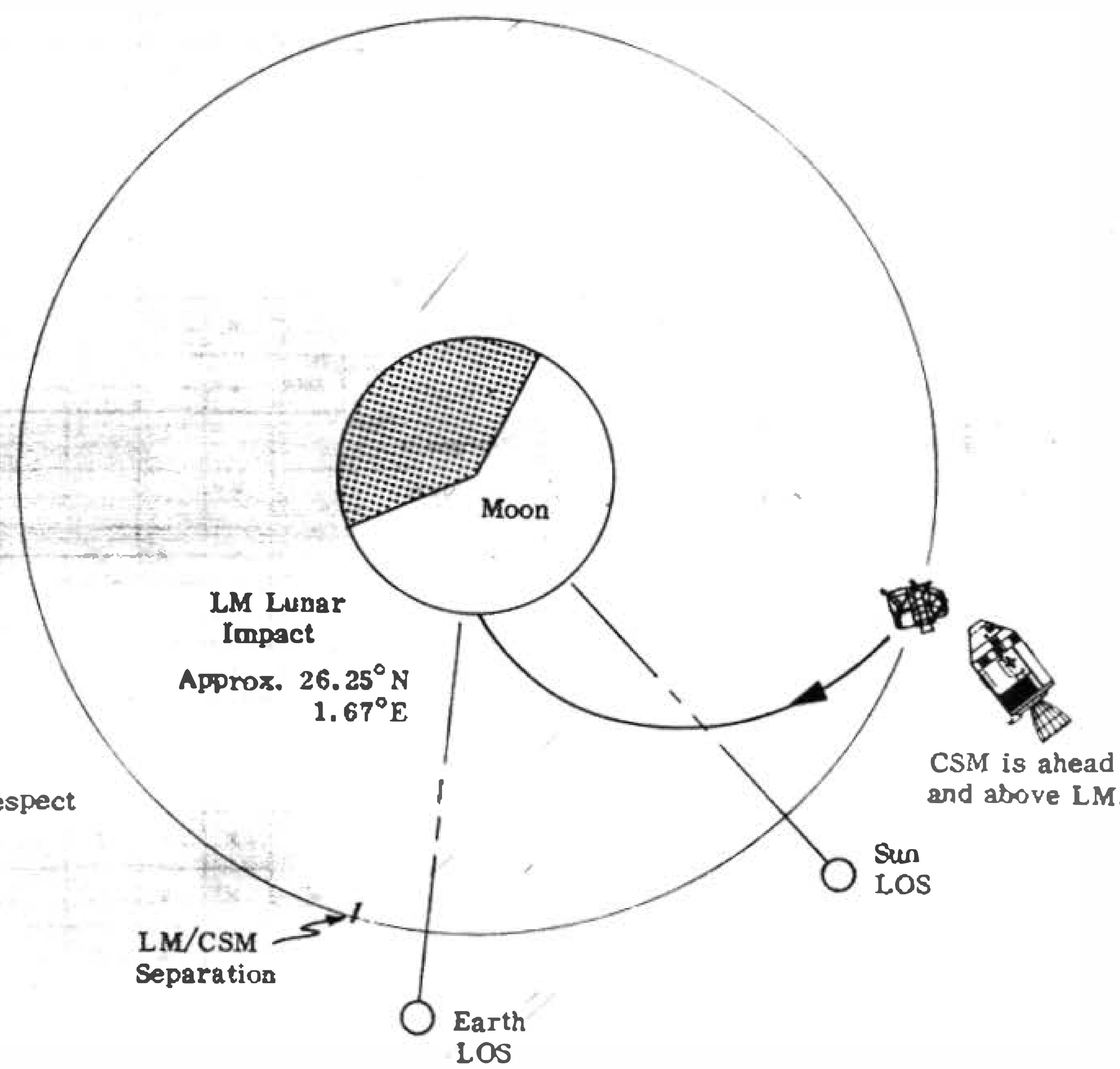

Note: Shadow is with respect to the CSM orbit.

P30–EXTERNAL ΔV

TEI 58 & TEI 60

V37 Enter, 30 Enter

V06 N33 Flashing, Load Desired GETI

V06 N81 Flashing, Load Desired ΔV

						Purpose							
		/				Prop/Guidance				/			
+						Weight (lb)	N47	+					
	0	0				PTrim	N48		0	0			
	0	0				YTrim (degrees)			0	0			
+	0	0				Hours	N33	+	0	0			
+	0	0	0			Minutes GETI		+	0	0	0		
+	0					Seconds		+	0				
						ΔV_X	N81						
						ΔV_Y LV							
						ΔV_Z (ft/s)							
X	X	X				R		X	X	X			
X	X	X				P IMU Gimbal Angles (deg)		X	X	X			
X	X	X				Y		X	X	X			
+						H_{Apogee}	N44	+					
						$H_{Perigee}$ nmi							
+						ΔVT (ft/s)		+					
X	X	X				ST (min:s)		X	X	X			
X						ΔVC (ft/s)		X					
X	X	X	X			SXT Star		X	X	X	X		
+					0	SFT (degrees)		+					0
+				0	0	TRN (degrees)		+				0	0
X	X	X				BSS (Coas Star)		X	X	X			
X	X					SPA (Coas Pitch, deg)		X	X				
X	X	X				SXP (Coas X Pos, deg)		X	X	X			
	0					LAT	N61		0				
						LONG (degrees)							
+						RTGO (nmi) EMS		+					
+						VIO (ft/s)		+					
						GET 05g Hr:min:s							
						SET STARS							
X	X	X				R_{Align}		X	X	X			
X	X	X				P_{Align}		X	X	X			
X	X	X				Y_{Align}		X	X	X			
						ULLAGE							

P30–EXTERNAL ΔV

TEI 62 & TEI 64

V37 Enter, 30 Enter

V06 N33 Flashing, Load Desired GETI

V06 N81 Flashing, Load Desired ΔV

						Purpose							
		/				Prop/Guidance				/			
+						Weight (lb)	N47	+					
	0	0				P_{Trim}	N48		0	0			
	0	0				Y_{Trim} (degrees)			0	0			
+	0	0				Hours	N33	+	0	0			
+	0	0	0			Minutes GETI		+	0	0	0		
+	0					Seconds		+	0				
						ΔV_X	N81						
						ΔV_Y LV							
						ΔV_Z (ft/s)							
X	X	X				R		X	X	X			
X	X	X				P IMU Gimbal Angles (deg)		X	X	X			
X	X	X				Y		X	X	X			
+						H_{Apogee}	N44	+					
						$H_{Perigee}$ nmi							
+						ΔVT (ft/s)		+					
X	X	X				BT (min:s)		X	X	X			
X						ΔVC (ft/s)		X					
X	X	X	X			SXT Star		X	X	X	X		
+					0	SFT (degrees)		+					0
+				0	0	TRN (degrees)		+				0	0
X	X	X				BSS (Coas Star)		X	X	X			
X	X					SPA (Coas Pitch, deg)		X	X				
X	X	X				SXP (Coas X Pos. deg)		X	X	X			
	0					LAT (de rees)	N61		0				
						LONG							
+						RTGO (nmi) EMS		+					
+						VIO (ft/s)		+					
						GET 0 05 g Hr min s							
						SET STARS							
X	X	X				R_{Align}		X	X	X			
X	X	X				P_{Align}		X	X	X			
X	X	X				Y_{Align}		X	X	X			
						ULLAGE							

NOTES

LB-134

P30 - EXTERNAL ΔV

TEI 69 & TEI 71

V37 Enter. 30 Enter

V06 N33 Flashing. Load Desired GETI

V06 N81 Flashing. Load Desired ΔV

						Purpose							
		/				Prop/Guidance				/			
+						Weight (lb)	N47	+					
	0	0				P_{Trim}	N48		0	0			
	0	0				Y_{Trim} (degrees)			0	0			
+	0	0				Hours	N33	+	0	0			
+	0	0	0			Minutes GETI		+	0	0	0		
+	0					Seconds		+	0				
						ΔV_X	N81						
						ΔV_Y LV							
						ΔV_Z (ft/s)							
X	X	X				R		X	X	X			
X	X	X				P IMU Gimbal Angles (deg)		X	X	X			
X	X	X				Y		X	X	X			
+						HApogee	N44	+					
						$H_{Perigee}$ nmi							
+						ΔVT (ft/s)		+					
X	X	X				ST (min s)		X	X	X			
X						ΔVC (ft/s)		X					
X	X	X	X			SXT Star		X	X	X	X		
+					0	SFT (degrees)		+					0
+				0	0	TRN (degrees)		+				0	0
X	X	X				BSS (Coas Star)		X	X	X			
X	X					SPA (Coas Pitch, deg)		X	X				
X	X	X				SXP (Coas X Pos, deg)		X	X	X			
	0					LAT	N61		0				
						LONG (degrees)							
+						RTGO (nmi) EMS		+					
+						VIO (ft/s)		+					
						GET 0.05 g Hr:min:s							
						SET STARS							
X	X	X				R_{Align}		X	X	X			
X	X	X				P_{Align}		X	X	X			
X	X	X				Y_{Align}		X	X	X			
						ULLAGE							

P30–EXTERNAL ΔV

TEI 73 & TEI 74 (Preliminary)

V37 Enter, 30 Enter

V06 N33 Flashing, Load Desired GETI

V06 N81 Flashing, Load Desired ΔV

						Purpose							
						P op/Guidance							
+						Weight (lb)	N47	+					
	0	0				P_{Trim}	N48		0	0			
	0	0				Y_{Trim} (degrees)			0	0			
+	0	0				Hours	N33	+	0	0			
+	0	0	0			Minutes GETI		+	0	0	0		
+	0					Seconds		+	0				
						ΔV_X	N81						
						ΔV_Y LV							
						ΔV_Z (ft/s)							
X	X	X				R		X	X	X			
X	X	X				P IMU Gimbal Angles (deg)		X	X	X			
X	X	X				Y		X	X	X			
+						H_{Apogee}	N44	+					
						$H_{Perigee}$ nmi							
+						ΔVT (ft/s)		+					
X	X	X				BT (min:s)		X	X	X			
X						ΔVC (ft/s)		X					
X	X	X	X			SXT Star		X	X	X	X		
+					0	SFT (degrees)		+					0
+				0	0	TRN (degrees)		+				0	0
X	X	X				BSS (Coas Star)		X	X	X			
X	X					SPA (Coas Pitch, deg)		X	X				
X	X	X				SXP (Coas X Pos, deg)		X	X	X			
	0					LAT (degrees)	N61		0				
						LONG							
+						RTGO (nmi) EMS		+					
+						VIO (ft/s)		+					
						GET 0.05 g Hr:min:s							
						SET STARS							
X	X	X				R_{Align}		X	X	X			
X	X	X				P_{Align}		X	X	X			
X	X	X				Y_{Align}		X	X	X			
						ULLAGE							

NOTES:

LB-136

P30 - EXTERNAL ΔV

TEI 74 (Nominal) & TEI 75

V37 Enter, 30 Enter

V06 N33 Flashing, Load Desired GETI

V06 N81 Flashing, Load Desired ΔV

						Purpose							
		X				Prop/Guidance				X			
+						Weight (lb)	N47	+					
	0	0				PTrim	N48		0	0			
	0	0				YTrim (degrees)			0	0			
+	0	0				Hours	N33	+	0	0			
+	0	0	0			Minutes GETI		+	0	0	0		
+	0					Seconds		+	0				
						ΔV_X	N81						
						ΔV_Y LV							
						ΔV_Z (ft/s)							
X	X	X				R		X	X	X			
X	X	X				P IMU Gimbal Angles (deg)		X	X	X			
X	X	X				Y		X	X	X			
+						H_{Apogee}	N44	+					
						$H_{Perigee}$ nmi							
+						ΔVT (ft/s)		+					
X	X	X				BT (min s)		X	X	X			
X						ΔVC (ft/s)		X					
X	X	X	X			SXT Star		X	X	X	X		
+					0	SFT (degrees)		+					0
+				0	0	TRN (degrees)		+				0	0
X	X	X				BSS (Coas Star)		X	X	X			
X	X					SPA (Coas Pitch, deg)		X	X				
X	X	X				SXP (Coas X Pos, deg)		X	X	X			
	0					LAT (degrees)	N61		0				
						LONG							
+						RTGO (nmi) EMS		+					
+						VIO (ft/s)		+					
						GET 0.05 g Hr min s							
						SET STARS							
X	X	X				RAlign		X	X	X			
X	X	X				PAlign		X	X	X			
X	X	X				YAlign		X	X	X			
						ULLAGE							

NOTES

TRANSEARTH INJECTION

EVENT	BT/ΔV	G.E.T.	PROPULSION/ GUIDANCE	PRETHRUST TARGETING
TEI (POSIGRADE)	139.0/ 3,046.7	223:43:47.6	SPS/G&N EXT ΔV (P-40)	P-30

	ΔV_x	N85	+ x x	h
	ΔV_y	RESIDUALS (ft/s)	+ x x x	min GET
	ΔV_z	(BODY AXI)	+ x	s

— — — • — $V_{x_{TRIM}}$ — — — •— $V_{y_{TRIM}}$ — — —•— $V_{z_{TRIM}}$ (ft/s)

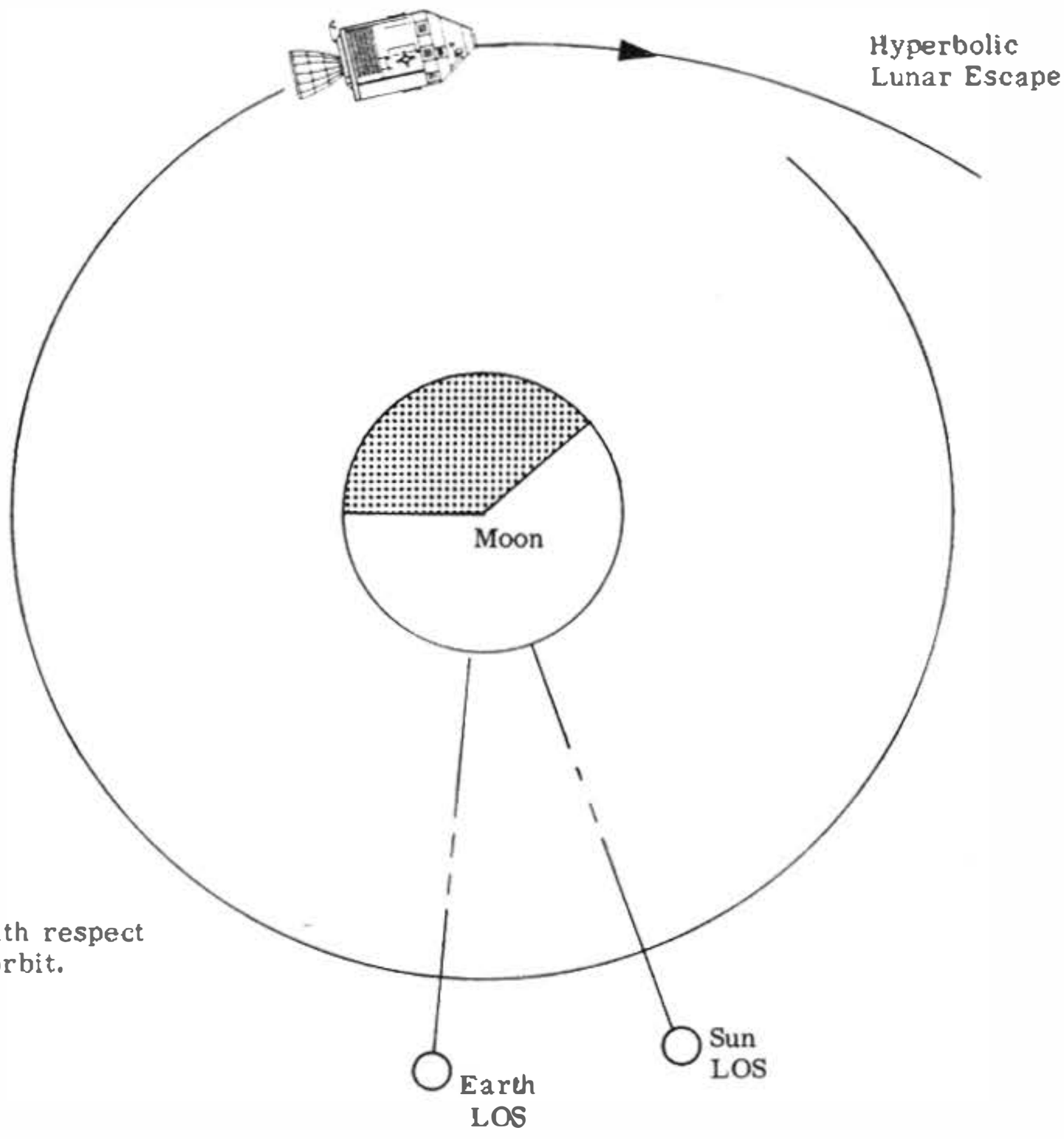

Note: Shadow is with respect to the CSM orbit.

P30 EXTERNAL ΔV
MCC 5

V37 Enter, 30 Enter

V06 N33 Flashing, Load Desired GETI

V06 N81 Flashing, Load Desired ΔV

						Purpose							
			/			Prop/Guidance				/			
+						Weight (lb)	N47	+					
	0	0				P_{Trim}	N 8		0	0			
	0	0				Y_{Trim} (degrees)			0	0			
+	0	0				Hours	N33	+	0	0			
+	0	0	0			Minutes GETI		+	0	0	0		
+	0					Seconds		+	0				
						ΔV_X	N81						
						ΔV_Y LV							
						ΔV_Z (ft/s)							
X	X	X				R		X	X	X			
X	X	X				P IMU Gimbal Angles (deg)		X	X	X			
X	X	X				Y		X	X	X			
+						H_{Apogee}	N44	+					
						$H_{Perigee}$ nmi							
+						ΔVT (ft/s)		+					
X	X	X				ST (mins)		X	X	X			
X						ΔVC (ft/s)		X					
X	X	X	X			SXT Star		X	X	X	X		
+					0	SFT (degrees)		+					0
+				0	0	TRN (degrees)		+				0	0
X	X	X				BSS (Coas Star)		X	X	X			
X	X					SPA (Coas Pitch, deg)		X	X				
X	X	X				SXP (Coas X Pos, deg)		X	X	X			
	0					LAT (degrees)	N61		0				
						LONG							
+						RTGO (nmi) EMS		+					
+						VIO (ft/s)		+					
						GET05g Hr:min:s							
						SET STARS							
X	X	X				R_{Align}		X	X	X			
X	X	X				P_{Align}		X	X	X			
X	X	X				Y_{Align}		X	X	X			
						ULLAGE							

NOTES:

P23–CISLUNAR MIDCOURSE NAVIGATION

V37 Enter, 23 Enter

V05 N70 Flashing

R1: 0 0 0 X X Celestial Body Code

R2: 0 0 X 0 0 0 – Horizon 1 – Earth Landmark 2 – Moon Landmark

R3: 0 0 C D 0 C = 0, D = 0 Landmark C-1 Earth Horizon C-2 Moon Horizon D-1 Near Horizon D-2 Far Horizon

V59 Flashing, Perform Optics Calibration

V51 Flashing - Please Mark

OPTICS CALIBRATION

+	0	0				Hours			+	0	0			
+	0	0	0			Minutes	GET		+	0	0	0		
+	0					Seconds			+	0				
X	0	0	0			Star ID	N70		X	0	0	0		
+						Trun Angle Bias	N87 R2		+					
+						Trun Angle Bias	N87 R2		+					
+						Trun Angle Bias	N87 R2		+					

MIDCOURSE NAVIGATION

+	0	0				Hours	GET		+	0	0			
+	0	0	0			Minutes			+	0	0	0		
+	0					Seconds			+	0				
X	0	0	0			Star ID	N70		X	0	0	0		
X	0	0		0	0	LMK ID			X	0	0		0	0
X	0	0			0	Hor ID			X	0	0			0
						ΔR nmi	N49							
						ΔV ft/s								
						ΔR nmi	N49							
						ΔV ft/s								
						ΔR nmi	N49							
						ΔV ft/s								
						ΔR nmi	N49							
						ΔV ft/s								
						ΔR nmi	N49							
						ΔV ft/s								
						ΔR nmi	N49							
						ΔV ft/s								

NOTES:

P23–CISLUNAR MIDCOURSE NAVIGATION

V37 Enter, 23 Enter

V05 N70 Flashing

R1:	0 0 0 X X	Celestial Body Code
R2:	0 0 X 0 0	0 – Horizon 1 – Earth Landmark 2 – Moon Landmark
R3:	0 0 C D 0	C = 0, D = 0 Landmark C-1 Earth Horizon C-2 Moon Horizon D-1 Near Horizon D-2 Far Horizon

V59 Flashing, Perform Optics Calibration

V51 Flashing - Please Mark

OPTICS CALIBRATION

+	0	0				Hours			+	0	0			
+	0	0	0			Minutes	GET		+	0	0	0		
+	0					Seconds			+	0				
X	0	0	0			Star ID	N70		X	0	0	0		
+						Trun Angle Bias	N87 R2		+					
+						Trun Angle Bias	N87 R2		+					
+						Trun Angle Bias	N87 R2		+					

MIDCOURSE NAVIGATION

+	0	0				Hours			+	0	0			
+	0	0	0			Minutes	GET		+	0	0	0		
+	0					Seconds			+	0				
X	0	0	0			Star ID	N70		X	0	0	0		
X	0	0		0	0	LMK ID			X	0	0		0	0
X	0	0			0	Hor ID			X	0	0			0
						ΔR nmi	N49							
						ΔV ft/s								
						ΔR nmi	N49							
						ΔV ft/s								
						ΔR nmi	N49							
						ΔV ft/s								
						ΔR nmi	N49							
						ΔV ft/s								
						ΔR nmi	N49							
						ΔV ft/s								
						ΔR nmi	N49							
						ΔV ft/s								
						ΔR nmi	N49							
						ΔV ft/s								

NOTES:

P40 SPS THRUSTING CSM

V37 Enter, 40 Enter
V50 N18 Flashing, Request Maneuver to FDAI R, P, Y Angles
V06 N18, FDAI R, P, Y Angles After Maneuver to Burn Attitude
V50 N25 Flashing, RI = 00204, Gimbal Actuator Test Option
V06 N40, Time from Ignition, Velocity to be Gained, Measured Change in Velocity
V99 N40 Flashing, Engine On Enable Request
V06 N40, Time from Cutoff, Velocity to be Gained, Measured Change in Velocity
V16 N40 Flashing, Final Values at Engine Cutoff
V16 N85 Flashing, Body Axes Residuals (to be Nulled)
V37 Flashing, V82 Enter
V16 N44 Flashing, Apogee Altitude, Perigee Altitude, Time to Freefall to 35 K ft Moon Orbit, 300 K ft Earth Orbit

P41 – RCS THRUSTING

V37 Enter, 41 Enter
V50 N18 Flashing, Request Maneuver to FDAI R, P, Y, Angles
V06 N18, FDAI R, P, Y Angles After Maneuver to Burn Attitude
V06 N85, X, Y, Z Body Axes Velocity to be Gained
V16 N85 (Average G on at TIG -30) Velocity to be Gained
V16 N85 Flashing, Body Axes Residuals (to be Nulled)

						50 18	Roll
							Pitch (deg)
							Yaw
						06 18	Roll
							Pitch (deg)
							Yaw
		X				06 40	TFI (min s)
							VG (ft/s)
							ΔVM (ft/s)
		X				06 40	TFC (min s)
							VG (ft/s)
							ΔVM (ft/s)
		X				16 40	TFC (min s)
							VG (ft/s)
							ΔVM (ft/s)
						85	X
							Y Residuals (ft/s)
							Z
						85	X
							Y TRIM (ft/s)
							Z
						44	HA (nmi)
							HP (nmi)
		X					TFF (min s)

						50 18	Roll
							Pitch (deg)
							Yaw
						06 18	Roll
							Pitch (deg)
							Yaw
						06 85	X
							Y VG (ft/s)
							Z
						16 85	X
							Y VG (ft/s)
							Z
						16 85	X
							Y Residuals (ft/s)
							Z
							X
							Y Trim (ft/s)
							Z

P23—CISLUNAR MIDCOURSE NAVIGATION

V37 Enter, 23 Enter

V05 N70 Flashing

R1:	0 0 0 X X	Celestial Body Code
R2:	0 0 X 0 0	0 – Horizon 1 – Earth Landmark 2 – Moon Landmark
R3:	0 0 C D 0	C = 0, D = 0 Landmark C-1 Earth Horizon C-2 Moon Horizon D-1 Near Horizon D-2 Far Horizon

V59 Flashing, Perform Optics Calibration

V51 Flashing - Please Mark

OPTICS CALIBRATION

+	0	0				Hours			+	0	0			
+	0	0	0			Minutes	GET		+	0	0	0		
+	0					Seconds			+	0				
X	0	0	0			Star ID	N70		X	0	0	0		
+						Trun Angle Bias	N87 R2		+					
+						Trun Angle Bias	N87 R2		+					
+						Trun Angle Bias	N87 R2		+					

MIDCOURSE NAVIGATION

+	0	0				Hours			+	0	0			
+	0	0	0			Minutes	GET		+	0	0	0		
+	0					Seconds			+	0				
X	0	0	0			Star ID	N70		X	0	0	0		
X	0	0		0	0	LMK ID			X	0	0		0	0
X	0	0			0	Hor ID			X	0	0			0
						ΔR nmi	N49							
						ΔV ft/s								
						ΔR nmi	N49							
						ΔV ft/s								
						ΔR nmi	N49							
						ΔV ft/s								
						ΔR nmi	N49							
						ΔV ft/s								
						ΔR nmi	N49							
						ΔV ft/s								
						ΔR nmi	N49							
						ΔV ft/s								

P23–CISLUNAR MIDCOURSE NAVIGATION

V37 Enter, 23 Enter

V05 N70 Flashing

R1: 0 0 0 X X Celestial Body Code

R2: 0 0 X 0 0 0 – Horizon 1 – Earth Landmark 2 – Moon Landmark

R3: 0 0 C D 0 C = 0, D = 0 Landmark C-1 Earth Horizon C-2 Moon Horizon D-1 Near Horizon D-2 Far Horizon

V59 Flashing, Perform Optics Calibration

V51 Flashing - Please Mark

OPTICS CALIBRATION

+	0	0				Hours		+	0	0			
+	0	0	0			Minutes GET		+	0	0	0		
+	0					Seconds		+	0				
X	0	0	0			Star ID	N70	X	0	0	0		
+						Trun Angle Bias	N87 R2	+					
+						Trun Angle Bias	N87 R2	+					
+						Trun Angle Bias	N87 R2	+					

MIDCOURSE NAVIGATION

+	0	0				Hours		+	0	0			
+	0	0	0			Minutes GET		+	0	0	0		
+	0					Seconds		+	0				
X	0	0	0			Star ID	N70	X	0	0	0		
X	0	0		0	0	LMK ID		X	0	0		0	0
X	0	0			0	Hor ID		X	0	0			0
						ΔR nmi	N49						
						ΔV ft/s							
						ΔR nmi	N49						
						ΔV ft/s							
						ΔR nmi	N49						
						ΔV ft/s							
						ΔR nmi	N49						
						ΔV ft/s							
						ΔR nmi	N49						
						ΔV ft/s							
						ΔR nmi	N49						
						ΔV ft/s							

P23—CISLUNAR MIDCOURSE NAVIGATION

V37 Enter, 23 Enter

V05 N70 Flashing

R1:	0 0 0 X X	Celestial Body Code
R2:	0 0 X 0 0	0 – Horizon 1 – Earth Landmark 2 – Moon Landmark
R3:	0 0 C D 0	C = 0, D = 0 Landmark C-1 Earth Horizon C-2 Moon Horizon D-1 Near Horizon D-2 Far Horizon

V59 Flashing, Perform Optics Calibration

V51 Flashing - Please Mark

OPTICS CALIBRATION

+	0	0				Hours			+	0	0			
+	0	0	0			Minutes GET			+	0	0	0		
+	0					Seconds			+	0				
X	0	0	0			Ster ID	N70		X	0	0	0		
+						Trun Angle Bias	N87 R2		+					
+						Trun Angle Bias	N87 R2		-					
+						Trun Angle Bias	N87 R2		+					

MIDCOURSE NAVIGATION

+	0	0				Hours			+	0	0			
+	0	0	0			Minutes GET			+	0	0	0		
+	0					Seconds			+	0				
X	0	0	0			Star ID	N70		X	0	0	0		
X	0	0		0	0	LMK ID			X	0	0		0	0
X	0	0			0	Hor ID			X	0	0			0
						ΔR nmi	N49							
						ΔV ft/s								
						ΔR nmi	N49							
						ΔV ft/s								
						ΔR nmi	N49							
						ΔV ft/s								
						ΔR nmi	N49							
						ΔV ft/s								
						ΔR nmi	N49							
						ΔV ft/s								
						ΔR nmi	N49							
						ΔV ft/s								
						ΔR nmi	N49							
						ΔV ft/s								

NOTES

P23–CISLUNAR MIDCOURSE NAVIGATION

V37 Enter, 23 Enter

V05 N70 Flashing

R1: 0 0 0 X X Celestial Body Code

R2: 0 0 X 0 0 0 – Horizon 1 – Earth Landmark 2 – Moon Landmark

R3: 0 0 C D 0 C = 0, D = 0 Landmark C-1 Earth Horizon C-2 Moon Horizon D-1 Near Horizon D-2 Far Horizon

V59 Flashing, Perform Optics Calibration

V51 Flashing - Please Mark

OPTICS CALIBRATION

+	0	0				Hours			+	0	0			
+	0	0	0			Minutes	GET		+	0	0	0		
+	0					Seconds			+	0				
X	0	0	0			Star ID	N70		X	0	0	0		
+						Trun Angle Bias	N87 R2		+					
+						Trun Angle Bias	N87 R2		+					
+						Trun Angle Bias	N87 R2		+					

MIDCOURSE NAVIGATION

+	0	0				Hours			+	0	0			
+	0	0	0			Minutes	GET		+	0	0	0		
+	0					Seconds			+	0				
X	0	0	0			Star ID	N70		X	0	0	0		
X	0	0		0	0	LMK ID			X	0	0		0	0
X	0	0			0	Hor ID			X	0	0			0
						ΔR nmi	N49							
						ΔV ft/s								
						ΔR nmi	N49							
						ΔV ft/s								
						ΔR nmi	N49							
						ΔV ft/s								
						ΔR nmi	N49							
						ΔV ft/s								
						ΔR nmi	N49							
						ΔV ft/s								
						ΔR nmi	N49							
						ΔV ft/s								

NOTES:

P23–CISLUNAR MIDCOURSE NAVIGATION

V37 Enter. 23 Enter

V05 N70 Flashing

R1:	0 0 0 X X	Celestial Body Code
R2:	0 0 X 0 0	0 – Horizon 1 – Earth Landmark 2 – Moon Landmark
R3:	0 0 C D 0	C = 0, D = 0 Landmark C-1 Earth Horizon C-2 Moon Horizon D-1 Near Horizon D-2 Far Horizon

V59 Flashing, Perform Optics Calibration

V51 Flashing - Please Mark

OPTICS CALIBRATION

+	0	0				Hours			+	0	0			
+	0	0	0			Minutes GET			+	0	0	0		
+	0					Seconds			+	0				
X	0	0	0			Star ID	N70		X	0	0	0		
+						Trun Angle Bias	N87 R2		+					
+						Trun Angle Bias	N87 R2		+					
+						Trun Angle Bias	N87 R2		+					

MIDCOURSE NAVIGATION

+	0	0				Hours			+	0	0			
+	0	0	0			Minutes	GET		+	0	0	0		
+	0					Seconds			+	0				
X	0	0	0			Star ID		N70	X	0	0	0		
X	0	0		0	0	LMK ID			X	0	0		0	0
X	0	0			0	Hor ID			X	0	0			0
						ΔR nmi		N49						
						ΔV ft/s								
						ΔR nmi		N49						
						ΔV ft/s								
						ΔR nmi		N49						
						ΔV ft/s								
						ΔR nmi		N49						
						ΔV ft/s								
						ΔR nmi		N49						
						ΔV ft/s								
						ΔR nmi		N49						
						ΔV ft/s								

P30–EXTERNAL ΔV
MCC 6

V37 Enter, 30 Enter

V06 N33 Flashing, Load Desired GETI

V06 N81 Flashing, Load Desired ΔV

						Purpose							
		/				Prop/Guidance			/				
+						Weight (lb)	N47	+					
	0	0				PTrim	N48		0	0			
	0	0				Y_{Trim} (degrees)			0	0			
+	0	0				Hours	N33	+	0	0			
+	0	0	0			Minutes GETI		+	0	0	0		
+	0					Seconds		+	0				
						ΔV_X	N81						
						ΔV_Y LV							
						ΔV_Z (ft/s)							
X	X	X				R		X	X	X			
X	X	X				P IMU Gimbal Angles (deg)		X	X	X			
X	X	X				Y		X	X	X			
+						H_{Apogee}	N44	+					
						$H_{Perigee}$ nmi							
+						ΔVT (ft/s)		+					
X	X	X				BT (min:s)		X	X	X			
X						ΔVC (ft/s)		X					
X	X	X	X			SXT Star		X	X	X	X		
+					0	SFT (degrees)		+					0
+				0	0	TRN (degrees)		+				0	0
X	X	X				BSS (Coas Star)		X	X	X			
X	X					SPA (Coas Pitch, deg)		X	X				
X	X	X				SXP (Coas X Pos, deg)		X	X	X			
	0					LAT (degrees)	N61		0				
						LONG							
+						RTGO (nmi) EMS		+					
+						VIO (ft/s)		+					
						GET 0.05 g Hr:min:s							
						SET STARS							
X	X	X				R_{Align}		X	X	X			
X	X	X				P_{Align}		X	X	X			
X	X	X				Y_{Align}		X	X	X			
						ULLAGE							

NOTES

ENTRY

P61

V37 Enter, 61 Enter

V06 N61 Flashing

V06 N60 Flashing, Record

V06 N63 Flashing, Used for EMS if no Communication

P62

V50 N25 Flashing, Request CM/SM Separation

V06 N61 Flashing

V06 N22, Monitor

P63

V06 N64, Monitor

							Area									
	X	X	X				R 0.05 g		X	X	X					
	X	X	X				P 0.05 g		X	X	X					
	X	X	X				Y 0.05 g		X	X	X					
							GET Hor Ck									
	X	X	X				P EI-17		X	X	X					
		0					Lat	N61		0						
							Long									
	X	X	X				Max g		X	X	X					
	+						V_{400K}	N60	+							
	-	0	0				γ_{400K}		-	0	0					
	+						RTGO EMS		+							
	+						V I O		+							
							RTT									
	X	X					RET 0.05 g		X	X						
	+	0	0				D_L Max	N69	+	0	0					
	+	0	0				D_L Min		+	0	0					
	+						V_L Max		+							
	+						V_L Min		+							
	X	X	X				D_O		X	X	X					
	X	X					RET V_{Circ}		X	X						
	X	X					RETBBO		X	X						
	X	X					RETEBO		X	X						
	X	X					RETDRO		X	X						
	X	X	X	X			SXTS		X	X	X	X				
	+					0	SFT EI-2		+					0		
	+				0	0	TRN		+				0	0		
	X	X	X				BSS		X	X	X					
	X	X					SPA EI-2		X	X						
	X	X	X				SXP		X	X	X					
	X	X	X	X			Lift Vector		X	X	X	X				

P40 – SPS THRUSTING CSM

MCC 6

V37 Enter, 40 Enter

V50 N18 Flashing, Request Maneuver to FDAI R, P, Y Angles

V06 N18, FDAI R, P, Y Angles After Maneuver to Burn Attitude

V50 N25 Flashing, R1 = 0 0 2 0 4, Gimbal Actuator Test Option

V06 N40, Time from Ignition, Velocity to be Gained, Measured Change in Velocity

V99 N40 Flashing, Engine On Enable Request

V06 N40, Time from Cutoff, Velocity to be Gained, Measured Change in Velocity

V16 N40 Flashing, Final Values at Engine Cutoff

V16 N85 Flashing, Body Axes Residuals (to be Nulled)

V37 Flashing, V82 Enter

V16 N44 Flashing, Apogee Altitude, Perigee Altitude, Time to Freefall to 35 K ft Moon Orbit, 300 K ft Earth Orbit

P41 – RCS THRUSTING

V37 Enter, 41 Enter

V50 N18 Flashing, Request Maneuver to FDAI R, P, Y, Angles

V06 N18, FDAI R, P, Y Angles After Maneuver to Burn Attitude

V06 N85, X, Y, Z Body Axes Velocity to be Gained

V16 N85 (Average G on at TIG -30) Velocity to be Gained

V16 N85 Flashing, Body Axes Residuals (to be Nulled)

	50-18	Roll
		Pitch (deg)
		Yaw
	06-18	Roll
		Pitch (deg)
		Yaw
	06-40	TFI (min:s)
		VG (ft/s)
		ΔVM (ft/s)
	06-40	TFC (min:s)
		VG (ft/s)
		ΔVM (ft/s)
	16-40	TFC (min:s)
		VG (ft/s)
		ΔVM (ft/s)
	85	X
		Y Residuals (ft/s)
		Z
	85	X
		Y TRIM (ft/s)
		Z
	44	HA (nmi)
		HP (nmi)
		TFF (min:s)

	50-18	Roll
		Pitch (deg)
		Yaw
	06-18	Roll
		Pitch (deg)
		Yaw
	06-85	X
		Y VG (ft/s)
		Z
	16-85	X
		Y VG (ft/s)
		Z
	16-85	X
		Y Residuals (ft/s)
		Z
		X
		Y Trim (ft/s)
		Z

P23 - CISLUNAR MIDCOURSE NAVIGATION

V37 Enter, 23 Enter

V05 N70 Flashing

R1:	0 0 0 X X	Celestial Body Code
R2:	0 0 X 0 0	0 — Horizon 1 — Earth Landmark 2 — Moon Landmark
R3:	0 0 C D 0	C = 0, D = 0 Landmark C-1 Earth Horizon C-2 Moon Horizon D-1 Near Horizon D-2 Far Horizon

V59 Flashing, Perform Optics Calibration

V51 Flashing - Please Mark

OPTICS CALIBRATION

+	0	0				Hours		+	0	0			
+	0	0	0			Minutes GET		+	0	0	0		
+	0					Seconds		+	0				
X	0	0	0			Star ID	N70	X	0	0	0		
+						Trun Angle Bias	N87 R2	+					
+						Trun Angle Bias	N87 R2	+					
+						Trun Angle Bias	N87 R2	+					

MIDCOURSE NAVIGATION

+	0	0				Hours		+	0	0			
+	0	0	0			Minutes GET		+	0	0	0		
+	0					Seconds		+	0				
X	0	0	0			Star ID	N70	X	0	0	0		
X	0	0		0	0	LMK ID		X	0	0		0	0
X	0	0			0	Hor ID		X	0	0			0
						ΔR nmi	N49						
						ΔV ft/s							
						ΔR nmi	N49						
						ΔV ft/s							
						ΔR nmi	N49						
						ΔV ft/s							
						ΔR nmi	N49						
						ΔV ft/s							
						ΔR nmi	N49						
						ΔV ft/s							

NOTES:

P23-CISLUNAR MIDCOURSE NAVIGATION

V37 Enter, 23 Enter

V05 N70 Flashing

R1: 0 0 0 X X Celestial Body Code

R2: 0 0 X 0 0 0 – Horizon 1 – Earth Landmark 2 – Moon Landmark

R3: 0 0 C D 0 C = 0, D = 0 Landmark C-1 Earth Horizon C-2 Moon Horizon D-1 Near Horizon D-2 Far Horizon

V59 Flashing, Perform Optics Calibration

V51 Flashing - Please Mark

OPTICS CALIBRATION

+	0	0				Hours			+	0	0			
+	0	0	0			Minutes	GET		+	0	0	0		
+	0					Seconds			+	0				
X	0	0	0			Star ID		N70	X	0	0	0		
+						Trun Angle Bias		N87 R2	+					
+						Trun Angle Bias		N87 R2	+					
+						Trun Angle Bias		N87 R2	+					

MIDCOURSE NAVIGATION

+	0	0				Hours			+	0	0			
+	0	0	0			Minutes	GET		+	0	0	0		
+	0					Seconds			+	0				
X	0	0	0			Star ID		N70	X	0	0	0		
X	0	0		0	0	LMK ID			X	0	0		0	0
X	0	0			0	Hor ID			X	0	0			0
						ΔR nmi		N49						
						ΔV ft/s								
						ΔR nmi		N49						
						ΔV ft/s								
						ΔR nmi		N49						
						ΔV ft/s								
						ΔR nmi		N49						
						ΔV ft/s								
						ΔR nmi		N49						
						ΔV ft/s								
						ΔR nmi		N49						
						ΔV ft/s								

NOTES:

P23—CISLUNAR MIDCOURSE NAVIGATION

V37 Enter, 23 Enter

V0S N70 Flashing

R1: 0 0 0 X X Celestial Body Code

R2: 0 0 X 0 0 0 — Horizon 1 — Earth Landmark 2 — Moon Landmark

R3: 0 0 C D 0 C = 0, D = 0 Landmark C-1 Earth Horizon C-2 Moon Horizon D-1 Near Horizon D-2 Far Horizon

V59 Flashing, Perform Optics Calibration

V51 Flashing · Please Mark

OPTICS CALIBRATION

+	0	0				Hours		+	0	0			
+	0	0	0			Minutes GET		+	0	0	0		
+	0					Seconds		+	0				
X	0	0	0			Star ID	N70	X	0	0	0		
+						Trun Angle Bias	N87 R2	+					
+						Trun Angle Bias	N87 R2	-					
+						Trun Angle Bias	N87 R2	+					

MIDCOURSE NAVIGATION

+	0	0				Hours		+	0	0			
+	0	0	0			Minutes GET		+	0	0	0		
+	0					Seconds		+	0				
X	0	0	0			Star ID	N70	X	0	0	0		
X	0	0		0	0	LMK ID		X	0	0		0	0
X	0	0			0	Hor ID		X	0	0			0
						ΔR nmi	N49						
						ΔV ft/s							
						ΔR nmi	N49						
						ΔV ft/s							
						ΔR nmi	N49						
						ΔV ft/s							
						ΔR nmi	N49						
						ΔV ft/s							
						ΔR nmi	N49						
						ΔV ft/s							
						ΔR nmi	N49						
						ΔV ft/s							

NOTES:

P23– CISLUNAR MIDCOURSE NAVIGATION

V37 Enter, 23 Enter

V05 N70 Flashing

R1: 0 0 0 X X Celestial Body Code

R2: 0 0 X 0 0 0 – Horizon 1 – Earth Landmark 2 – Moon Landmark

R3: 0 0 C D 0 C = 0, D = 0 Landmark C-1 Earth Horizon C-2 Moon Horizon D-1 Near Horizon D-2 Far Horizon

V59 Flashing, Perform Optics Calibration

V51 Flashing - Please Mark

OPTICS CALIBRATION

+	0	0				Hours		+	0	0			
+	0	0	0			Minutes GET		+	0	0	0		
+	0					Seconds		+	0				
X	0	0	0			Star ID	N70	X	0	0	0		
+						Trun Angle Bias	N87 R2	+					
+						Trun Angle Bias	N87 R2	+					
+						Trun Angle Bias	N87 R2	+					

MIDCOURSE NAVIGATION

+	0	0				Hours		+	0	0			
+	0	0	0			Minutes	GET	+	0	0	0		
+	0					Seconds		+	0				
X	0	0	0			Star ID	N70	X	0	0	0		
X	0	0		0	0	LMK ID		X	0	0		0	0
X	0	0			0	Hor ID		X	0	0			0
						ΔR nmi	N49						
						ΔV ft/s							
						ΔR nmi	N49						
						ΔV ft/s							
						ΔR nmi	N49						
						ΔV ft/s							
						ΔR nmi	N49						
						ΔV ft/s							
						ΔR nmi	N49						
						ΔV ft/s							
						ΔR nmi	N49						
						ΔV ft/s							

NOTES:

P23–CISLUNAR MIDCOURSE NAVIGATION

V37 Enter, 23 Enter

V05 N70 Flashing

R1:	0 0 0 X X	Celestial Body Code
R2:	0 0 X 0 0	0 – Horizon 1 – Earth Landmark 2 – Moon Landmark
R3:	0 0 C D 0	C = 0, D = 0 Landmark C-1 Earth Horizon C-2 Moon Horizon D-1 Near Horizon D-2 Far Horizon

V59 Flashing, Perform Optics Calibration

V51 Flashing - Please Mark

OPTICS CALIBRATION

+	0	0				Hours			+	0	0				
+	0	0	0			Minutes	GET		+	0	0	0			
+	0					Seconds			+	0					
X	0	0	0			Star ID	N70		X	0	0	0			
+						Trun Angle Bias	N87 R2		+						
+						Trun Angle Bias	N87 R2		+						
+						Trun Angle Bias	N87 R2		+						

MIDCOURSE NAVIGATION

+	0	0				Hours			+	0	0				
+	0	0	0			Minutes	GET		+	0	0	0			
+	0					Seconds			+	0					
X	0	0	0			Star ID	N70		X	0	0	0			
X	0	0		0	0	LMK ID			X	0	0		0	0	
X	0	0			0	Hor ID			X	0	0			0	
						ΔR nmi	N49								
						ΔV ft/s									
						ΔR nmi	N49								
						ΔV ft/s									
						ΔR nmi	N49								
						ΔV ft/s									
						ΔR nmi	N49								
						ΔV ft/s									
						ΔR nmi	N49								
						ΔV ft/s									
						ΔR nmi	N49								
						ΔV ft/s									

NOTES:

P23–CISLUNAR MIDCOURSE NAVIGATION

V37 Enter, 23 Enter

V05 N70 Flashing

R1: 0 0 0 X X Celestial Body Code

R2: 0 0 X 0 0 0 – Horizon 1 – Earth Landmark 2 – Moon Landmark

R3: 0 0 C D 0 C = 0, D = 0 Landmark C-1 Earth Horizon C-2 Moon Horizon D-1 Near Horizon D-2 Far Horizon

V59 Flashing, Perform Optics Calibration

V51 Flashing - Please Mark

OPTICS CALIBRATION

+	0	0				Hours		+	0	0			
+	0	0	0			Minutes GET		+	0	0	0		
+	0					Seconds		+	0				
X	0	0	0			Star ID	N70	X	0	0	0		
+						Trun Angle Bias	N87 R2	+					
+						Trun Angle Bias	N87 R2	+					
+						Trun Angle Bias	N87 R2	+					

MIDCOURSE NAVIGATION

+	0	0				Hours		+	0	0			
+	0	0	0			Minutes GET		+	0	0	0		
+	0					Seconds		+	0				
X	0	0	0			Star ID	N70	X	0	0	0		
X	0	0		0	0	LM/K ID		X	0	0		0	0
X	0	0			0	Hor ID		X	0	0			0
						ΔR nmi	N49						
						ΔV ft/s							
						ΔR nmi	N49						
						ΔV ft/s							
						ΔR nmi	N49						
						ΔV ft/s							
						ΔR nmi	N49						
						ΔV ft/s							
						ΔR nmi	N49						
						ΔV ft/s							
						ΔR nmi	N49						
						ΔV ft/s							

NOTES:

P30-EXTERNAL ΔV
MCC 7

V37 Enter, 30 Enter

V06 N33 Flashing, Load Desired GETI

V06 N81 Flashing, Load Desired ΔV

						Purpose							
		/				Prop/Guidance				/			
+						Weight (lb)	N47	+					
	0	0				P_{Trim}	N48		0	0			
	0	0				Y_{Trim} (degrees)			0	0			
+	0	0				Hours	N33	+	0	0			
+	0	0	0			Minutes GETI		+	0	0	0		
+	0					Seconds		+	0				
						ΔV_X	N81						
						ΔV_Y LV							
						ΔV_Z (ft/s)							
X	X	X				R		X	X	X			
X	X	X				P IMU Gimbal Angles (deg)		X	X	X			
X	X	X				Y		X	X	X			
+						H_{Apogee}	N44	+					
						$H_{Perigee}$ nmi							
+						ΔVT (ft/s)		+					
X	X	X				BT (min:s)		X	X	X			
X						ΔVC (ft/s)		X					
X	X	X	X			SXT Star		X	X	X	X		
+					0	SFT (degrees)		+					0
+				0	0	TRN (degrees)		+				0	0
X	X	X				BSS (Coas Star)		X	X	X			
X	X					SPA (Coas Pitch, deg)		X	X				
X	X	X				SXP (Coas X Pos, deg)		X	X	X			
	0					LAT	N61		0				
	/					LONG (degrees)							
+						RTGO (nmi) EMS		+					
+						VIO (ft/s)		+					
						GET 0.05 g Hr:min:s							
						SET STARS							
X	X	X				R_{Align}		X	X	X			
X	X	X				P_{Align}		X	X	X			
X	X	X				Y_{Align}		X	X	X			
						ULLAGE							

NOTES:

ENTRY

P61

V37 Enter, 61 Enter

V06 N61 Flashing

V06 N60 Flashing, Record

V06 N63 Flashing, Used for EMS if no Communication

P62

V50 N25 Flashing, Request CM/SM Separation

V06 N61 Flashing

V06 N22, Monitor

P63

V06 N64, Monitor

							Area									
	X	X	X				R 0.05 g		X	X	X			
	X	X	X				P 0.05 g		X	X	X			
	X	X	X				Y 0.05 g		X	X	X			
							GET Hor Ck							
	X	X	X				P EI-17		X	X	X			
		0					Lat	N61		0				
							Long							
	X	X	X				Max g		X	X	X			
	+						V_{400K}	N60	+					
	-	0	0				γ_{400K}		-	0	0			
	+						RTGO EMS		+					
	+						VIO		+					
							RTT							
	X	X					RET 0.05 g		X	X				
	+	0	0				D_L Max	N69	+	0	0			
	+	0	0				D_L Min		+	0	0			
	+						V_L Max		+					
	+						V_L Min		+					
	X	X	X				D_O		X	X	X			
	X	X					RET V_{Circ}		X	X				
	X	X					RETBBO		X	X				
	X	X					RETEBO		X	X				
	X	X					RETDRO		X	X				
	X	X	X	X			SXTS		X	X	X	X		
	+					0	SFT EI-2		+					0
	+				0	0	TRN		+				0	0
	X	X	X				BSS		X	X	X			
	X	X					SPA EI-2		X	X				
	X	X	X				SXP		X	X	X			
	X	X	X	X			Lift Vector		X	X	X	X		

P40 SPS THRUSTING CSM

MCC 7

V37 Enter, 40 Enter

V50 N18 Flashing, Request Maneuver to FDAI R, P, Y Angles

V06 N18, FDAI R, P, Y Angles After Maneuver to Burn Attitude

V50 N25 Flashing, 21 - 00204, Gimbal Actuator Test Option

V06 N40, Time from Ignition, Velocity to be Gained, Measured Change in Velocity

V99 N40 Flashing, Engine On Enable Request

V06 N40, Time from Cutoff, Velocity to be Gained, Measured Change in Velocity

V16 N40 Flashing, Final Values at Engine Cutoff

V16 N85 Flashing, Body Axes Residuals (to be Nulled)

V37 Flashing, V82 Enter

V16 N44 Flashing, Apogee Altitude, Perigee Altitude, Time to Freefall to 35 K ft Moon Orbit, 300 K ft Earth Orbit

	50,18	Roll
		Pitch (deg)
		Yaw
	06,18	Roll
		Pitch (deg)
		Yaw
X	06,40	TFI (min s)
		VG (ft/s)
		ΔVM (ft/s)
X	06,40	TFC (min s)
		VG (ft/s)
		ΔVM (ft/s)
X	16,40	TFC (min s)
		VG (ft/s)
		ΔVM (ft/s)
	85	X
		Y Residuals (ft/s)
		Z
	85	X
		Y TRIM (ft/s)
		Z
	44	HA (nmi)
		HP (nmi)
X		TFF (min s)

P41 RCS THRUSTING

V37 Enter, 41 Enter

V50 N18 Flashing, Request Maneuver to FDAI R, P, Y, Angles

V06 N18, FDAI R, P, Y Angles After Maneuver to Burn Altitude

V06 N85, X, Y, Z Body Axes Velocity to be Gained

V16 N85 (Average G on at TIG -30) Velocity to be Gained

V16 N85 Flashing, Body Axes Residuals (to be Nulled)

	50,18	Roll
		Pitch (deg)
		Yaw
	06,18	Roll
		Pitch (deg)
		Yaw
	06,85	X
		Y VG (ft/s)
		Z
	16,85	X
		Y VG (ft/s)
		Z
	16,85	X
		Y Residuals (ft/s)
		Z
		X
		Y Trim (ft/s)
		Z

P23—CISLUNAR MIDCOURSE NAVIGATION

V37 Enter, 23 Enter

V05 N70 Flashing

R1:	0 0 0 X X	Celestial Body Code
R2:	0 0 X 0 0	0 – Horizon 1 – Earth Landmark 2 – Moon Landmark
R3:	0 0 C D 0	C = 0, D = 0 Landmark C-1 Earth Horizon C-2 Moon Horizon D-1 Near Horizon D-2 Far Horizon

V59 Flashing, Perform Optics Calibration

V51 Flashing - Please Mark

OPTICS CALIBRATION

+	0	0				Hours			+	0	0			
+	0	0	0			Minutes GET			+	0	0	0		
+	0					Seconds			+	0				
X	0	0	0			Star ID	N70		X	0	0	0		
+						Trun Angle Bies	N87 R2		+					
+						Trun Angle Bias	N87 R2		+					
+						Trun Angle Bies	N87 R2		+					

MIDCOURSE NAVIGATION

+	0	0				Hours			+	0	0			
+	0	0	0			Minutes GET			+	0	0	0		
+	0					Seconds			+	0				
X	0	0	0			Star ID	N70		X	0	0	0		
X	0	0		0	0	LMK ID			X	0	0		0	0
X	0	0			0	Hor ID			X	0	0			0
						ΔR nmi	N49							
						ΔV ft/s								
						ΔR nmi	N49							
						ΔV ft/s								
						ΔR nmi	N49							
						ΔV ft/s								
						ΔR nmi	N49							
						ΔV ft/s								
						ΔR nmi	N49							
						ΔV ft/s								
						ΔR nmi	N49							
						ΔV ft/s								

NOTES:

P23-CISLUNAR MIDCOURSE NAVIGATION

V37 Enter, 23 Enter

V05 N70 Flashing

R1:	0 0 0 X X	Celestial Body Code
R2:	0 0 X 0 0	0 – Horizon 1 – Earth Landmark 2 – Moon Landmark
R3:	0 0 C D 0	C = 0, D = 0 Landmark C-1 Earth Horizon C-2 Moon Horizon D-1 Near Horizon D-2 Far Horizon

V59 Flashing, Perform Optics Calibration

V51 Flashing - Please Mark

OPTICS CALIBRATION

+	0	0				Hours			+	0	0			
+	0	0	0			Minutes	GET		+	0	0	0		
+	0					Seconds			+	0				
X	0	0	0			Star ID		N70	X	0	0	0		
+						Trun Angle Bias		N87 R2	+					
+						Trun Angle Bias		N87 R2	+					
+						Trun Angle Bias		N87 R2	+					

MIDCOURSE NAVIGATION

+	0	0				Hours			+	0	0			
+	0	0	0			Minutes	GET		+	0	0	0		
+	0					Seconds			+	0				
X	0	0	0			Star ID		N70	X	0	0	0		
X	0	0		0	0	LMK ID			X	0	0		0	0
X	0	0			0	Hor ID			X	0	0			0
						ΔR nmi		N49						
						ΔV ft/s								
						ΔR nmi		N49						
						ΔV ft/s								
						ΔR nmi		N49						
						ΔV ft/s								
						ΔR nmi		N49						
						ΔV ft/s								
						ΔR nmi		N49						
						ΔV ft/s								
						ΔR nmi		N49						
						ΔV ft/s								

NOTES:

P23—CISLUNAR MIDCOURSE NAVIGATION

V37 Enter, 23 Enter

V05 N70 Flashing

R1:	0 0 0 X X	Celestial Body Code
R2:	0 0 X 0 0	0 – Horizon 1 – Earth Landmark 2 – Moon Landmark
R3:	0 0 C D 0	C = 0, D = 0 Landmark C-1 Earth Horizon C-2 Moon Horizon D-1 Near Horizon D-2 Far Horizon

V59 Flashing, Perform Optics Calibration

V51 Flashing - Please Mark

OPTICS CALIBRATION

+	0	0				Hours		+	0	0			
+	0	0	0			Minutes GET		+	0	0	0		
+	0			•		Seconds		+	0			•	
X	0	0	0			Star ID	N70	X	0	0	0		
+			•			Trun Angle Bias	N87 R2	+			•		
+			•			Trun Angle Bias	N87 R2	+			•		
+			•			Trun Angle Bias	N87 R2	+			•		

MIDCOURSE NAVIGATION

+	0	0				Hours		+	0	0			
+	0	0	0			Minutes GET		+	0	0	0		
+	0					Seconds		+	0				
X	0	0	0			Star ID	N70	X	0	0	0		
X	0	0		0	0	LMK ID		X	0	0		0	0
X	0	0			0	Hor ID		X	0	0			0
				•		ΔR nmi	N49					•	
				•		ΔV ft/s						•	
				•		ΔR nmi	N49					•	
				•		ΔV ft/s						•	
				•		ΔR nmi	N49					•	
				•		ΔV ft/s						•	
				•		ΔR nmi	N49					•	
				•		ΔV ft/s						•	
				•		ΔR nmi	N49					•	
				•		ΔV ft/s						•	
				•		ΔR nmi	N49					•	
				•		ΔV ft/s						•	

NOTES:

APOLLO EARTH ENTRY

Aerodynamic Forces

The earth entry trajectory is shaped by the forces of gravity and atmospheric flow over the spacecraft surface. The latter force has two components, lift and drag.

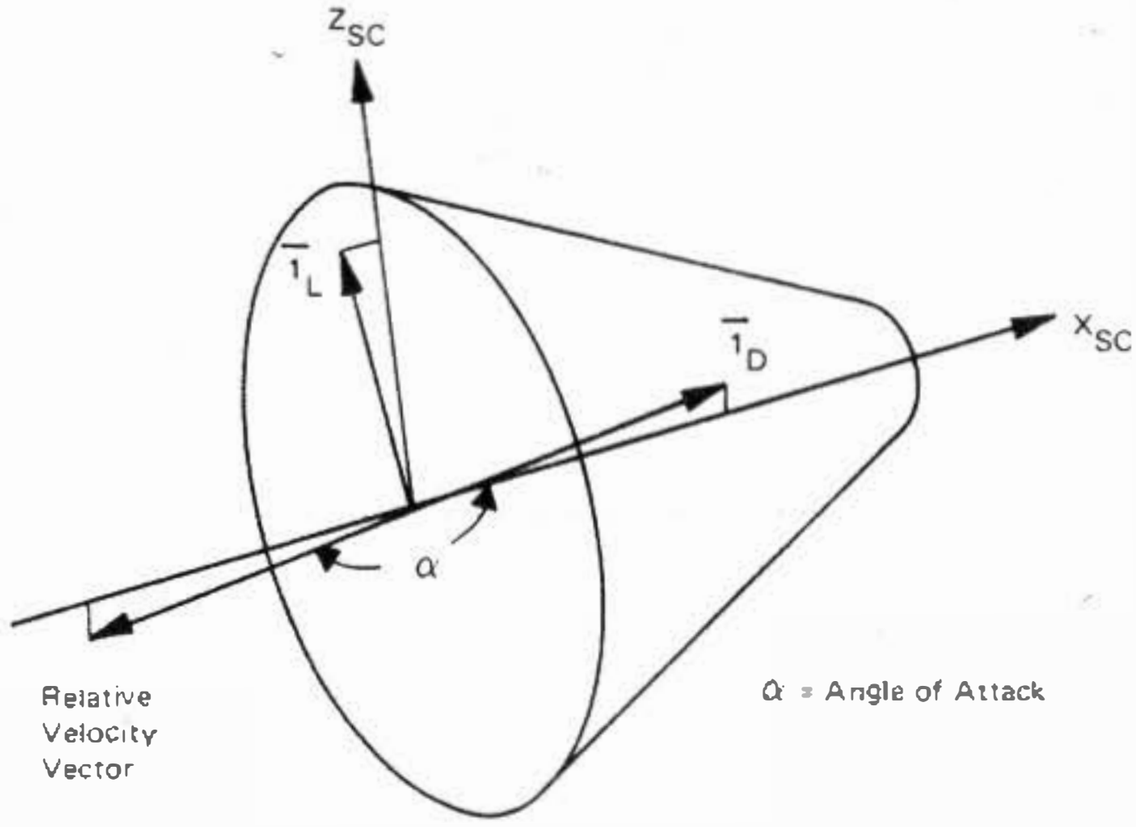

Drag is a force directed opposite to the relative velocity vector and equal to:

$$\overline{D} = \tfrac{1}{2} \frac{SC_D}{M} \rho v^2 \overline{1}_D (ft/s^2)$$

Lift is a force perpendicular to the relative velocity vector and equal to:

$$\overline{L} = \tfrac{1}{2} \frac{SC_L}{M} \rho v^2 \overline{1}_L (ft/s^2)$$

where,

ρ = Atmospheric density (slugs/ft^3)(1)
v = Relative velocity magnitude (ft/s)
C_D = Coefficient of drag (unitless)
C_L = Coefficient of lift (unitless)
M = Mass of spacecraft (slugs)
S = Surface area presented to atmospheric flow (ft^2)

Aerodynamic lift (or C_L) is a consequence of the vehicle center-of-mass (CM)(2) being offset from its axis of symmetry. With the relative velocity vector along the axis of symmetry, the resulting symmetrical pressure distribution produces a resultant force ($\overline{F}$) through the center-of-pressure (CP)(3). The component of this force ($\overline{f}_1$) perpendicular to the line joining the CP and CM causes a torque about the CM. The spacecraft will rotate about the CM until a stable attitude is reached where the force $\overline{F}$ is fully along the line joining the CM and CP.

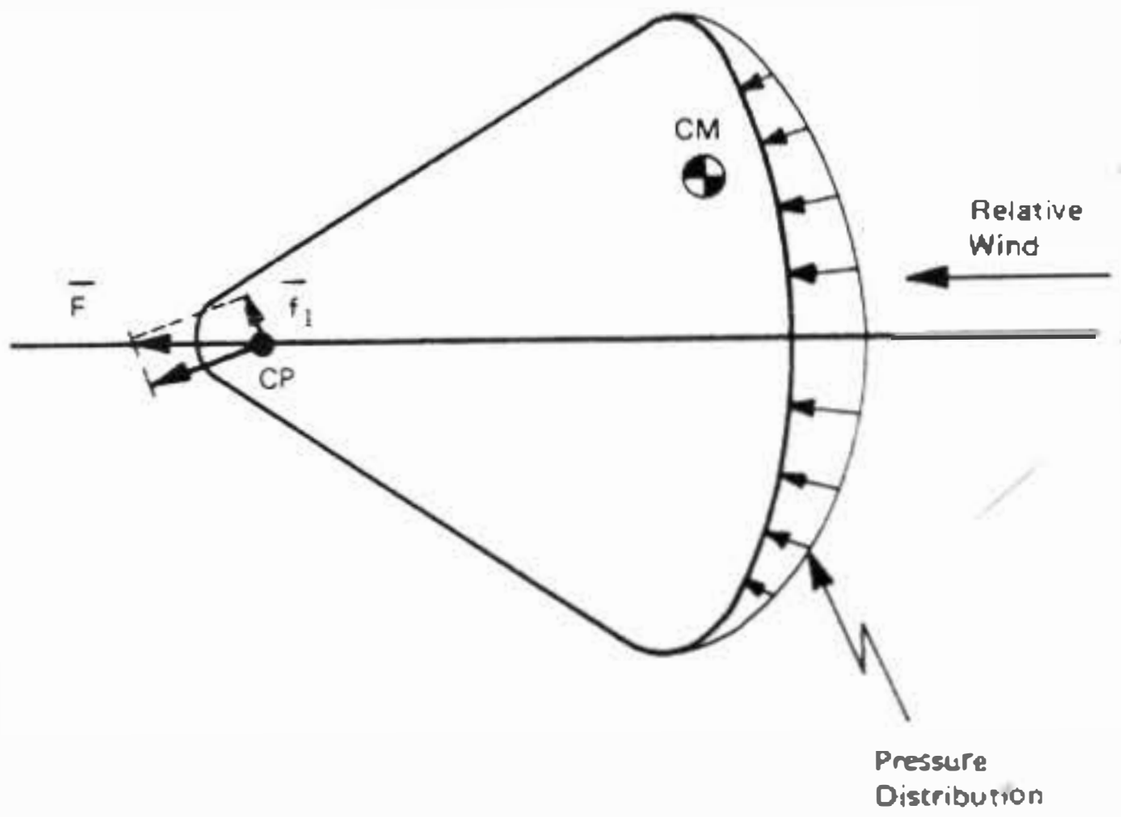

Notes:

1. A slug is a constant, relating units in the equation
   F(pound-force) = M(slugs) x a(ft/s^2)
2. Center-of-mass: The point where the mass of a body may be regarded as being concentrated, insofar as motion of translation is concerned.
3. Center-of-pressure: The point where the resultant of all aerodynamic forces apparently operates.

In this stable attitude, the component of $\bar{F}$ perpendicular to the relative velocity vector produces lift. Because of the spherical shape of the heat shield, the stable attitude remains relatively unchanged throughout the entry phases.

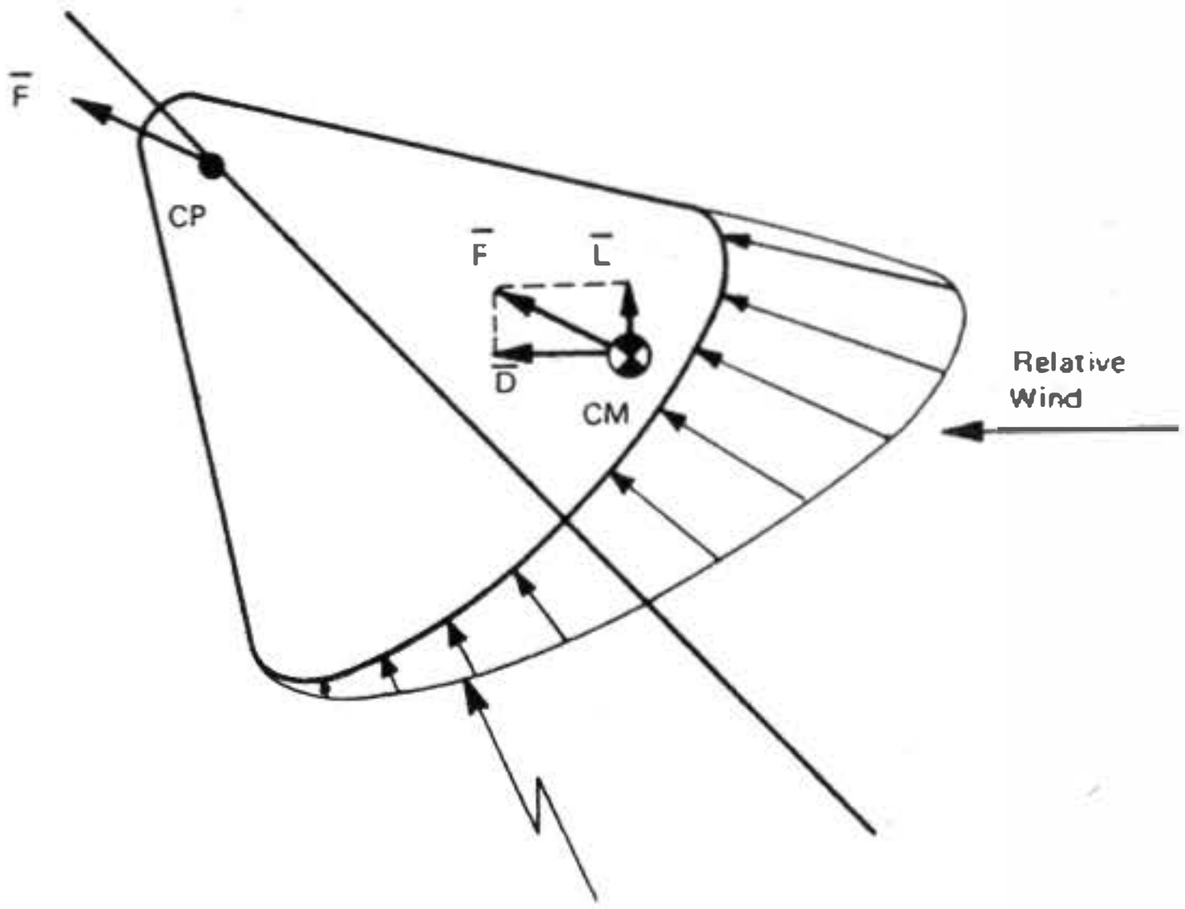

Lift Modulated Entry

During earth entry, steering is accomplished by orienting the lift vector ($\bar{L}$) so that the resulting specific forces satisfy the entry guidance objectives. The lift vector is rotated about the Roll Stability Axis according to roll commands issued by the AGC.

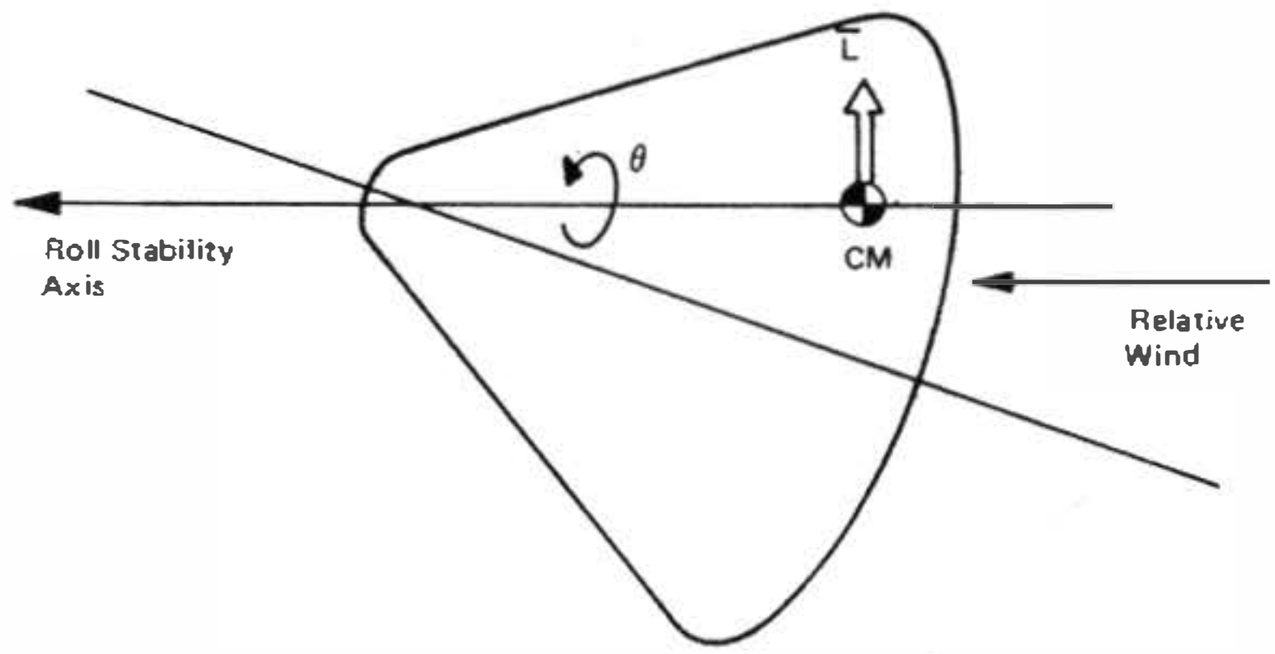

A roll angle (θ) of 0 degrees causes the lift vector to be up along the vertical and produces maximum downrange flight. A roll angle of ±90 degrees puts the lift vector in the local horizontal plane, producing maximum crossrange (or lateral) flight.

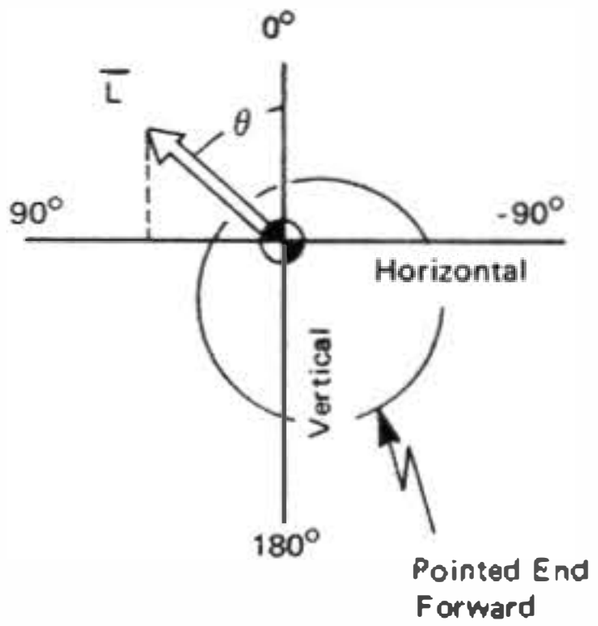

The entry control programs are designed to calculate the roll angle (θ) which will produce the vertical component of lift necessary to satisfy a guidance objective (constant drag flight, downrange target acquisition, and so forth). Crossrange control is maintained by choosing the proper sign of roll angle in order to reduce lateral errors.

Lift modulated flight can significantly reduce the peak accelerations experienced during entry, as shown below.

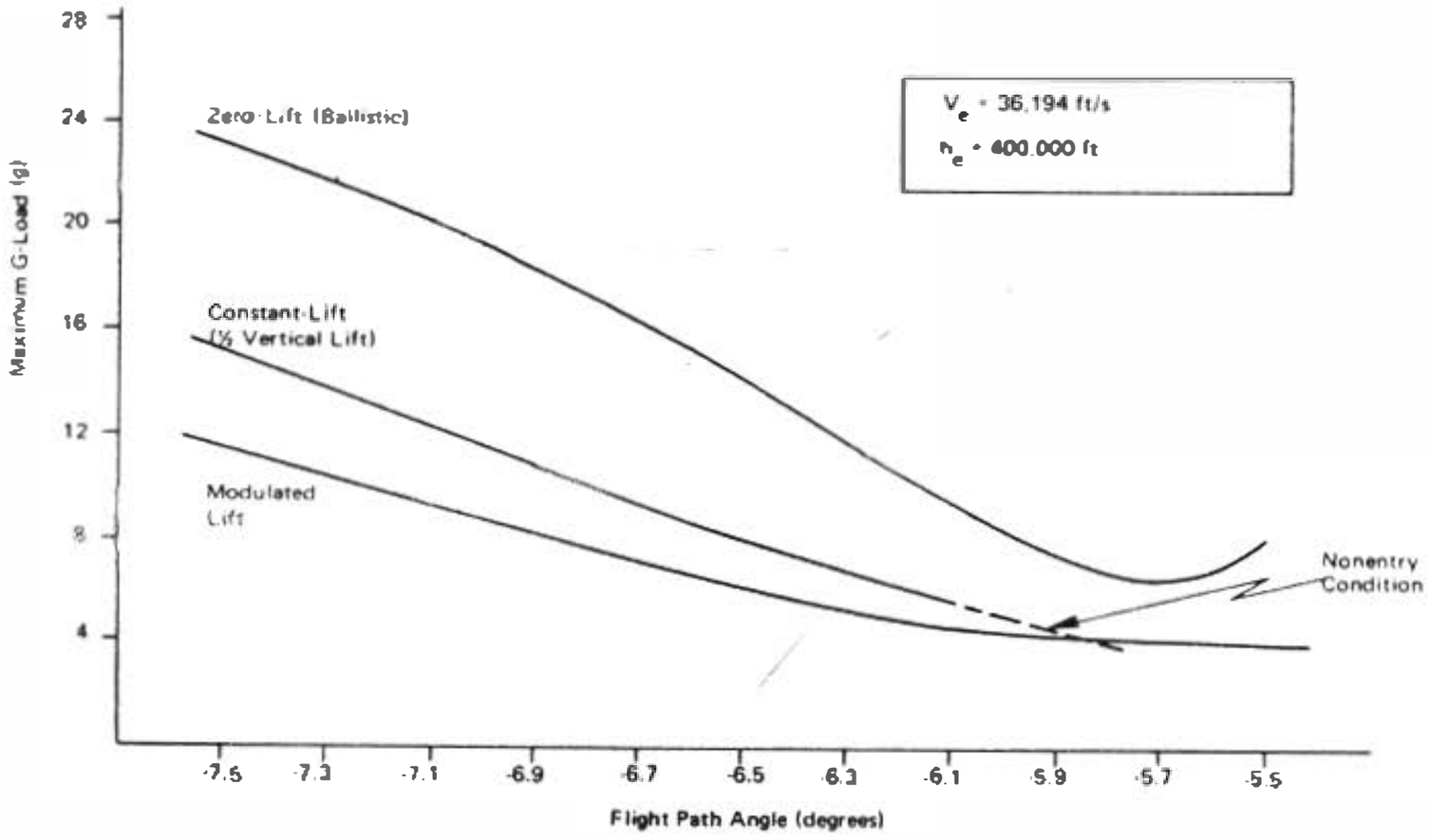

The maneuver footprint for a GNCS-controlled entry utilizing modulated lift is approximately 2,500 nautical miles in downrange and 250 nautical miles in crossrange. A typical entry footprint for a lunar return mission is shown below. A backup control procedure – the EMS ranging technique – defines the maximum range limit of 3,500 nautical miles.

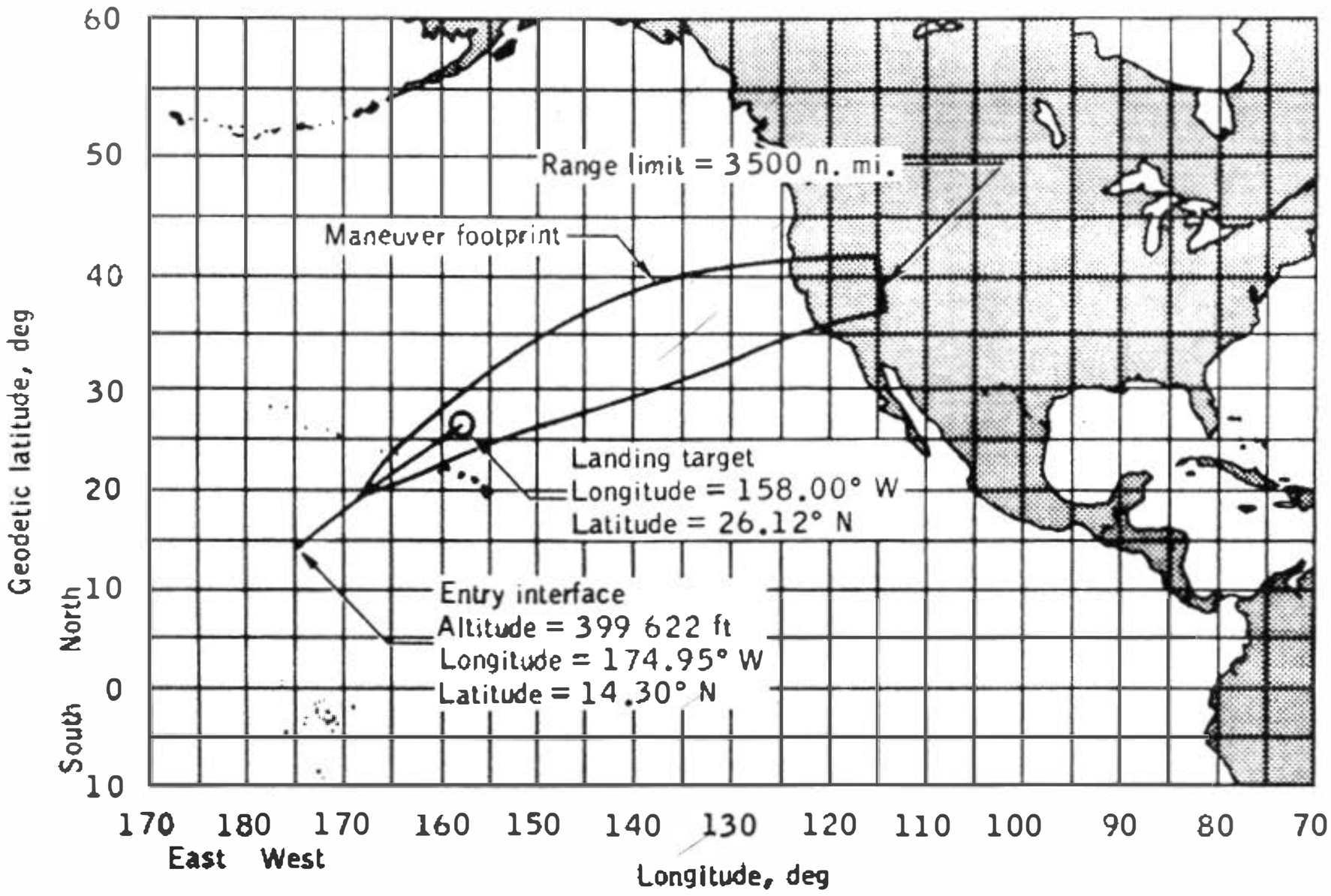

Entry Control Equations

The entry guidance equations are solved every 2 seconds in the AGC. Navigation and autopilot functions are also performed during this computation cycle.

The guidance equations below are used during the entry phases associated with a nominal lunar return entry. Equation I (targeting) is executed every pass through the computation loop. Equations II and III are executed during their particular entry phases for downrange steering. Lateral steering is done by Equation IV dependent upon certain logic constraints in the AGC. The roll angle needed to meet the above equations is calculated using Equation V.

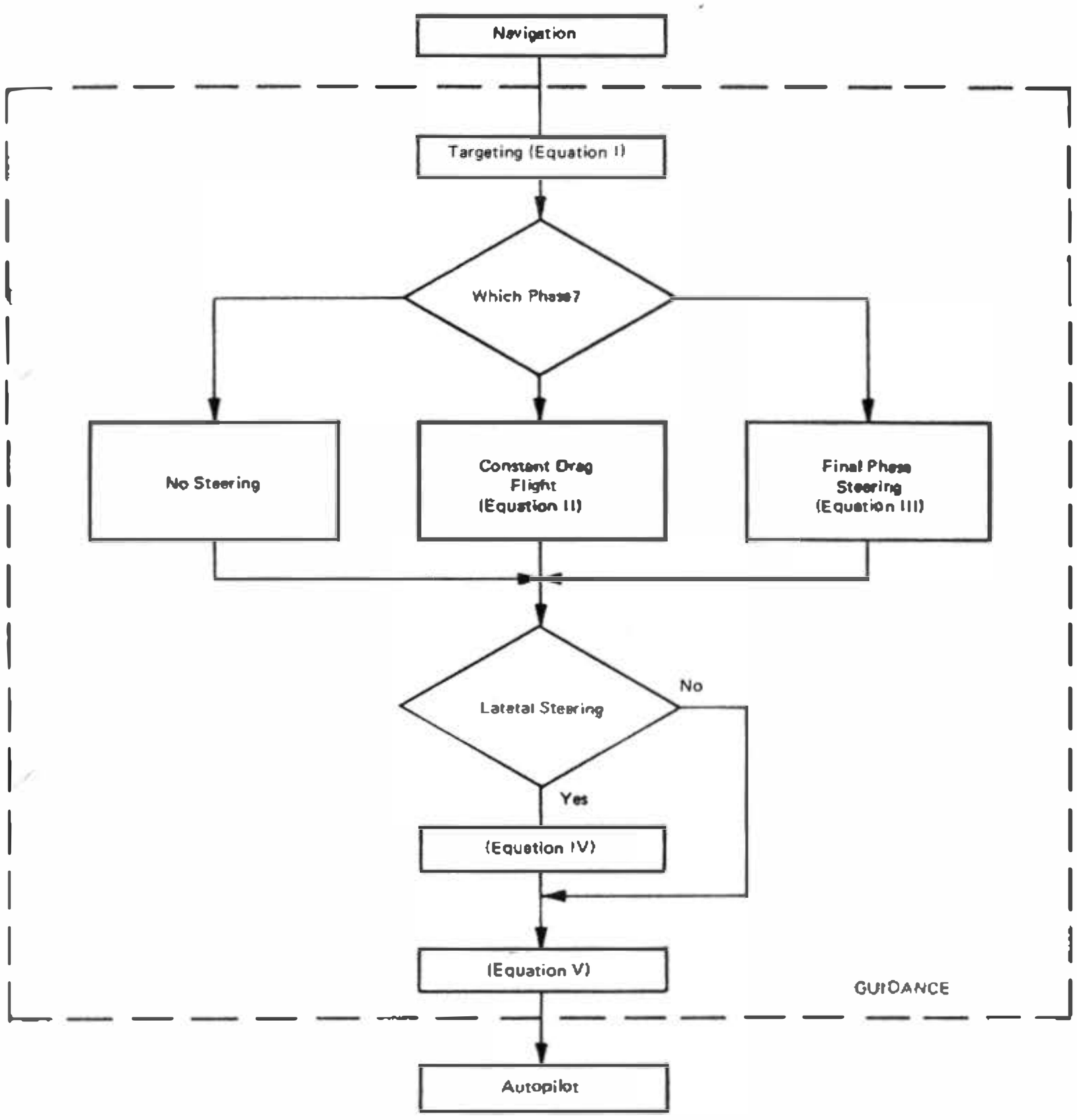

Equation I: Landing Point Targeting Equations

During the early entry phases, a unit vector is calculated which points from the earth's center to an estimated splash point. This initial target vector ($\bar{1}_{RI0}$), together with unit vectors in the equatorial plane directed easterly ($\bar{1}_{RTE}$) and in the target meridian ($\bar{1}_{RTN}$), is used as a reference from which a new target vector ($\bar{\bar{1}}_{RT}$) is calculated based on an updated estimate of time-to-splash.

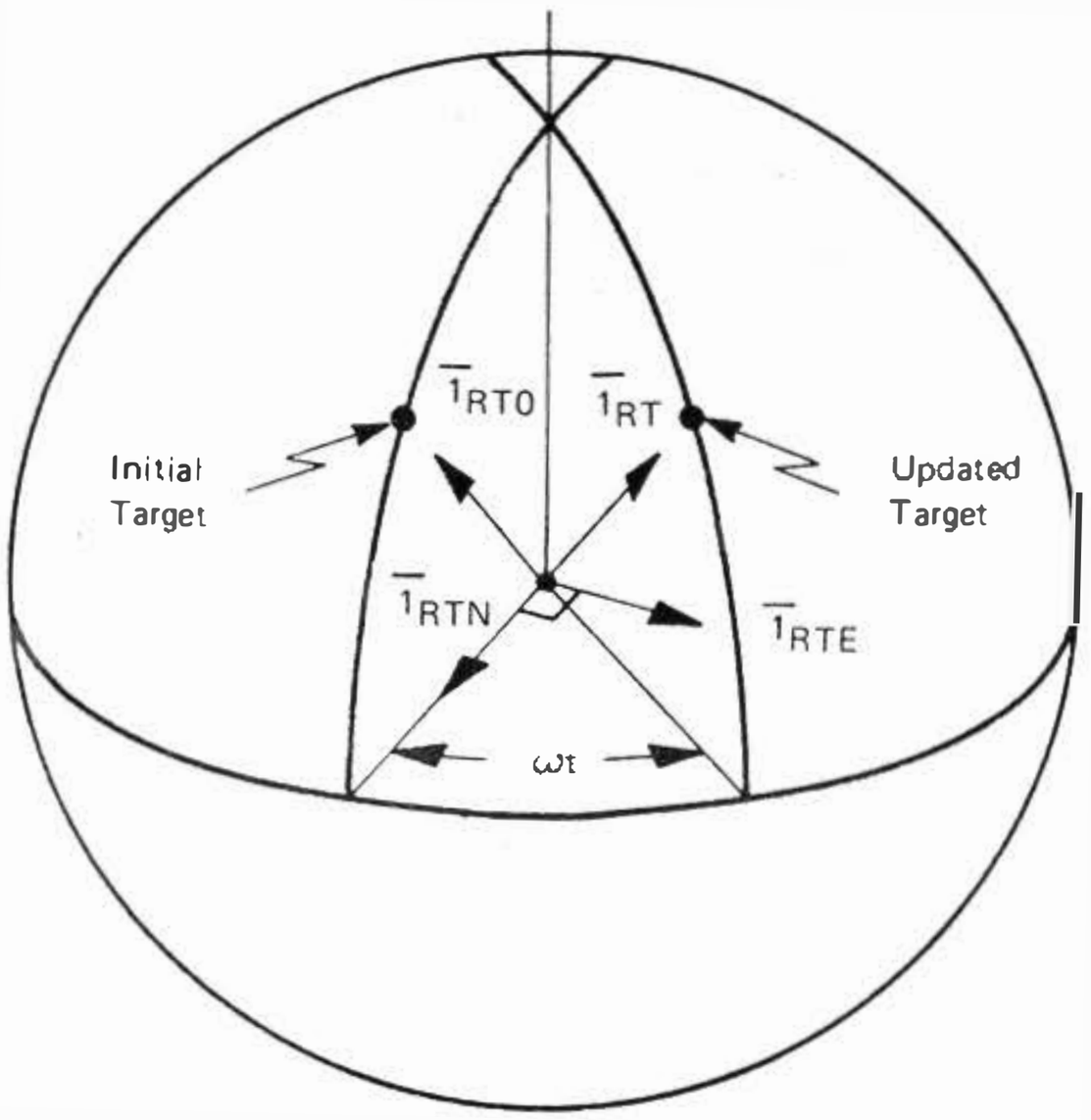

$$\bar{1}_{RT} = \bar{1}_{RT0} + \bar{1}_{RTN} [\cos(\omega t) - 1] + \bar{1}_{RTE} \sin(\omega t)$$

where (ωt) is the amount of earth's rotation for the difference between the old and new estimate of time-to-splash.

Based upon the new target vector $(\bar{1}_{RT})$, the downrange angle from the spacecraft to the splash point is computed using:

$$\theta_H = \arccos\left\{ \bar{1}_{RT} \cdot \text{Unit } \bar{R} \right\} \text{(radians)}$$

The crossrange error from the present flight plane is calculated as follows:

$$\text{LATANG} = \bar{1}_{RT} \cdot \text{Unit } (\bar{V} \times \bar{R}) \quad \text{(radians)}$$

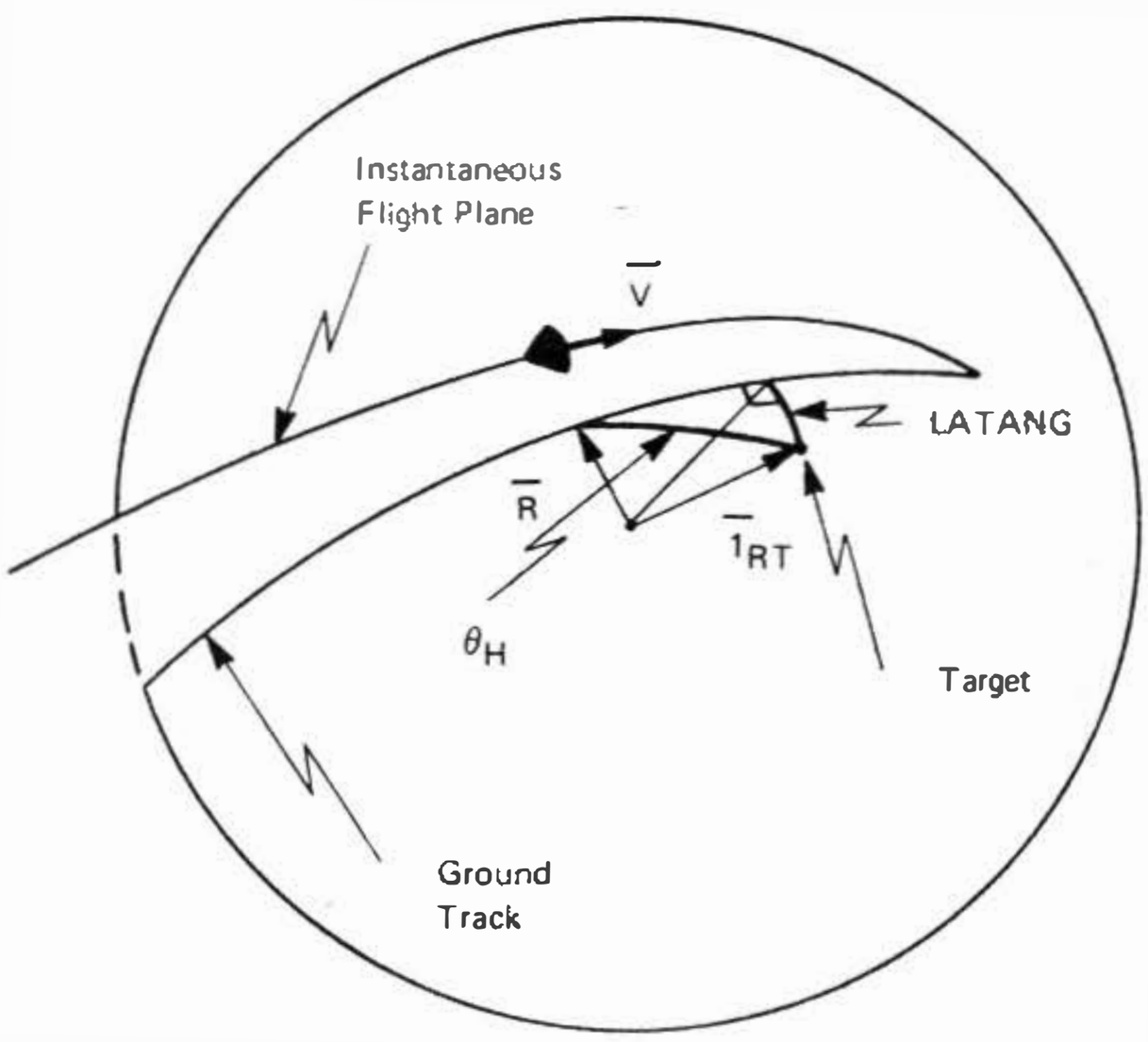

Equation II: Constant-Drag Flight Equation

Reduction of near-parabolic velocities (associated with the lunar return mission) to a point where capture in the earth's atmosphere is assured, is accomplished by flying a constant-drag trajectory.

Constant-drag guidance is achieved using an on-board computed reference trajectory and constant guidance factors for compensation of off-nominal conditions. The control refrence parameters are computed using the following constant drag relationships.

$$(L/D)_{Ref} = -\left(\frac{V^2}{R} - g\right)\frac{1}{D_0} \text{ (unitless)}$$

$$\dot{R}_{Ref} = \frac{2D_0}{\beta V} \text{ (ft/s)}$$

$$D_{Ref} = D_0 \text{ (ft/s}^2\text{)}$$

where

V = velocity (ft/s)

R = radial distance (ft)

g = gravity (ft/s^2)

D_0 = desired drag level (ft/s^2)

β = constant associated with atmosphere $\left(\frac{1}{ft}\right)$

Gain factors were chosen which relate perturbations in drag and altitude *rate* to the reference L/D.

$$(L/D)_{control} = (L/D)_{Ref} + 0.01\,(D - D_{Ref}) - 0.002\,(\dot{R} - \dot{R}_{Ref})$$

Equation III: Final Phase Equation

Steering through the denser portions of atmosphere is accomplished using a terminal control method of guidance. A mean terminal glide trajectory is prestored into the AGC. Linear perturbation coefficients, used to adjust for deviations in flight parameters from nominal values, are also stored. Using velocity as the independent variable, the various quantities in storage are chosen which are used in the basic control equation:

$$(L/D)_{control} = (L/D)_{Ref} + K_1\left\{(R - R_{Ref}) + K_2\,(D - D_{Ref}) + K_3\,(\dot{R} - \dot{R}_{Ref})\right\}$$

where

$(L/D)_{Ref}$ = constant value (≈ 0.27)

R_{Ref} = reference range-to-go (radians)

D_{Ref} = reference drag (ft/s^2)

$\dot{R}_{Ref}$ = reference altitude rate (ft/s)

K_1 = sensitivity of L/D to deviations in range (unitless)

K_2 = sensitivity of range to deviations in drag level (radians/ft/s^2)

K_3 = sensitivity of range to deviations in altitude rate (radians/ft/s)

Equation IV: Crossrange (or Lateral) Control

Crossrange control is maintained only when the lateral error (LATANG) is in excess of a computed deadband limit. This limit (somewhat less than the crossrange capability of the spacecraft) is computed every 2 seconds as a function of spacecraft velocity.

When this limit is exceeded the sign of the commanded roll angle (K2ROLL) is changed so that the horizontal component of lift causes the spacecraft to steer laterally toward the target.

Equation V: Commanded Roll Angle Equation

Using previously determined quantities (K2ROLL and $L/D_{control}$) the commanded roll angle is calculated by

$$ROLLC = (K2ROLL)\ \text{arc-cos}\left[\frac{L/D_{control}}{L/D_{Ref}}\right] \quad \text{(degrees)}$$

where

$$L/D_{Ref} \simeq 0.3 \text{ (unitless)}$$

Entry Control Programs

The guidance function, which incorporates the entry control equations previously described together with certain logic decisions, can be considered as a basic set of AGC software programs (P60's). The programs are associated with various phases of the entry profile as described below.

P61 – Entry Preparation Program

a. Purpose: Start navigation, check IMU alignment, and provide EMS initialization data in case of communications failures.

b. Initiation: Astronaut keys DSKY – V37E 61E

c. Steering: None, lift vector is oriented full-up (0 degrees) or full-down (180 degrees), according to the astronaut specifications.

d. DSKY Displays:

V06N61

R1 – Impact latitude	Latitude of splash point
R2 – Impact longitude	Longitude of splash point
R3 – Heads up/down	±1

V06N60

R1 – G max	Maximum predicted g-load
R2 – V predicted	Predicted velocity at EI (400 K ft)
R3 – γ_{EI}	Predicted entry angle at EI

V06N63

R1 – RTOGO	Range-to-go from 297,431-foot altitude
R2 – V_{io}	Predicted velocity at 297,431-foot altitude
R3 – T_{fe}	Time to 297,431-foot altitude

P62 – CM/SM Separation and Preentry Maneuver Program

a. Purpose: Notifies crew when GNCS is prepared for CM/SM separation. Also orients the spacecraft to the entry attitude.

b. Initiation: P62 entered when P61 completed and the astronaut keys PROCEED after final P61 display.

c. Steering: None, lift vector orientation maintained.

d. DSKY Displays:

V50N25
R1 – 00041 Request to separate CM/SM
R2 Blank
R3 Blank

V06N61
R1 – Impact latitude
R2 – Impact longitude
R3 – Heads up/down

V06N22
R1 – AOG
R2 – AIG
R3 – AMG
} Desired final gimbal angles at EI

P63 – Entry Control Initialization Program

a. Purpose: Initializes the entry targeting and guidance equations.

b. Initiation: P63 entered automatically when P62 achieves the entry attitude.

c. Steering: None, lift vector orientation maintained.

d. DSKY Displays:

V06N64
R1 – G Present g-load
R2 – V_i Present velocity
R3 – RTOGO Range to the target

P64 – Post 0.05 g Program

a. Purpose: Perform initial steering while awaiting subsequent phases.

b. Initiation: P64 is entered automatically when 0.05 g is sensed by the GNCS.

c. Steering:

When 0.05 g is sensed, a calculation is made to determine position of spacecraft in the entry corridor, and the lift vector is positioned full-up or full-down accordingly. The orientation is maintained until a precomputed drag level is exceeded (somewhat less than 1.5 g).

A constant drag trajectory is flown ($\approx$ 4 g) until the altitude rate becomes greater (more positive) than -700 ft/s.

Range-to-go checks are made to determine whether the available range will permit a controlled skip maneuver. Because the nominal range-to-target at EI is 1,250 nmi, this requirement is never satisfied and the constant-drag flight is continued.

A predicted exit velocity for the hypothetical skip maneuver will decrease below 18,000 ft/s and exit is made to the final phase.

d. DSKY Displays

V06N74

R1 – 8ETA	Commanded roll
R2 – V_i	Inertial velocity
R3 – G	Present g-load

P67 – Final Phase Program

a. Purpose: Steer through the dense portion of atmosphere and achieve the planned splash point.

b. Initiation: P67 is entered automatically from P64 for the nominal lunar return entry.

c. Steering: Steering is done using a terminal type controller based on a prestored nominal trajectory.

Guidance is terminated when velocity drops below 1,000 ft/s.

d. DSKY Displays:

V06N66

R1 – BETA	Commanded roll angle
R2 – XRNGERR	Crossrange error
R3 – DWNRGER	Downrange error

V16N67

R1 – RTOGO	Range to target
R2 – LAT	Present latitude
R3 – LONG	Present longitude

TYPICAL CM/SM SEPARATION ATTITUDE

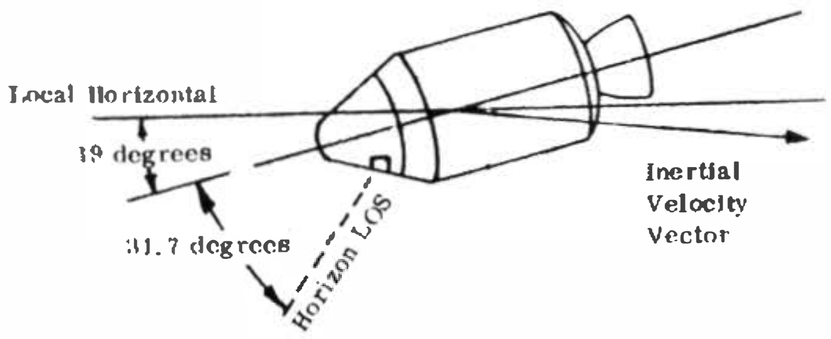

TYPICAL ATTITUDE AT ALTITUDE OF 400,000 FEET

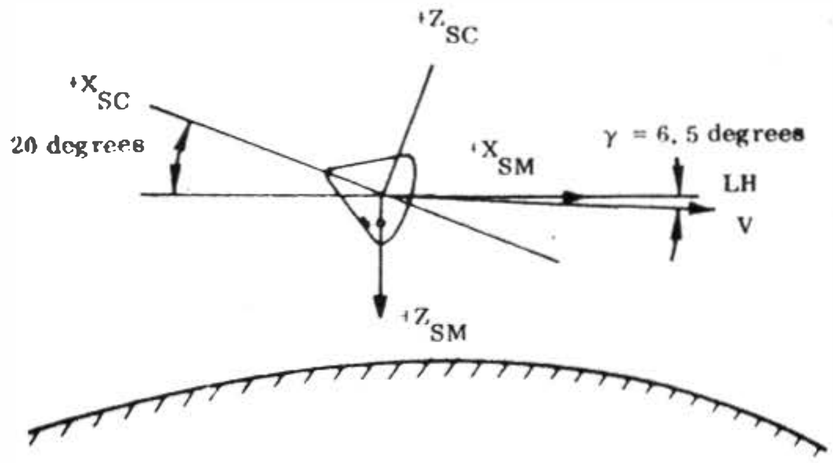

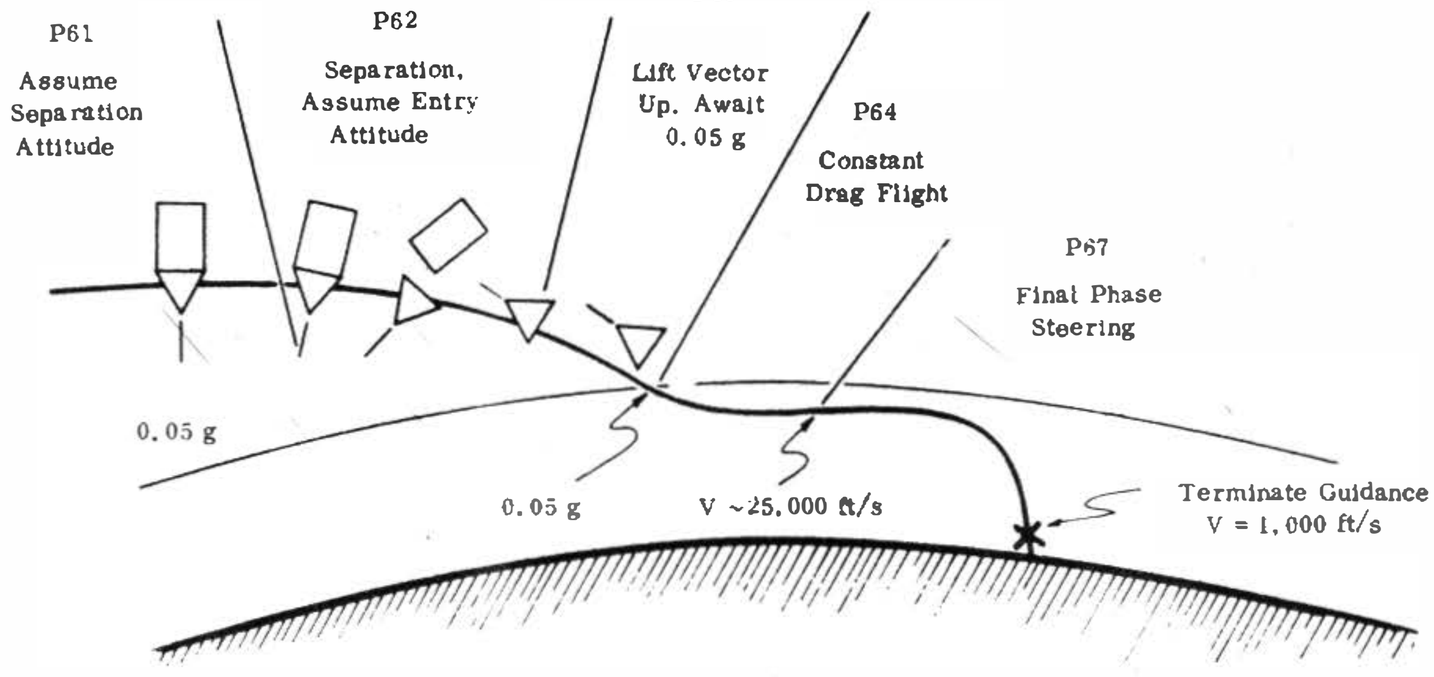

TYPICAL ENTRY PROGRAM SEQUENCE OF EVENTS

LB-171

APOLLO MISSION SPLASH POINT SUMMARY

Mission	Planned Target		Final DSKY Reading		Total DSKY Error Nmi Δ	Ship Splash Report		Total Recovery Ship Reported Error Nmi	Best-Estimate Trajectory (BET) Report		Total (official) Error Nmi	Remarks
	North Lat	Weat Long	North Lat	Weat Long		North Lat	Weat Long		orth Lat	Weat Long		
Apollo 7	27.61	64.17	27.63	64.18	1.3	27.54	64.07	7.3	27.64	64.15	2.1	Earth Orbital
Apollo 8	8.13	165.03	8.10	165.01	2.1	8.12	165.02	0.9	8.1	165.01	2.3	Lunar Return
Apollo 9	23.25	68.00	23.26	68.01	0.8	23.21	67.94	4.3	23.22	67.98	2.1	Earth Orbital
Apollo 10	-15.07	164.67	-15.07	164.65	1.2	-15.03	164.65	2.7	-15.06	164.65	1.3	Lunar Return
Apollo 11	-13.25	169.15	-13.30	169.15	1.2	-13.25	169.15	4.2	*	*	1.0*	Lunar Return
Apollo 12	-15.81	165.17	-15.87	165.16	3.6	-15.78	165.15	2.2	-15.83	165.17	1.1	Lunar Return
Apollo 13	-21.66	165.37	-21.64	165.38	1.3	-21.64	165.36	3.9	-21.64	165.36	1.0	Lunar Return
Apollo 14	-27.02	172.65	-27.02	172.65	0	-27.00	172.659	1.3	-27.01	172.66	.62	Lunar Return

* Onboard data lost during entry - miss distance is best estimate

ENTRY

P61

V37 Enter, 61 Enter

V06 N61 Flashing

V06 N60 Flashing, Record

V06 N63 Flashing, Used for EMS if no Communication

P62

V50 N25 Flashing, Request CM/SM Separation

V06 N61 Flashing

V06 N22, Monitor

P63

V06 N64, Monitor

							Area										
	X	X	X				R 0.05 g		X	X	X						
	X	X	X				P 0.05 g		X	X	X						
	X	X	X				Y 0.05 g		X	X	X						
							GET Hor Ck										
	X	X	X				P E1.17		X	X	X						
		0					Lat	N61		0							
							Long										
	X	X	X				Max g		X	X	X						
	+						V_{400K}	N60	+								
	-	0	0				γ_{400K}		-	0	0						
	+						RTGO EMS		+								
	+						VsO		+								
							RTT										
	X	X					RET 0.05 g		X	X							
	+	0	0				D_L Max	N69	+	0	0						
	+	0	0				D_L Min		+	0	0						
	+						V_L Max		+								
	+						V_L Min		+								
	X	X	X				D_O		X	X	X						
	X	X					RET V_{Circ}		X	X							
	X	X					RETBBO		X	X							
	X	X					RETEBO		X	X							
	X	X					RETDRO		X	X							
	X	X	X	X			SXTS		X	X	X	X					
	+					0	SFT E1-2		+					0			
	+				0	0	TRN		+				0	0			
	X	X	X				BSS		X	X	X						
	X	X					SPA E1-2		X	X							
	X	X	X				SXP		X	X	X						
	X	X	X	X			Lift Vector		X	X	X	X					

AREA	XXX	Splashdown Area Defined by Target Line.
R .05G P .05G Y .05G	XXX (deg) XXX (deg) XXX (deg)	Spacecraft IMU Gimbal Angles Required for Aerodynamic Trim at 0.05 g
GET (HOR CK)	XX:XX:XX (h:min:s)	Time of Entry Attitude Horizon Check at EI -17 Minutes.
P (HOR CK)	XXX (deg)	Pitch Attitude for Horizon Check at EI -17 Minutes.
LAT	±XX.XX (deg)	Latitude of Target Point.
LONG	±XXX.XX (deg)	Longitude of Target Point.
MAX G	XX.X (g)	Predicted Maximum Reentry Acceleration.
V_{400K}	XXXXX (ft/s)	Inertial Velocity at Entry Interface.
γ_{400K}	X.XX (deg)	Inertial Flight Path Angle at Entry Interface.
RTGO	XXXX.X (nmi)	Range to Go from 0.05 g to Target for EMS Initialization.
VIO	XXXXX. (ft/s)	Inertial Velocity at 0.05 g for EMS Initialization.
RRT	XX:XX:XX (h:min:s)	Reentry Reference Time Based on GET of Predicted 400K (DET Start).
RET .05G	XX:XX (min:s)	Time of 0.05 g from 400K (RRT).
D_L MAX	X.XX (g)	Maximum Acceptable Value of Predicted Drag Level (from CMC).
D_L MIN	X.XX (g)	Minimum Acceptable Value of Predicted Drag Level (from CMC).
V_L MAX	XXXXX (ft/s)	Maximum Acceptable Value of Exit Velocity (from CMC).
V_L MIN	XXXXX (ft/s)	Minimum Acceptable Value of Exit Velocity (from CMC).
DO	X.XX (g)	Planned Drag Level During Constant g.
RET V_{CIRC}	XX:XX (min:s)	Time from EI that S/C Velocity Becomes Circular.
RETBBO	XX:XX (min:s)	Time from EI to the Beginning of Blackout.
RETEBO	XX:XX (min:s)	Time from EI to the End of Blackout.
RETDRO	XX:XX (min:s)	Time from EI to Drogue Deployment.
SXTS	XX (octal)	Sextant Star for Entry Attitude Check.
SFT	XXX.X (deg)	Sextant Shaft Setting for Entry Attitude Check.
TRN	XX.X (deg)	Sextant Trunnion Setting for Entry Attitude Check.
BSS	XXX (octal)	Boresight Star for Entry Attitude Check Using the COAS.
SPA	XX.X (deg)	BSS Pitch Angle on COAS.
SXP	X.X (deg)	BSS X Position on COAS.

PERTURBATIONS

BOOST MONITOR
TLI
LUNAR ORBIT
LM DESCENT
LM ASCENT
TEI
ENTRY

BOOST MONITOR ERRORS

(Significant IMU Errors Only)

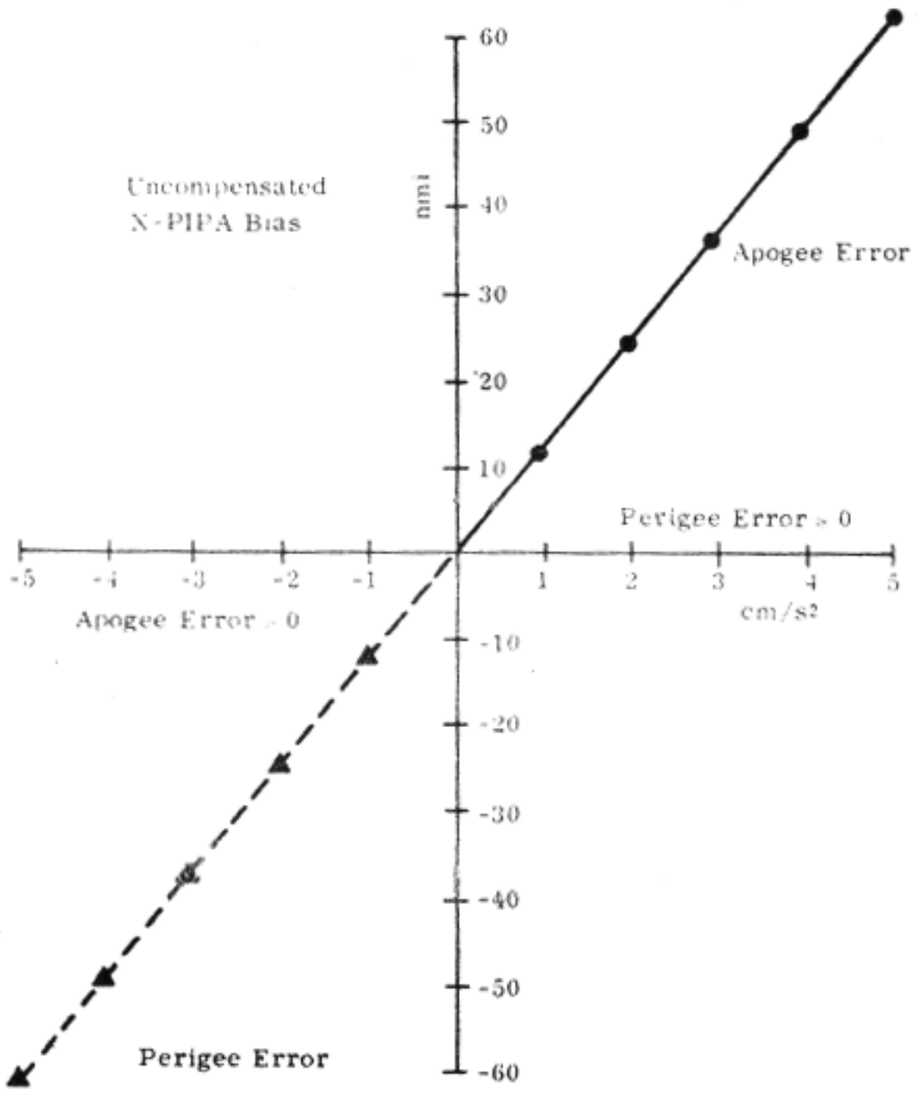

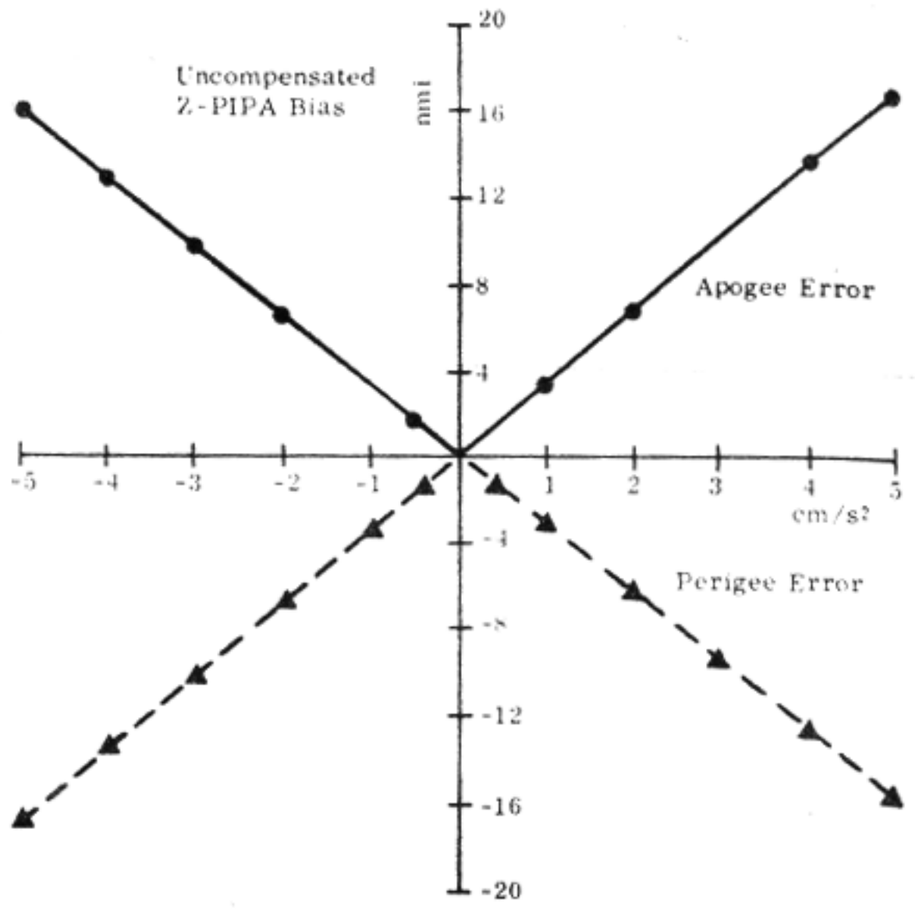

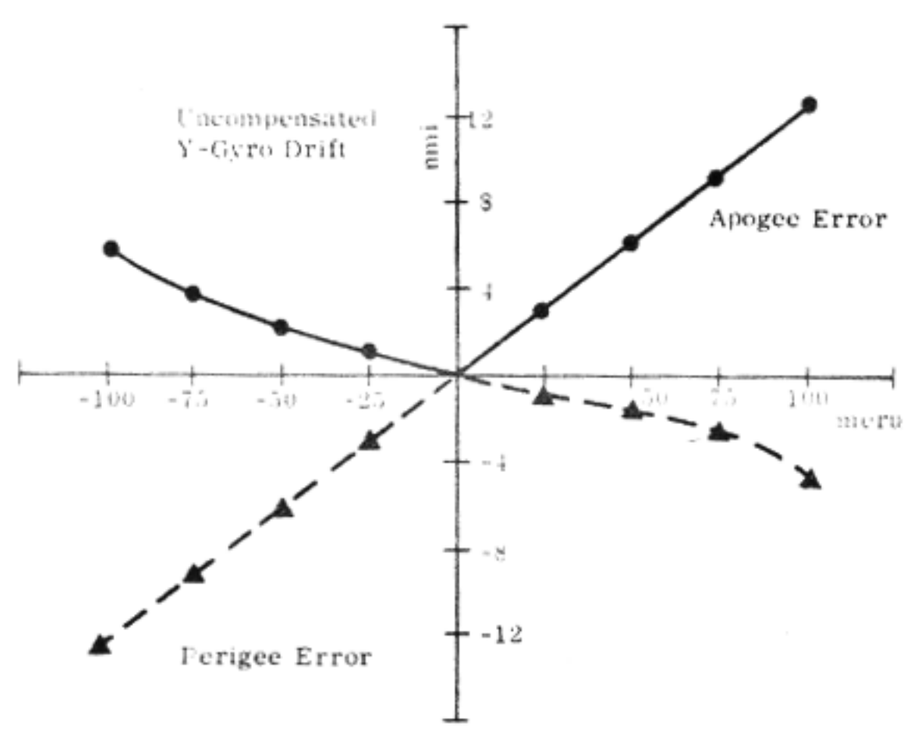

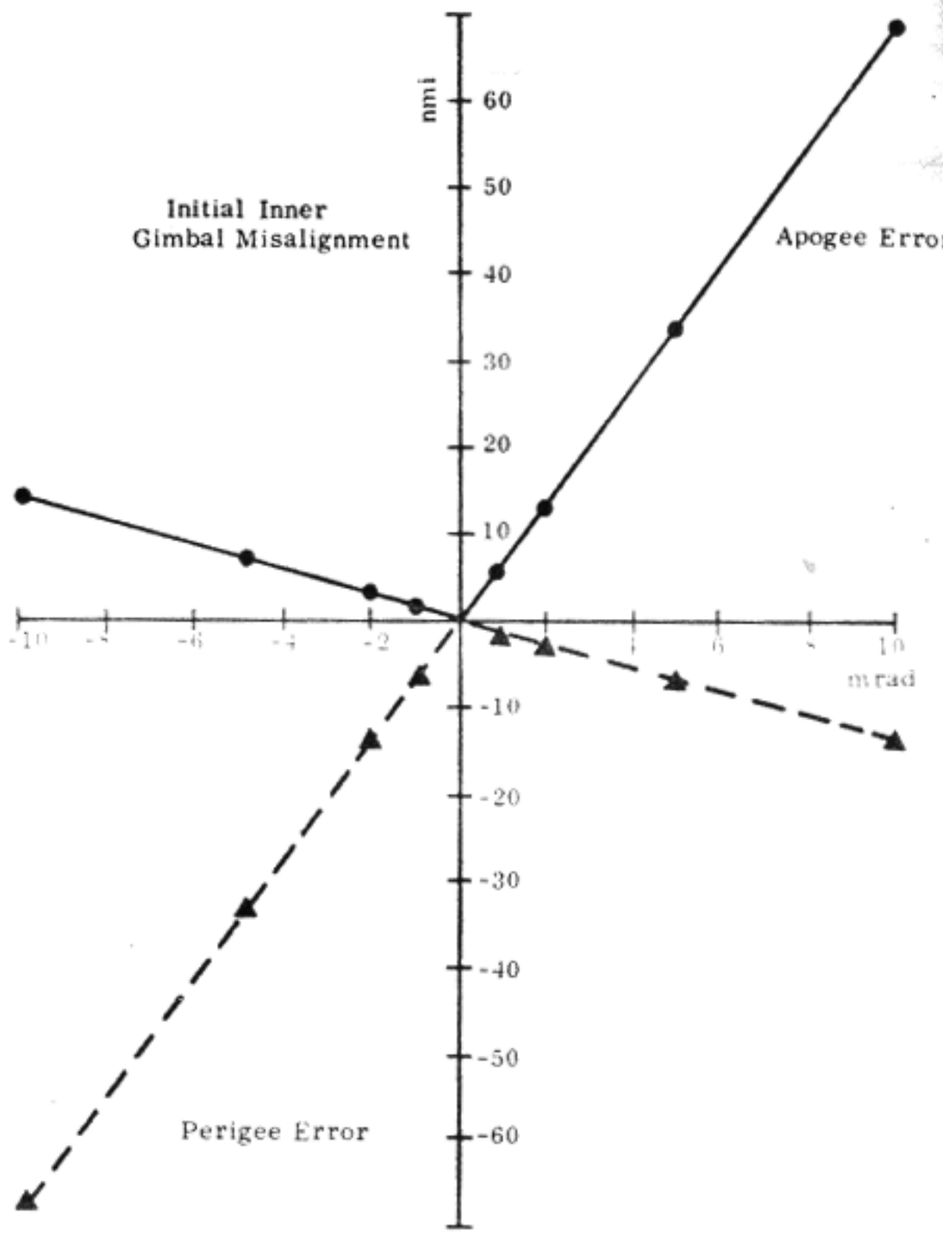

ERRORS IN PERICYNTHION

DUE TO VELOCITY ERRORS DURING TRANSLUNAR COAST

DIRECTION OF VELOCITY ERROR	ERROR IN PERICYNTHION (nmi/ft/s)
ERROR EXISTING AT TLI CUTOFF (2:55:53.5 GET)	
Along $\underline{V}$	97.72
Along $\underline{\bar{R}} \times \underline{V}$	-0.61
Along $\underline{\bar{V}} \times (\underline{R} \times \underline{V})$	-5.46
ERROR EXISTING AT MCC-1 (TLI + 9 hours) (11:56:2 GET)	
Along $\underline{V}$	29.82
Along $\underline{\bar{R}} \times \underline{V}$	-8.55
Along $\underline{\bar{V}} \times (\underline{R} \times \underline{V})$	-13.20
ERROR EXISTING AT MCC-2 (TLI + 28 hours) (30:56:2 GET)	
Along $\underline{V}$	18.01
Along $\underline{\bar{R}} \times \underline{V}$	-7.51
Along $\underline{\bar{V}} \times (\underline{R} \times \underline{V})$	-10.57
ERROR EXISTING AT MCC-3 (LOI - 22 hours) (56:31:14 GET)	
Along $\underline{V}$	8.48
Along $\underline{\bar{R}} \times \underline{V}$	-3.85
Along $\underline{\bar{V}} \times (\underline{R} \times \underline{V})$	-4.95
ERROR EXISTING AT MCC-4 (LOI - 5 hours) (73:31:14 GET)	
Along $\underline{V}^*$	0.34
Along $\underline{\bar{R}}^* \times \underline{V}^*$	0
Along $\underline{\bar{V}}^* \times (\underline{R}^* \times \underline{V}^*)$	2.78

* $\underline{R}$ and $\underline{V}$ are with respect to moon centered inertial system.

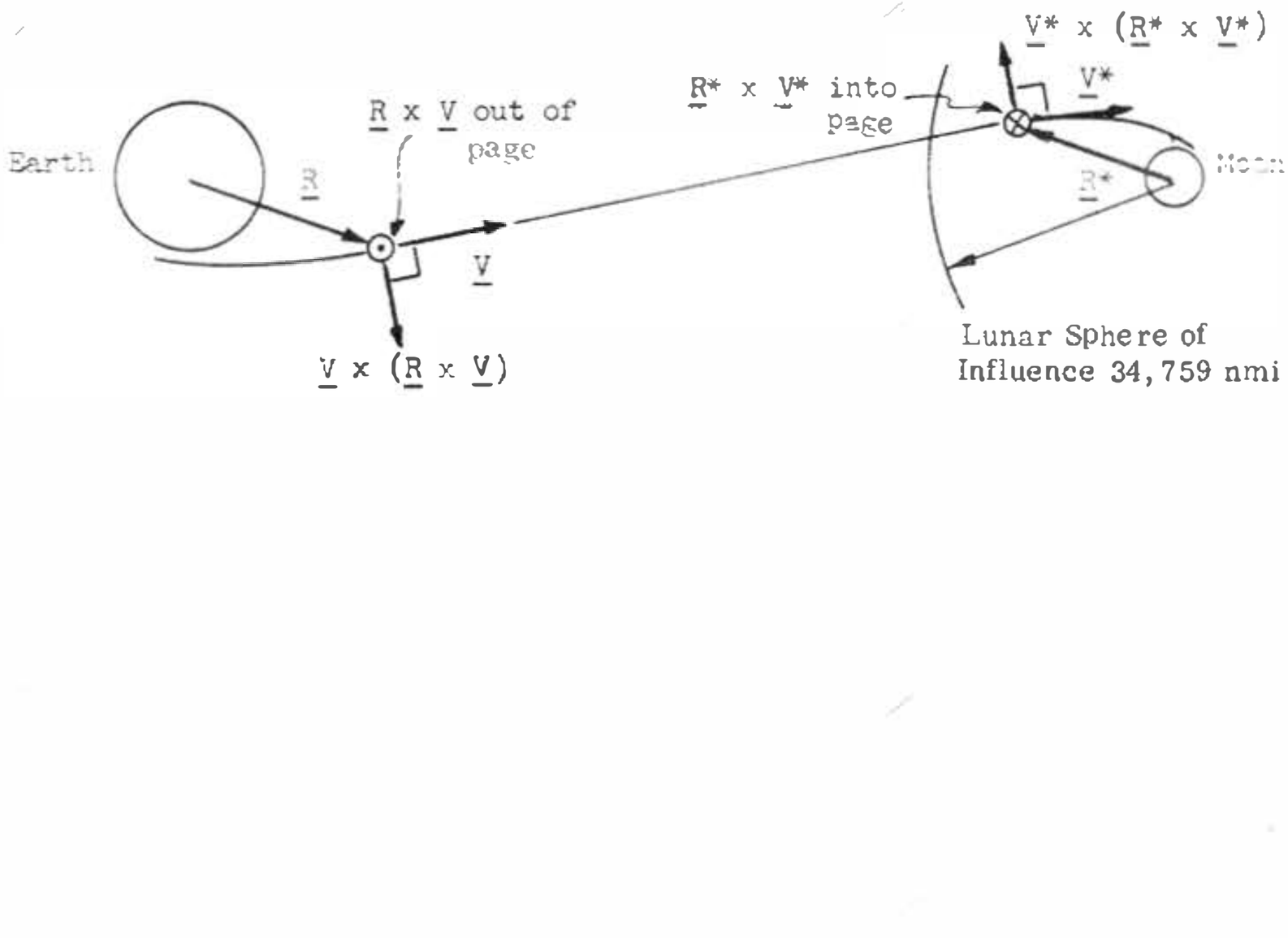

EFFECT OF INSTRUMENT ERRORS ON THRUST GUIDANCE

The thrust guidance used on Apollo, in simplified form, is as follows

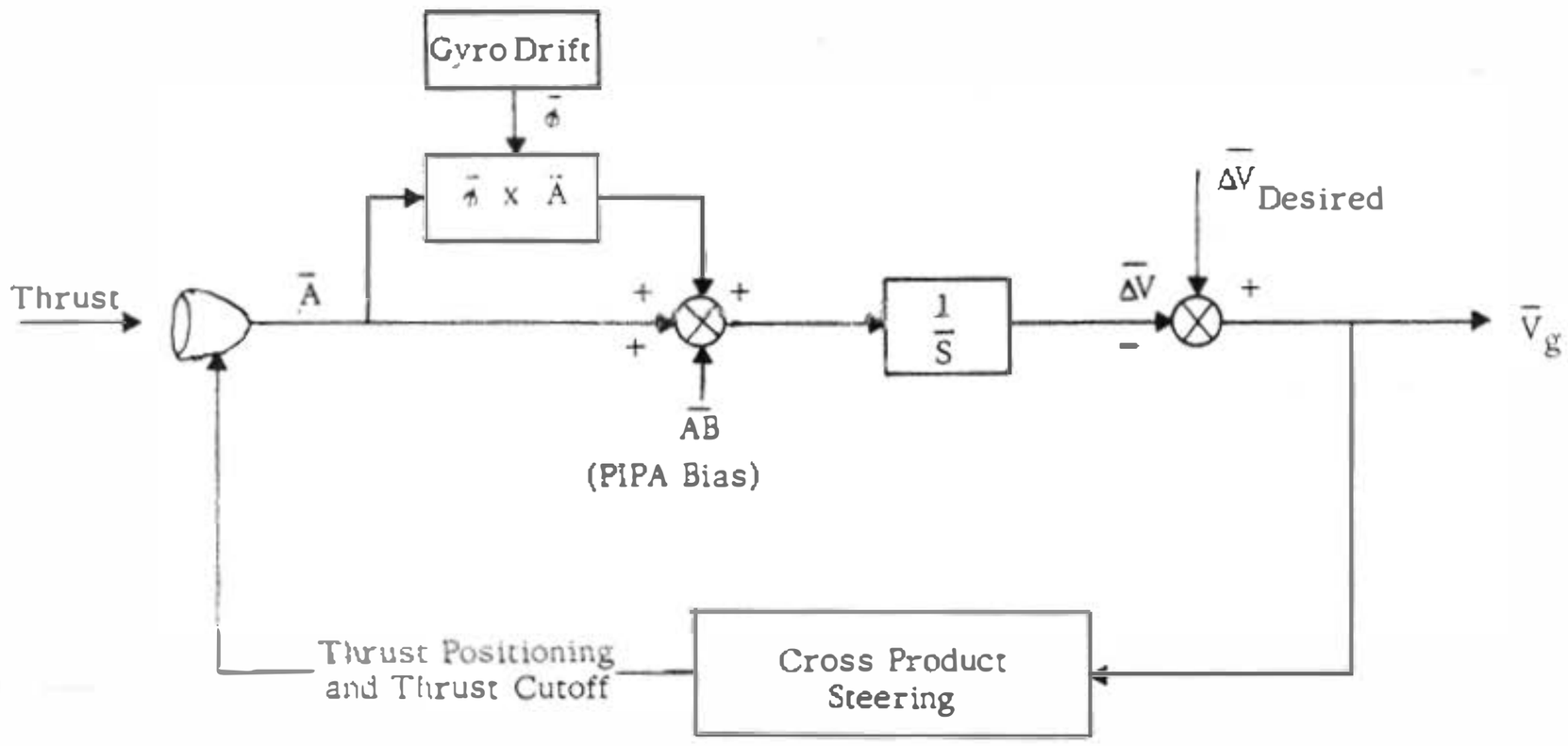

The above steering loop attempts to drive V_g (velocity to be gained) to zero. The inability of the steering loop to drive V_g to zero will result in velocity residuals at the end of the burn as displayed in P-40.

Since the thrust guidance loop performs its calculations on the difference between ΔV measured and ΔV desired, the velocity residuals displayed by P-40 at the end of each burn are <u>not</u> caused by instrument errors but by the inability of the steering loop to drive V_g to zero.

Instrument errors result in a difference between the measured incremental velocity change and the true incremental velocity change. Assuming perfect cross product steering ($V_{Residuals}$ = 0 in P-40) the resultant orbit will differ from the planned orbit. A measure of the difference between the actual and planned orbits is the error between actual and planned apolune and perilune.

The following tables relate incremental spacecraft velocity errors, during lunar orbit maneuvers, to errors in apolune and perilune. Knowing apolune and perilune errors, the table is used to obtain the required error in velocity, expressed in body axes coordinates. This velocity error is then converted to possible instrument errors by using the table relating PIPA bias and gyro drift to spacecraft velocity.

For Example: Assume a perilune error of +5.0 n mi and zero spacecraft residuals, as shown in P-40, after the DOI maneuver.

1. From the "Lunar Orbit Maneuver Perturbation" table, the most sensitive spacecraft velocity error is ΔV_X.

2. The required velocity error is

$$\Delta V_X = \frac{5.0 \text{ n mi}}{-.70 \text{ n mi/ft/sec}} = -7.14 \text{ ft/sec.}$$

3. The weighting factors relating instrument errors to velocity errors yield

$$-0.79 \times 10^{-2} \, AB_X \times 52.9 - 3.18 \times 10^{-2} \, AB_Z \times 52.9 = -7.14 \text{ ft/sec}$$

$$-.42 \, AB_x - 1.68 \, AB_z = -7.14 \text{ ft/sec}$$

Therefore:

$$\text{Uncompensated } AB_x = +17 \text{ cm/sec}^2$$

or

$$\text{Uncompensated } AB_z = +4.25 \text{ cm/sec}^2$$

EFFECT OF INSTRUMENT ERRORS ON THRUST GUIDANCE (CONTINUED)

The "Lunar Orbit Maneuver Perturbation" table also gives the transformation from stable member space to spacecraft body control axes space as follows:

$$\begin{bmatrix} X \\ Y \\ Z \end{bmatrix}_{S/C\ CSM} = \left[R_x\ (-7.25°)\right] \left[SM\text{-}NB\right] \begin{bmatrix} X \\ Y \\ Z \end{bmatrix}_{SM}$$

where:

$\left[SM\text{-}NB\right]$ = Transformation from stable member to the nav base using gimbal angles

$\left[R_x\ (-7.25°)\right]$ = Rotation matrix about X_{NB} of -7.25 degrees to transform from nav base space to spacecraft control axes space for the CSM.

For the LM

$$\begin{bmatrix} X \\ Y \\ Z \end{bmatrix}_{S/C\ LM} = \left[SM\text{-}NB\right] \begin{bmatrix} X \\ Y \\ Z \end{bmatrix}_{SM}$$

The purpose of this transformation is to indicate the location of the stable member with respect to thrust. The assumed gimbal angles are as follows:

	OUTER GIMBAL (degrees)	INNER GIMBAL (degrees)	MIDDLE GIMBAL (degrees)
LOI	0	0	0
DOI	0	284	[illegible]
CIRCULARIZATION	180	114	2
LOPC	0	0	[illegible]
LM TPI	0	100	0
TEI	0	0	0

For all maneuvers thrust is assumed along $+X_{S/C}$ axis.

APOLLO 15 LUNAR ORBIT MANEUVER PERTURBATIONS

MANEUVER	BODY AXES VELOCITY ERRORS	ERROR IN PERILUNE (nmi/ft/s)	ERROR IN APOLUNE (nmi/ft/s)	STABLE MEMBER TO SPACECRAFT CONTROL AXES TRANSFORMATION | SC | = | M | | SM |	REFSMMAT | SM | = | REFSMMAT | | BRS | BRS = BASIC REFERENCE SYSTEM
LOI	ΔV_X	-0.09	-0.68	$\begin{bmatrix} 1 & 0 & 0 \\ 0 & 0.992 & -0.126 \\ 0 & 0.126 & 0.992 \end{bmatrix}$	$\begin{bmatrix} 0.481 & -0.415 & -0.772 \\ 0.019 & -0.876 & 0.483 \\ -0.877 & -0.247 & -0.413 \end{bmatrix}$ = [Preferred]
	ΔV_Y	—	-0.31		
	ΔV_Z	-0.14	—		
DOI	ΔV_X	-0.70	—	$\begin{bmatrix} 0.242 & 0 & 0.970 \\ 0.122 & 0.992 & -0.031 \\ -0.963 & 0.126 & 0.240 \end{bmatrix}$	$\begin{bmatrix} 0.583 & 0.476 & 0.659 \\ -0.251 & -0.666 & 0.703 \\ 0.773 & -0.575 & -0.268 \end{bmatrix}$ = [Lunar Landing Site]
	ΔV_Y	—	—		
	ΔV_Z	—	—		
CSM Circularization	ΔV_X	0.32	0.42	$\begin{bmatrix} -0.407 & 0.033 & -0.913 \\ 0.100 & -0.992 & -0.080 \\ -0.908 & -0.124 & 0.400 \end{bmatrix}$	Same as Above
	ΔV_Y	—	—		
	ΔV_Z	-0.17	0.20		
LOPC	ΔV_X	0.05	—	$\begin{bmatrix} 1 & 0 & 0 \\ 0 & 0.992 & -0.126 \\ 0 & 0.126 & 0.992 \end{bmatrix}$	$\begin{bmatrix} -0.255 & -0.669 & 0.698 \\ -0.039 & -0.714 & -0.699 \\ 0.966 & -0.205 & 0.156 \end{bmatrix}$ = [Preferred]
	ΔV_Y	Graph A	Graph A		
	ΔV_Z	Graph B	Graph B		
TPI	ΔV_X	—	0.69	$\begin{bmatrix} -0.177 & 0 & -0.984 \\ 0 & 1 & 0 \\ 0.984 & 0 & -0.177 \end{bmatrix}$	$\begin{bmatrix} 0.655 & 0.663 & 0.746 \\ -0.229 & -0.719 & 0.656 \\ 0.972 & -0.207 & 0.112 \end{bmatrix}$ = [Lunar Liftoff]
	ΔV_Y	—	—		
	ΔV_Z	—	-0.25		
TEI	ΔV_X	—	—	$\begin{bmatrix} 1 & 0 & 0 \\ 0 & 0.992 & -0.126 \\ 0 & 0.126 & 0.992 \end{bmatrix}$	$\begin{bmatrix} -0.760 & -0.043 & -0.648 \\ 0.389 & 0.768 & -0.508 \\ 0.520 & -0.639 & -0.567 \end{bmatrix}$ = [Preferred]
	ΔV_Y	—	—		
	ΔV_Z	—	—		

-Indicates coefficient is less than 0.05 nmi/ft/s.

APOLLO 15 LOPC APOLUNE AND PERILUNE PERTURBATIONS

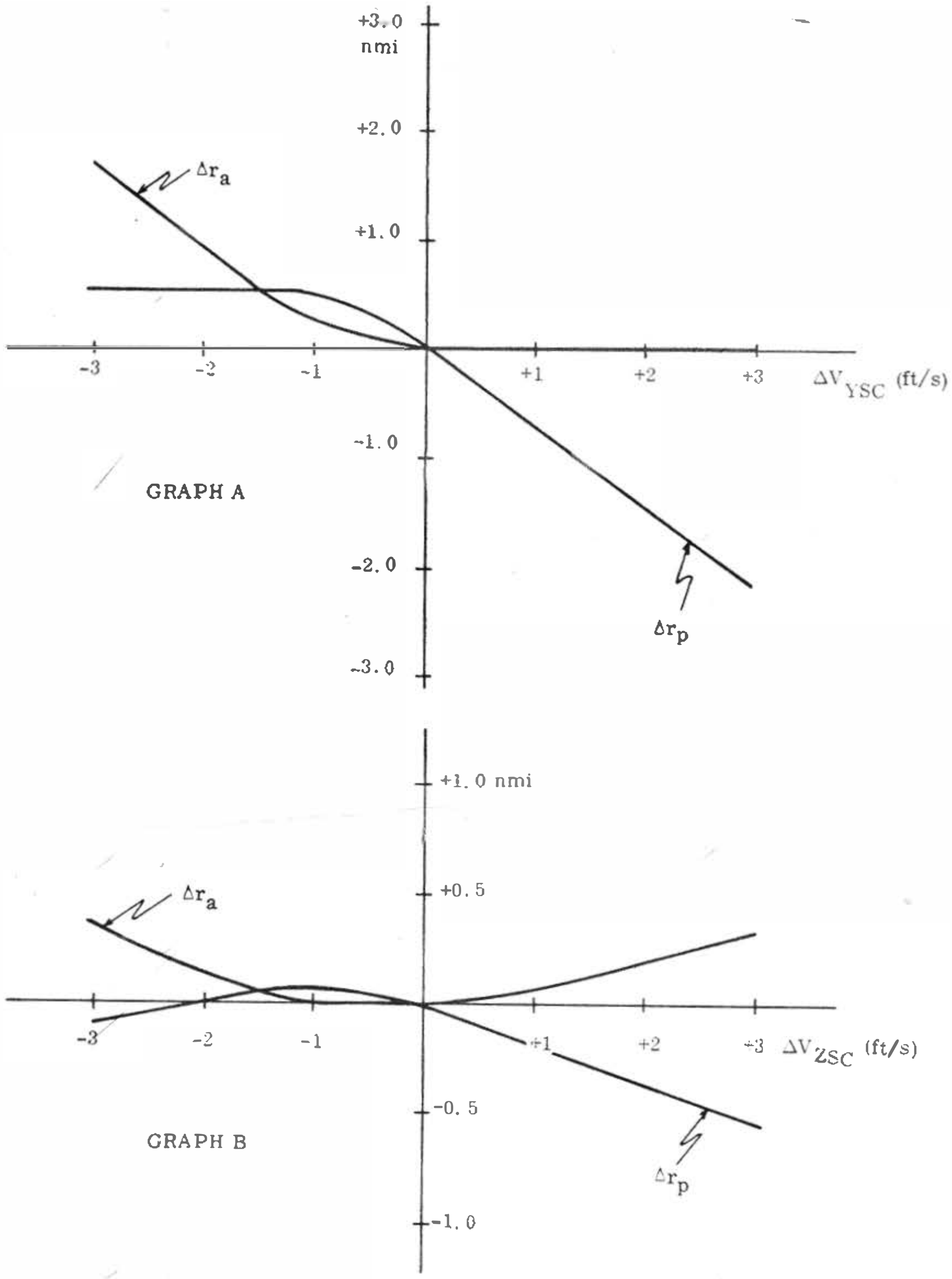

GRAPH A

GRAPH B

ΔV_{SC} ERRORS CAUSED BY GYRO DRIFTS $\left[\bar{\emptyset} \times \bar{A}\right]$ AND PIPA BIASES

GYRO DRIFTS - MERU

PIPA BIASES - CM/SEC^2

ΔV_{SC} - FT/SEC

ΔT_p - SEC (LENGTH OF BURN + 30 SECONDS FOR STARTUP OF AVERAGEG ROUTINE)

ΔT_g - SEC (TIME FROM LAST ALIGNMENT TO BURN)

WEIGHT FACTORS RELATE PIPA BIAS AND GYRO DRIFTS TO VELOCITY ERROR.

LOI

$\Delta V_{x_{SC}} = -3.28 \times 10^{-2}\ AB_x \Delta T_p$

$\Delta V_{y_{SC}} = +2.76 \times 10^{-5}\ NBDY\ \Delta T_g - 2.17 \times 10^{-4}\ NBDZ\ \Delta T_g - 3.25 \times 10^{-2}\ AB_y\ \Delta T_p + 0.41 \times 10^{-2}\ AB_z\ \Delta T_p$

$\Delta V_{z_{SC}} = -2.17 \times 10^{-4}\ NBDY\ \Delta T_g - 2.76 \times 10^{-5}\ NBDZ\ \Delta T_g - .41 \times 10^{-2}\ AB_y\ \Delta T_p - 3.25 \times 10^{-2}\ AB_z\ \Delta T_p$

DOI

$\Delta V_{x_{SC}} = -0.79 \times 10^{-2}\ AB_x\ \Delta T_p - 3.18 \times 10^{-2}\ AB_z\ \Delta T_p$

$\Delta V_{y_{SC}} = -1.46 \times 10^{-5}\ NBDX\ \Delta T_g + 0.19 \times 10^{-5}\ NBDY\ \Delta T_g - 0.36 \times 10^{-5}\ NBDZ\ \Delta T_g - 0.40 \times 10^{-2}\ AB_x\ \Delta T_p - 3.25 \times 10^{-2}\ AB_y\ \Delta T_p + 0.1 \times 10^{-2}\ AB_z\ \Delta T_p$

$\Delta V_{z_{SC}} = -0.19 \times 10^{-5}\ NBDX\ \Delta T_g - 1.50 \times 10^{-5}\ NBDY\ \Delta T_g + 3.16 \times 10^{-2}\ AB_x\ \Delta T_p - 0.41 \times 10^{-2}\ AB_y\ \Delta T_p - 0.79 \times 10^{-2}\ AB_z\ \Delta T_p$

CIRCULARIZATION

$\Delta V_{x_{SC}} = 1.33 \times 10^{-2}\ AB_x\ \Delta T_p - 0.11 \times 10^{-2}\ AB_y\ \Delta T_p + 3.00 \times 10^{-2}\ AB_z\ \Delta T_p$

$\Delta V_{y_{SC}} = -4.67 \times 10^{-6}\ NBDX\ \Delta T_g - 0.64 \times 10^{-6}\ NBDY\ \Delta T_g - 2.10 \times 10^{-6}\ NBDZ\ \Delta T_g - 0.33 \times 10^{-2}\ AB_x\ \Delta T_p + 3.25 \times 10^{-2}\ AB_y\ \Delta T_p + 0.27 \times 10^{-2}\ AB_z\ AT_p$

$\Delta V_{z_{SC}} = -0.52 \times 10^{-6}\ NBDX\ \Delta T_g + 5.12 \times 10^{-6}\ NBDY\ \Delta T_g - 0.42 \times 10^{-6}\ NBDZ\ \Delta T_g + 2.98 \times 10^{-2}\ AB_x\ \Delta T_p + 0.41 \times 10^{-2}\ AB_y\ \Delta T_p - 1.31 \times 10^{-2}\ AB_z\ \Delta T_p$

PLANE CHANGE

$\Delta V_{x_{SC}} = -3.28 \times 10^{-2}\ AB_x\ \Delta T_p$

$\Delta V_{y_{SC}} = 0.28 \times 10^{-5}\ NBDY\ \Delta T_g - 2.23 \times 10^{-5}\ NBDZ\ \Delta T_g - 3.25 \times 10^{-2}\ AB_y\ \Delta T_p + 0.41 \times 10^{-2}\ AB_z\ \Delta T_p$

$\Delta V_{z_{SC}} = -2.23 \times 10^{-5}\ NBDY\ \Delta T_g - 0.28 \times 10^{-5}\ NBDZ\ \Delta T_g - 0.41 \times 10^{-2}\ AB_y\ \Delta T_p - 3.25 \times 10^{-2}\ AB_z\ \Delta T_p$

LM TPI

$\Delta V_{x_{SC}} = 0.58 \times 10^{-2}\ AB_x\ \Delta T_p + 3.23 \times 10^{-2}\ AB_z\ \Delta T_p$

$\Delta V_{y_{SC}} = 5.29 \times 10^{-6}\ NBDX\ \Delta T_g - 0.95 \times 10^{-6}\ NBDZ\ \Delta T_g - 3.28 \times 10^{-2}\ AB_y\ \Delta T_p$

$\Delta V_{z_{SC}} = -5.37 \times 10^{-6}\ NBDY\ \Delta T_g - 3.23 \times 10^{-2}\ AB_x\ \Delta T_p + 0.58 \times 10^{-2}\ AB_z\ \Delta T_p$

TEI

$\Delta V_{x_{SC}} = -3.28 \times 10^{-2}\ AB_x\ \Delta T_p$

$\Delta V_{y_{SC}} = +0.28 \times 10^{-4}\ NBDY\ \Delta T_g - 2.20 \times 10^{-4}\ NBDZ\ \Delta T_g - 3.25 \times 10^{-2}\ AB_y\ \Delta T_p + 0.41 \times 10^{-2}\ AB_z\ \Delta T_p$

$\Delta V_{z_{SC}} = -2.20 \times 10^{-4}\ NBDY\ \Delta T_g - 0.28 \times 10^{-4}\ NBDZ\ \Delta T_g - 0.41 \times 10^{-2}\ AB_y\ \Delta T_p - 3.25 \times 10^{-2}\ AB_z\ \Delta T_p$

APOLLO 15 LUNAR ORBIT PARAMETERS (TYPICAL)

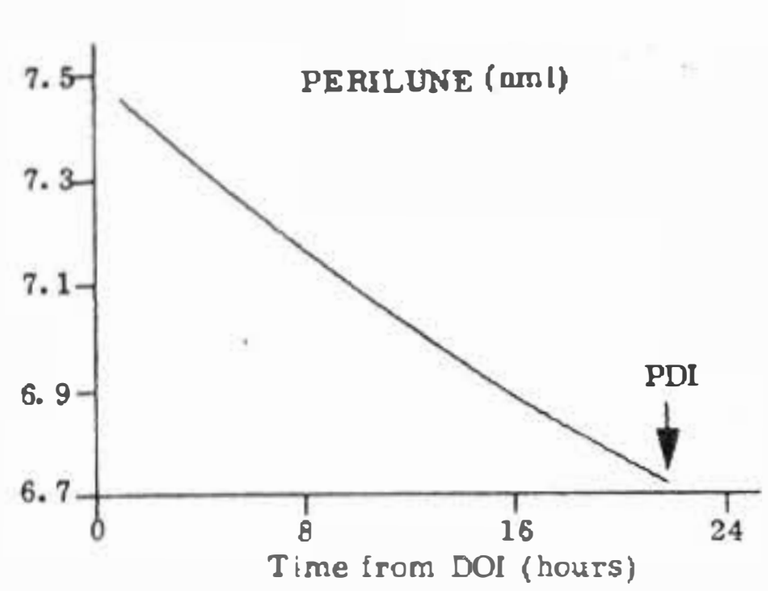

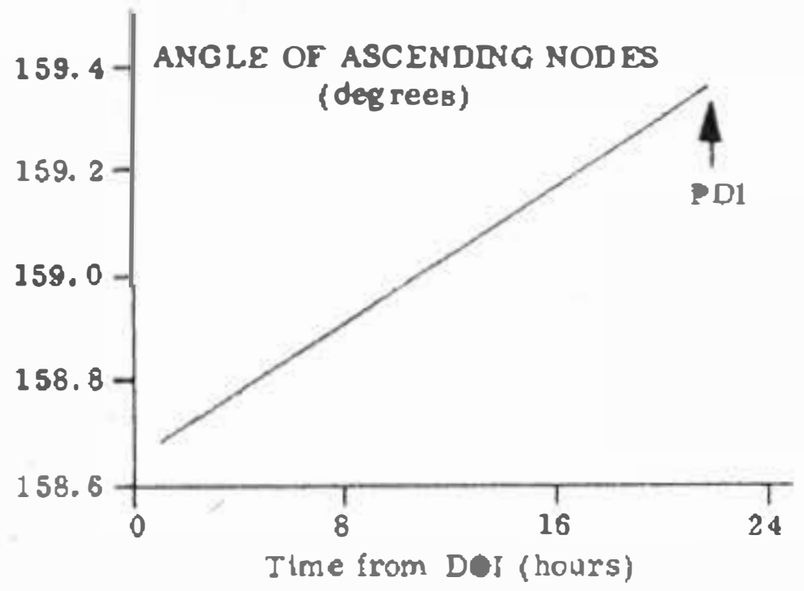

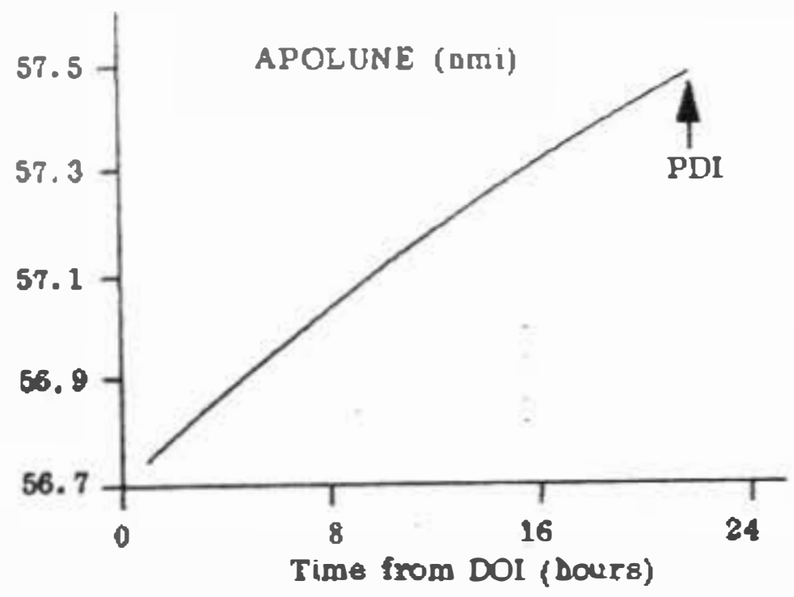

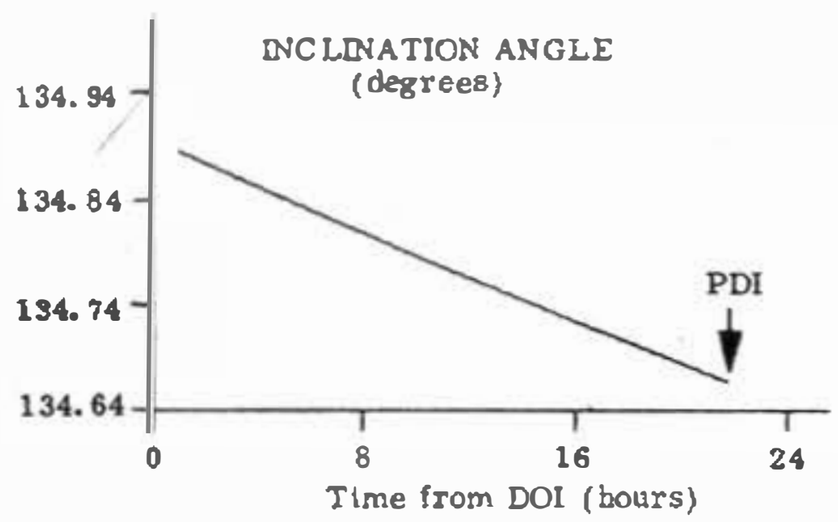

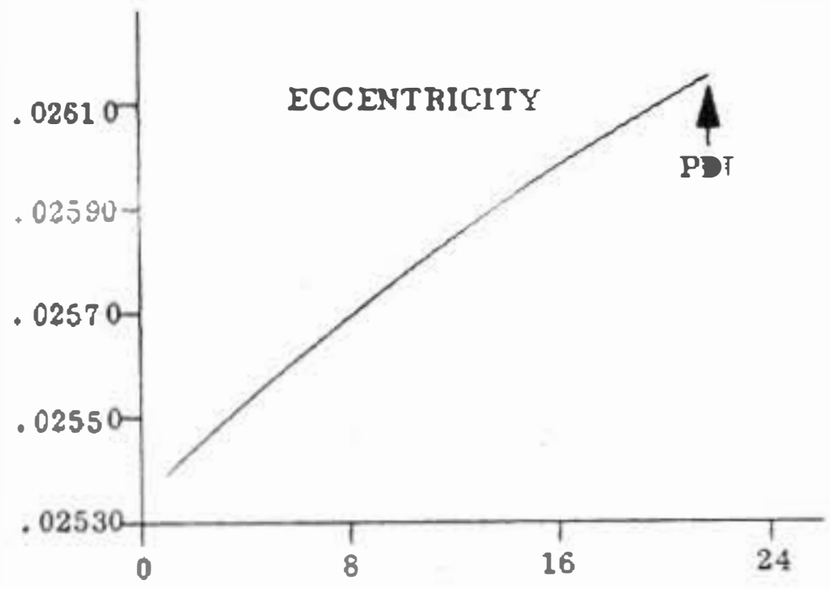

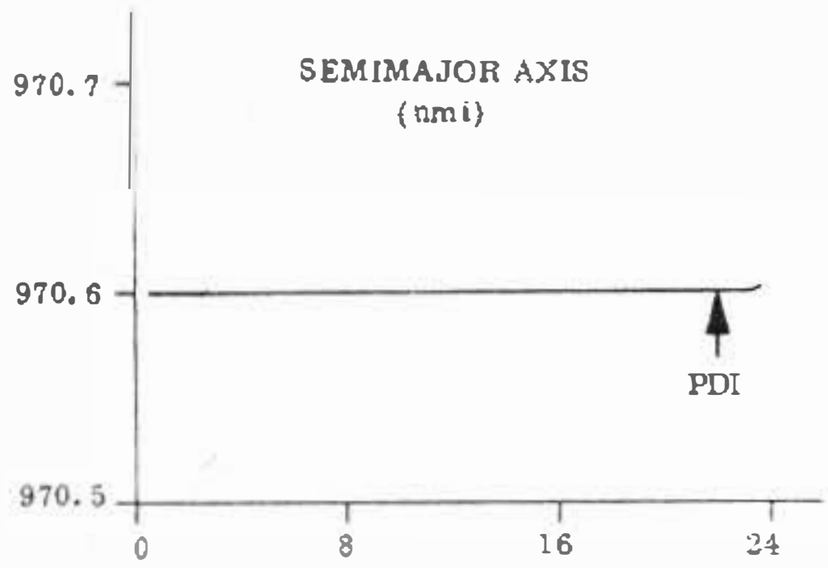

EFFECT OF INSTRUMENT ERRORS ON LUNAR LANDING POSITION APOLLO 15

INSTRUMENT ERROR	CROSS-RANGE ERROR (ft)	DOWN RANGE ERROR (ft)
PIPA BIAS (cm/sec^2)		
X	0	-202
Y	-3085	0
Z	0	-3082
IMU MISALIGNMENTS (mrad.)		
About X_{SM}	780	0
About Y_{SM}	0	-103
About Z_{SM}	45	0
GYRO DRIFT (meru)*		
NBDX	10.1	0
NBDY	0	-3.75
NBDZ	2.8	0

* Gyro drift was assumed to start at ignition.

P8-11

Effect of Instrument Errors on LM Insertion Orbit
Apollo 15

Instrument Error	Apolune Error (ft)	Perilune Error (ft)	Crossrange Error (ft)	Inclination Error (deg)
PIPA Bias (cm/s^2)				
X	Graph A	Graph A	0	0
Y	0	0	-2,915	0.026
Z	Graph B	Graph B	0	0
IMU Misalignment (arc-seconds)				
X (ϕ_X)	0	0	-4.8	4.2×10^{-5}
Y (ϕ_Y)	Graph C	Graph C	0	0
Z (ϕ_Z)	0	0	2.16	-2.0×10^{-5}
Gyro Drift (meru)				
NBDX	0	0	-12.2	1×10^{-4}
NBDY	Graph D	Graph D	0	0
NBDZ	0	0	-3.1	3.0×10^{-5}

Nominal Values

Apolune 45.6 nmi

Perilune 9 nmi

Inclination 131 deg

LM INSERTION ORBIT APOLUNE AND PERILUNE ERRORS

APOLLO 15

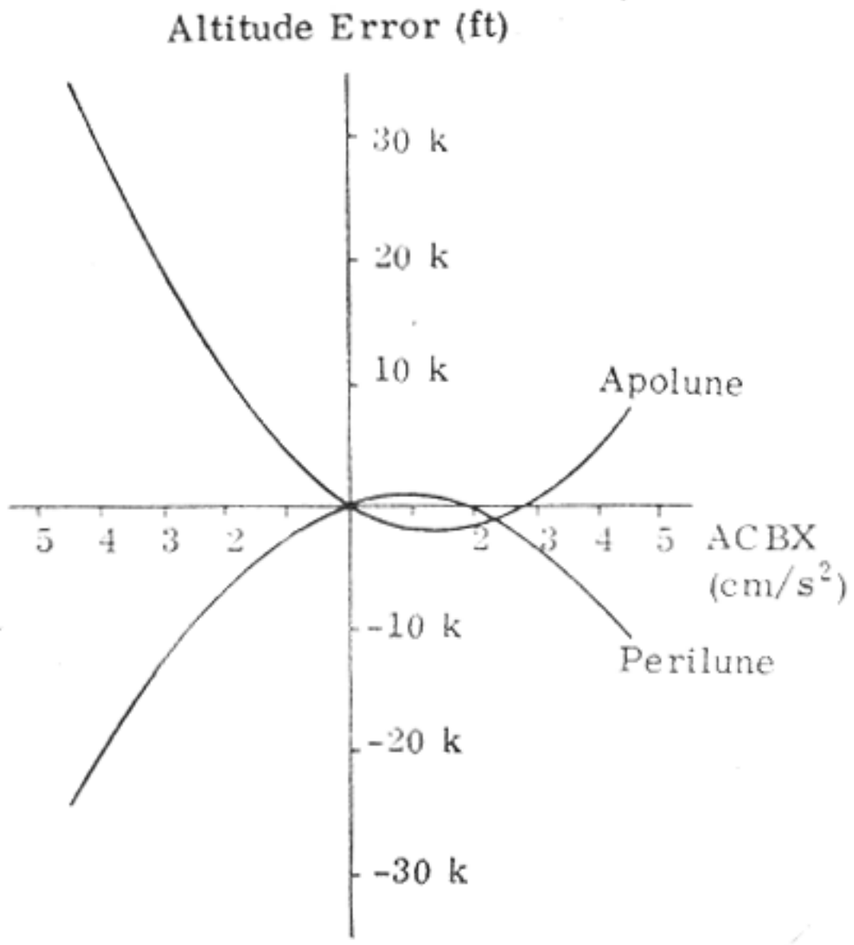

Graph A

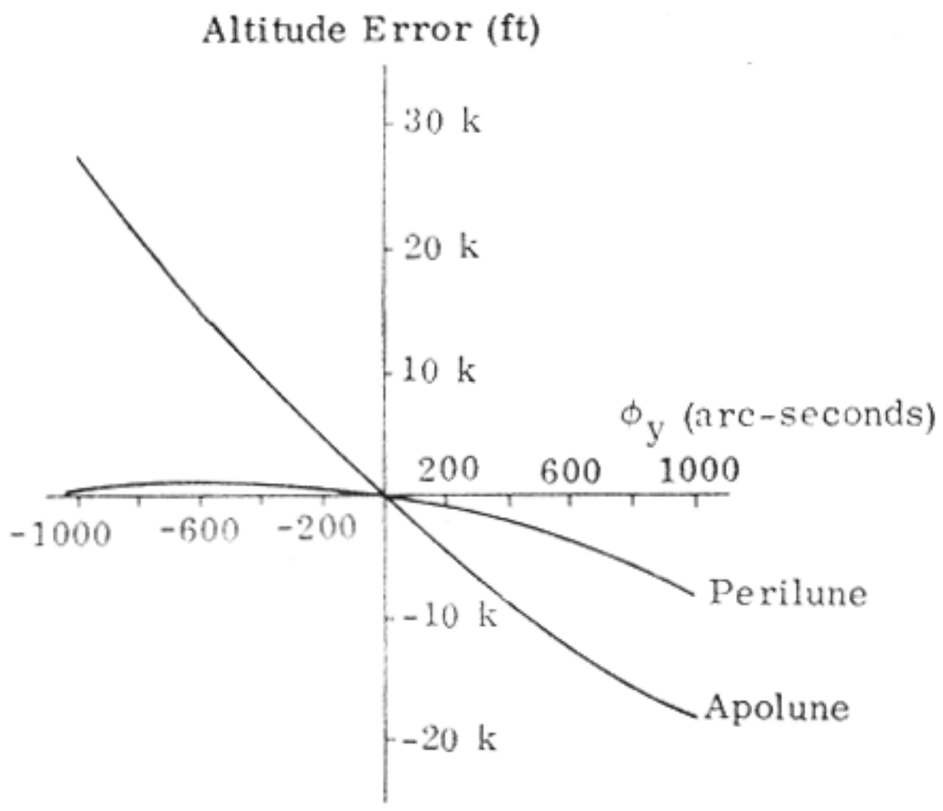

Graph C

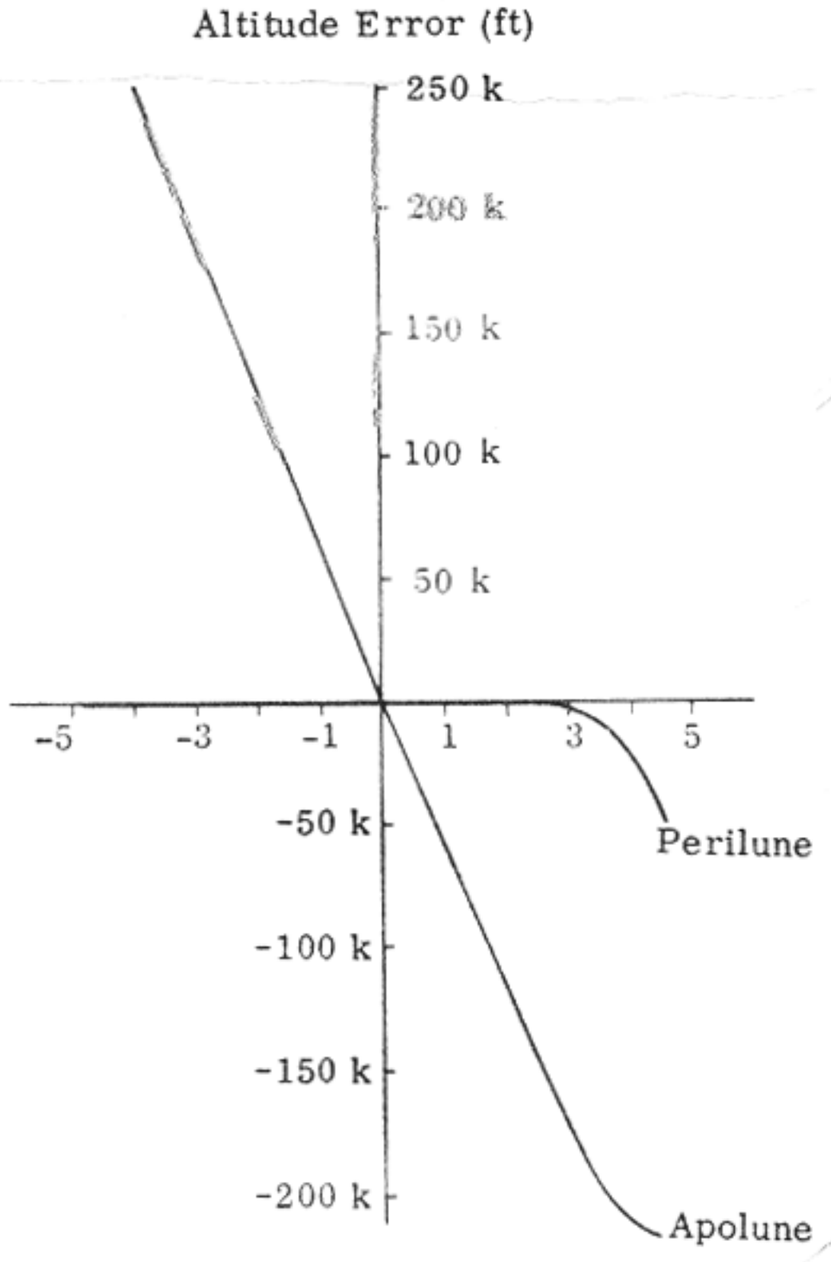

Graph B

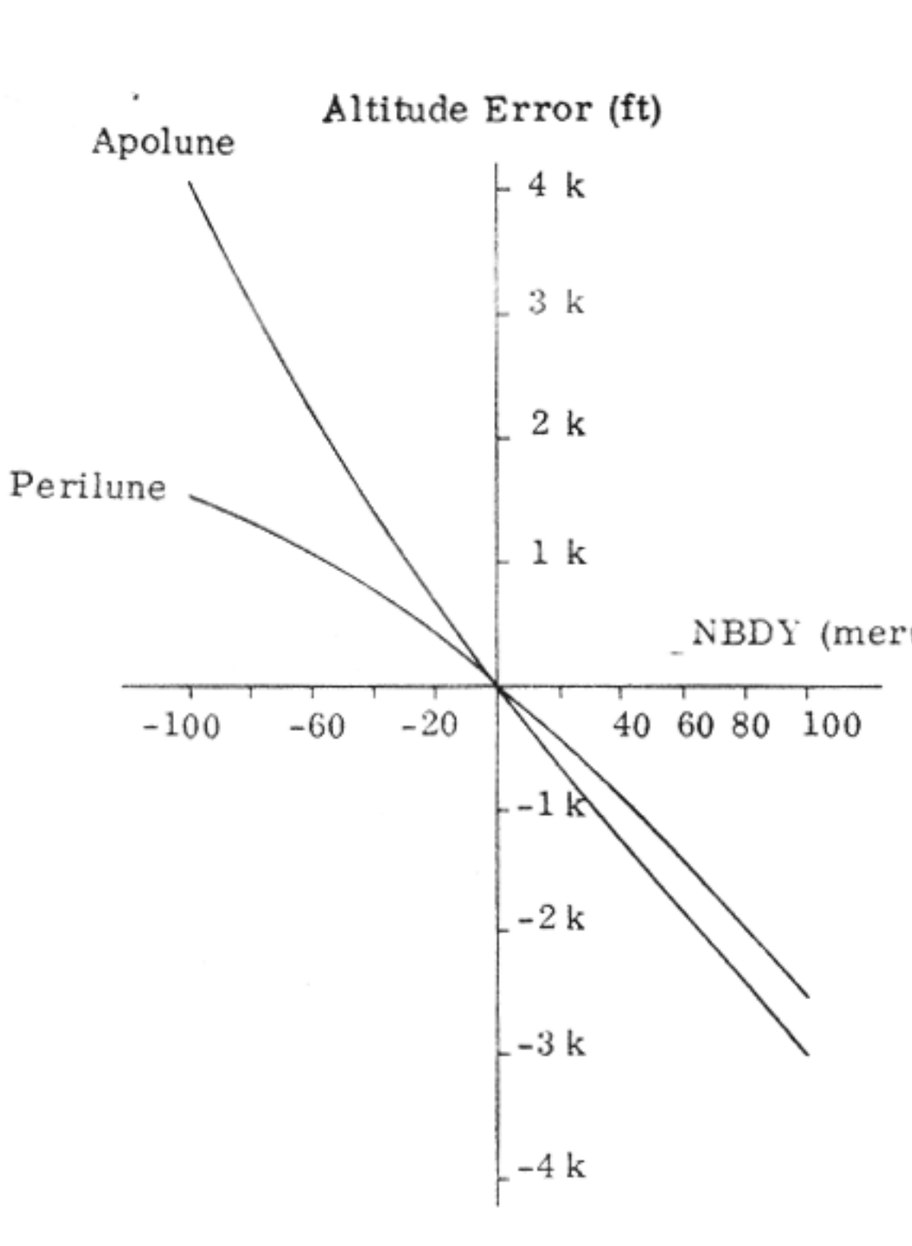

Graph D

ERRORS AT THE ENTRY INTERFACE (400,000 FT. ALT.)
DUE TO VELOCITY ERRORS DURING TRANSEARTH COAST

DIRECTION OF VELOCITY ERROR	ERROR IN VACUUM PERIGEE (nmi/ft/s)	ERROR IN TIME OF ARRIVAL (s/ft/s)	ERROR IN VELOCITY AT EI (ft/s/ft/s)	ERROR IN FLIGHT PATH ANGLE AT EI (degrees/ft/s)
ERROR EXISTING AT TEI CUTOFF (223:46:06.6 GET)				
Along $\underline{V}^*$	-13.70	-42.3	0.80	-0.95
Along $\underline{R}^* \times \underline{V}^*$	3.20	4.6	-0.03	0.22
Along $\underline{V}^* \times (\underline{R}^* \times \underline{V}^*)$	-0.12	27.0	0.09	-0.01
ERROR EXISTING AT MCC-5 (TEI + 17 hours) (240:46:06.6 GET)				
Along $\underline{V}$	2.05	-24.1	-0.31	0.13
Along $\underline{R} \times \underline{V}$	1.21	3.4	-0.12	0.08
Along $\underline{V} \times (\underline{R} \times \underline{V})$	9.49	32.8	-0.33	0.65
ERROR EXISTING AT MCC-6 (EI - 22 hours) (272:58:20 GET)				
Along $\underline{V}$	1.34	-5.2	0.09	0.09
Along $\underline{R} \times \underline{V}$	0.03	0.05	-0.08	0
Along $\underline{V} \times (\underline{R} \times \underline{V})$	5.73	14.50	-0.41	0.38
ERROR EXISTING AT MCC-7 (EI - 3 hours) (291:58:20 GET)				
Along $\underline{V}$	0.52	0.3	0.33	0.03
Along $\underline{R} \times \underline{V}$	0	0	0	0
Along $\underline{V} \times (\underline{R} \times \underline{V})$	1.47	2.6	0.09	0.10

* $\underline{R}$ and $\underline{V}$ are with respect to moon centered inertial system

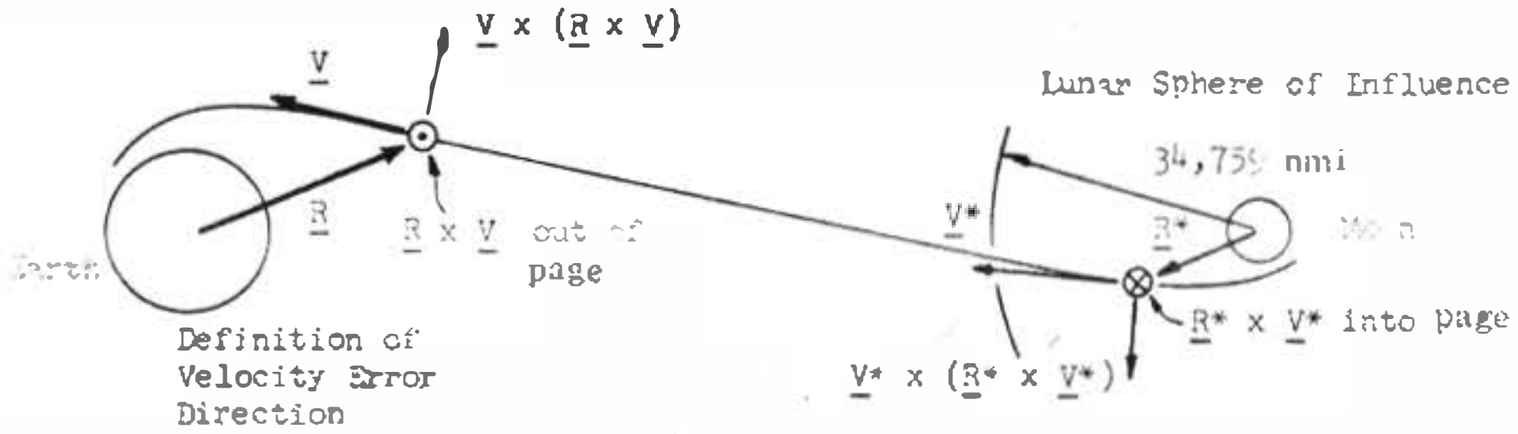

TYPICAL LUNAR RETURN ENTRY POSITION ERROR SENSITIVITIES AT GUIDANCE TERMINATION

ERROR SOURCE (ϵ)		NOMINAL 1,250 NMI ENTRY	
		Downrange Error (nmi/ϵ)	Crossrange Error (nmi/ϵ)
GYRO BIAS DRIFT (meru)	NBDX	0.0	-0.17
	NBDY	-0.15	0.0
	NBDZ	0.0	-0.43
ACCELEROMETER BIAS (cm/sec^2)	ACBX	-4.72	0.0
	ACBY	0.0	4.78
	ACBZ	-1.50	0.0

NOTES:

1. Assumed accelerometer operation 15 minutes prior to EI (altitude of 400,000 feet).
2. Assumed IMU drift from 1.5 hours prior to EI.
3. Assumed IMU orientation such that at EI:

$$\bar{Z}_{SM} = -\text{Unit}\ (\bar{R})$$
$$\bar{Y}_{SM} = -\text{Unit}\ (\bar{R} \times \bar{V})$$
$$\bar{X}_{SM} = \bar{Y}_{SM} \times \bar{Z}_{SM}$$

4. Crossrange-downrange definition:

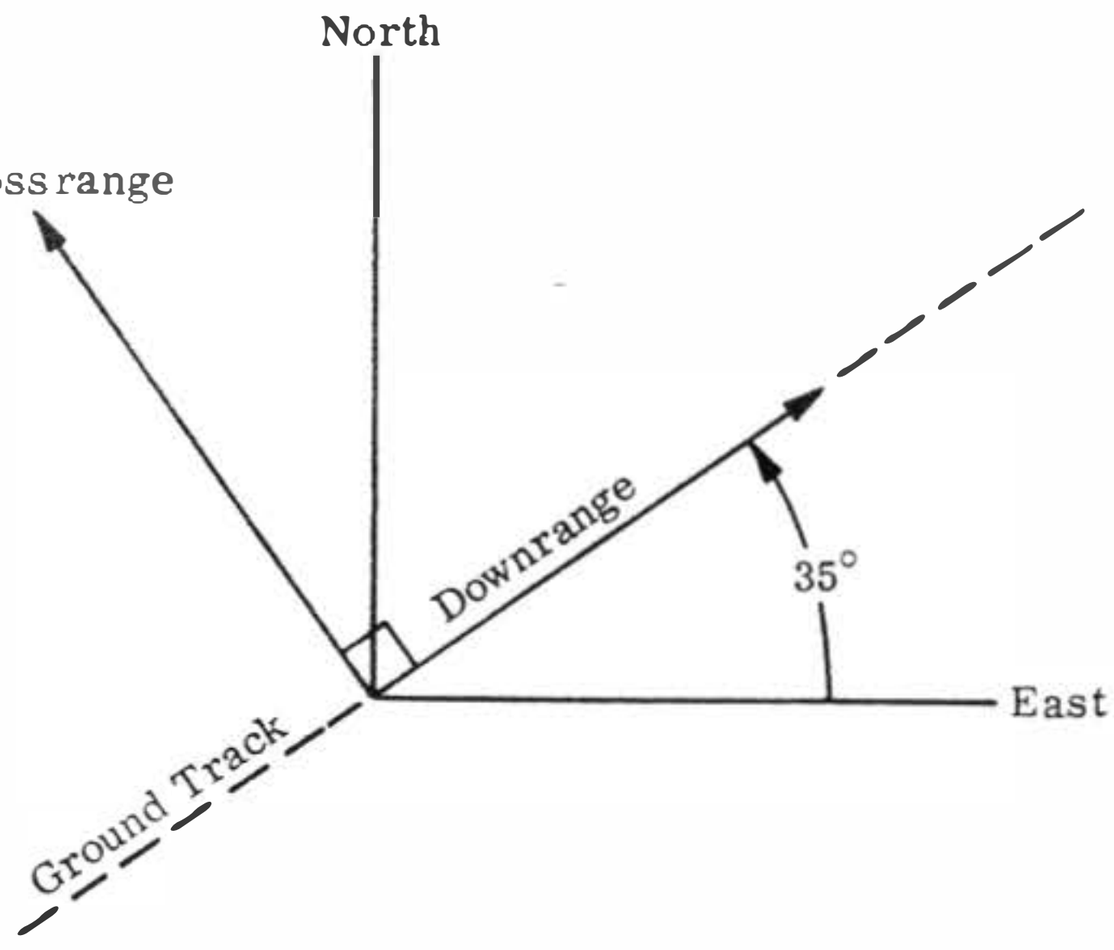

Nominal 1,250 Nautical Miles Entry

SCIENCE

NAVIGATION
CSM DIGITAL AUTOPILOT
LM DIGITAL AUTOPILOT
LUNAR LANDING
ORBITS

COASTING FLIGHT NAVIGATION

The purpose of Coasting Flight Navigation is to estimate spacecraft position and velocity. The estimates are computed using orbital mechanics and navigation sightings to improve the accuracy of the orbital mechanics. The navigation sightings are incorporated into the position and velocity estimates using a modified Kalman filter which is a recursive optimal estimator that is characterized by the following computational procedure.

1. Extrapolate the state vector ahead to time t_n, using the best estimate of the state at time t_{n-1}.

$$\underline{\hat{X}}'_n = [\Phi_{n-1}]\,\underline{\hat{X}}_{n-1}$$

2. Extrapolate the error covariance matrix in a similar manner.

$$[E'_n] = [\Phi_{n-1}]\,[E_{n-1}]\,[\Phi_{n-1}]^T + [U_{n-1}] \quad (U_{n-1} = \text{process noise})$$

3. Compute the optimal gain matrix.

$$[K^*_n] = [E'_n]\,[H_n]^T\,[H_n E'_n H_n^T + V_n]^{-1} \quad (V_n = \text{measurement noise})$$

4. Calculate a measurement vector for time t_n.

$$\underline{\hat{Y}}'_n = [H_n]\,\underline{\hat{X}}'_n$$

5. Update the estimate of the state vector, using the extrapolated state $\underline{\hat{X}}'_n$, the optimal gain $[K^*_n]$, the extrapolated measurement $\underline{\hat{Y}}'_n$, and the actual measurement at time t_n, $\underline{Y}_n$.

$$\underline{\hat{X}}_n = \underline{\hat{X}}'_n + [K^*_n]\,(\underline{Y}_n - \underline{\hat{Y}}'_n)$$

6. Update the error covariance matrix in a similar manner.

$$[E_n] = [E'_n] - [K^*_n]\,[H_n]\,[E'_n]$$

This procedure is illustrated by the following block diagram.

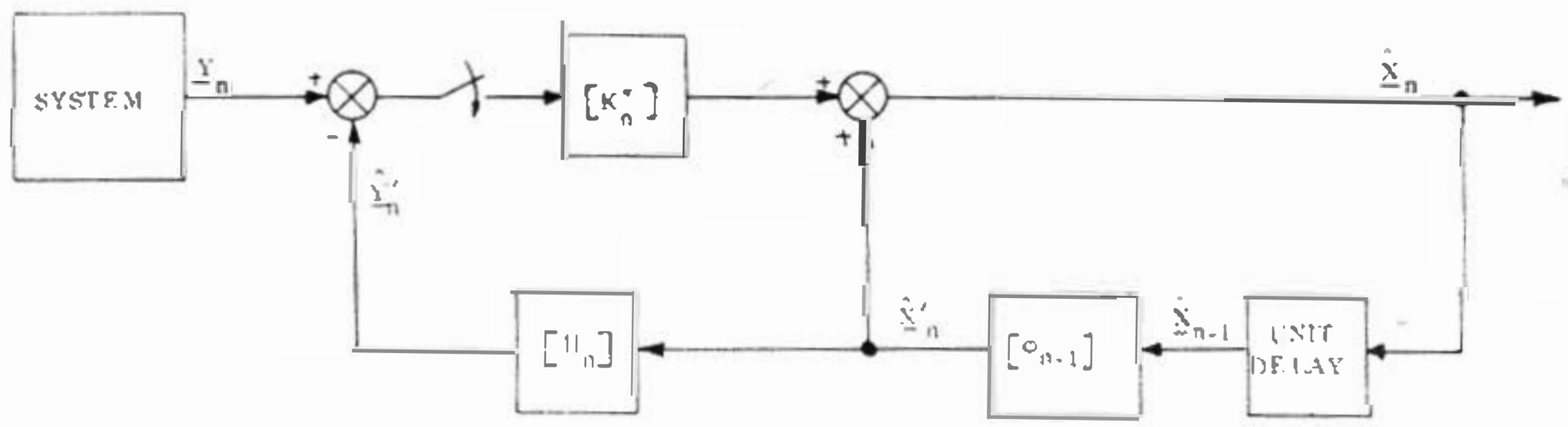

Basic Recursive Procedure of Kalman Filtering

MODIFICATIONS TO THE BASIC KALMAN FILTER

The basic Kalman filter outlined on the previous page was modified for use in Coasting Flight Navigation in the following aspects.

1. Instead of extrapolating the error covariance matrix, [E], the square root of the error covariance matrix is extrapolated. This insures that the covariance matrix will always be positive semi-definite and avoids the usual difficulties that occur when computation techniques yield a negative error covariance matrix. The square root of the error covariance matrix is called the error transition matrix [W].
2. The state vector and error transition matrix are extrapolated by integrating their respective second order differential equations via the coasting integration routine. This is done in lieu of the state transition approach and eliminates the necessity of computing a new time varying transition matrix for each measurement interval.
3. The update of the state vector after each measurement must first be displayed and approved by the astronaut before it is incorporated into the state vector. This eliminates the possibility of an erroneous update due to an improper mark.
4. Only one measurement is incorporated at a time. This reduces the dimension of the filter equations and changes the matrix inversion in the optimal gain equation to a scalar division.

STATE VECTOR DEFINITION

The state vector for coasting flight navigation is defined as the deviation of the spacecraft position and velocity from a reference conic.

$$\text{State Vector} = \underline{x}(t) = \begin{bmatrix} \delta\underline{r} \\ \delta\underline{v} \end{bmatrix} = \begin{bmatrix} \delta r_x \\ \delta r_y \\ \delta r_z \\ \delta v_x \\ \delta v_y \\ \delta v_z \end{bmatrix} = \begin{bmatrix} \text{Deviations from conic position} \\ \\ \\ \text{Deviations from conic velocity} \end{bmatrix}$$

Deviations from the reference conic are assumed to be Gaussian distributed with a known mean and variance. The mean is estimated via the precision integration routines or obtained from MSFN. The variance is given by the error covariance matrix, which is precomputed and entered via erasable data load.

CORRELATION BETWEEN BASIC KALMAN FILTER TERMINOLOGY AND COASTING FLIGHT TERMINOLOGY

The following table lists the correlation between basic Kalman filter terminology as used on the previou page and Coasting Flight Navigation terminology to be used on the following pages.

CELESTIAL NAVIGATION TERMINOLOGY	KALMAN FILTER TERMINOLOGY	CORRELATION
$\underline{b}$ = geometry vector of dimension "D"	$[H]$ = measurement matrix	$\underline{b}^T \Rightarrow [H]$
$\underline{\omega}$ = weighting vector of dimension "D"	$[K_n^*]$ = optimal gain matrix	$\underline{\omega} \Rightarrow [K_n^*]$
$[W]$ = error transition matrix of dimension "D x D"	$[E]$ = error covariance matrix	$[E] \Rightarrow [WW^T]$
$\underline{x}$ = state vector	$\underline{x}$ = state vector	$\underline{x} \supset \underline{x}$
$\bar{\alpha}^2$ = a priori measurement error variance (scalar)	$[V]$ = covariance of the measurement noise	$\bar{\alpha}^2 \Rightarrow [V]$
δQ = measurement deviation (scalar)	$(\hat{\underline{Y}}_n' - \underline{Y}_n)$ = measurement residual	$\delta Q \Rightarrow (\hat{Q}_n' - \underline{Y}_n)$

COASTING INTEGRATION ROUTINE

The Coasting Integration routine is a standardized subroutine used to integrate spacecraft state vectors to specific times. It is used during each of the three navigation programs (P20-Orbital Navigation, P22-Rendezvous Navigation, and P23 Cislunar Midcourse Navigation) to extrapolate the state vector and error transition matrix ahead to the measurement time by direct numerical integration of their differential equations.

STATE VECTOR EQUATIONS

The basic equation describing spacecraft motion is

$$\begin{bmatrix} \dot{\underline{r}} \\ \dot{\underline{v}} \end{bmatrix} = \begin{bmatrix} 0 & I \\ -\frac{\mu}{|\underline{r}|^3} & 0 \end{bmatrix} \begin{bmatrix} \underline{r} \\ \underline{v} \end{bmatrix} + \begin{bmatrix} \underline{0} \\ \underline{a}_d \end{bmatrix} \tag{1}$$

where

$\underline{r}$ = spacecraft position vector

$\underline{v}$ = spacecraft velocity vector

$\underline{a}_d$ = disturbance acceleration vector

μ = primary planet gravitation constant

When the disturbance, $\underline{a}_d$, is small, then Encke's method of differential accelerations can be used to solve Equation 1. Encke's method divides spacecraft motion into two parts: (1) conic or osculating orbital motion which would result if $\underline{a}_d = \underline{0}$ and (2) deviation from conic motion as a result of $\underline{a}_d \neq \underline{0}$.

$$\underline{r} = \underline{r}_{conic} + \underline{\delta r} \tag{2}$$

$$\underline{v} = \underline{v}_{conic} + \underline{\delta v} \tag{3}$$

where

$\underline{r}$, $\underline{v}$ = spacecraft position and velocity

$\underline{r}_{conic}$, $\underline{v}_{conic}$ = conic position and velocity

$\underline{\delta r}$, $\underline{\delta v}$ = deviations from conic position and velocity

Substitution of Equations 2 and 3 into the basic equation of motion, Equation 1, yields differential equations for the conic position and velocity and the deviation from conic position and velocity.

Conic Motion Equation

$$\begin{bmatrix} \dot{\underline{r}}_{conic} \\ \dot{\underline{v}}_{conic} \end{bmatrix} = \begin{bmatrix} 0 & I \\ -\frac{\mu}{|r|_{conic}^3} & 0 \end{bmatrix} \begin{bmatrix} \underline{r}_{conic} \\ \underline{v}_{conic} \end{bmatrix} \tag{4}$$

Deviation Equation

$$\begin{bmatrix} \underline{\delta \dot{r}} \\ \underline{\delta \dot{v}} \end{bmatrix} = \begin{bmatrix} 0 & I \\ G & 0 \end{bmatrix} \begin{bmatrix} \underline{\delta r} \\ \underline{\delta v} \end{bmatrix} + \begin{bmatrix} \underline{0} \\ \underline{a}_d \end{bmatrix} \quad \text{Subject to initial conditions} \quad \left\{ \begin{array}{l} \underline{\delta r}(t_0) = \underline{0} \\ \underline{\delta v}(t_0) = \underline{0} \end{array} \right\} \tag{5}$$

where

$$G = \frac{\mu}{r_{conic}^5} \left[3\, \underline{r}_{conic}\, \underline{r}_{conic}^T - r_{conic}^2 [I] \right]$$

The conic motion equation is solved explicitly using Kepler's subroutine. The deviation equation is solved by by direct numerical integration and is called the "state equation"; it can be written in the form

$$\dot{\underline{x}} = [F]\, \underline{x} + \underline{C} \tag{6}$$

ERROR TRANSITION MATRIX EQUATIONS

The accuracy of the state vector estimation process is characterized by the error covariance matrix which expresses the mean squared error of each state vector element in matrix form

state vector estimation error

$$\underline{e} = \hat{\underline{x}} - \underline{x} \tag{7}$$

where

$\underline{e}$ = estimation error

$\hat{\underline{x}}$ = estimated state vector

$\underline{x}$ = actual state vector

error covariance matrix

$$[E] = \langle \underline{e}\, \underline{e}^T \rangle \tag{8}$$

where

[E] = error covariance matrix

$\langle\ \rangle$ = denotes "expected value"

If the state vector is described by Equation 6, then the error covariance matrix is described by

$$\dot{E} = FE + EF^T \quad \text{(neglecting process noise)} \tag{9}$$

and the error transition matrix is described by

$$\dot{W} = FW \tag{10}$$

where

$$[WW^T] = [E]$$

Equation 10 is the differential equation describing the error transition matrix and is solved by direct numerical integration.

SUMMARY

TIME DOMAIN EQUATIONS	STATE TRANSITION EXTRAPOLATION	NUMERCIAL INTEGRATION EXTRAPOLATION
$\dot{\underline{x}} = F\underline{x} + \underline{C}$	$\hat{\underline{x}}' = [\phi]\hat{\underline{x}}$	$\hat{\underline{x}}' = \hat{\underline{x}}(t_n) + \int_{t_n}^{t_{n+1}} F\hat{\underline{x}}\, dt$
$\dot{E} = FE - EF^T$	$E' = \phi E \phi^T$	
$\dot{W} = FW$		$W' = W(t_n) + \int_{t_n}^{t_{n+1}} FW\, dt$

MEASUREMENT INCORPORATION ROUTINE

The Measurement Incorporation routine, like the Coasting Integration routine, is used by all three navigation programs. Its purpose is to compute a state vector update based on the information obtained from the navigation sighting. The procedure for updating the state vector can be divided into three parts.

1. Compute a geometry vector, $\underline{b}$, based on the state vector and type of navigation sighting that is being made.
2. Compute a state vector update.
3. Update the state vector and error transition matrix if the astronaut approves of the incorporation.

GEOMETRY VECTOR

The geometry vector relates the measurement, $\hat{Y}'_n$, to the state vector, $\hat{\underline{x}}'_n$, according to Equation 11

$$\hat{Y}'_n = \underline{b}^T \hat{\underline{x}}'_n \tag{11}$$

where

$\hat{Y}'_n$ = the expected measurement (a scalar)

$\underline{b}$ = geometry vector (n x 1 column vector)

$\hat{\underline{x}}'_n$ = state vector extrapolated to the measurement time via the Coasting Integration routine.

The state vector for coasting flight navigation is a deviation from a reference (osculating) orbit and the measurement variable can also be thought of as a deviation from a reference or nominal. Thus the measurement vector can be determined by taking the derivative of the measurement with respect to the state vector. This can be illustrated for the case of cislunar midcourse navigation, where the navigation sighting is the angle between a known near planetary landmark and a star as shown below

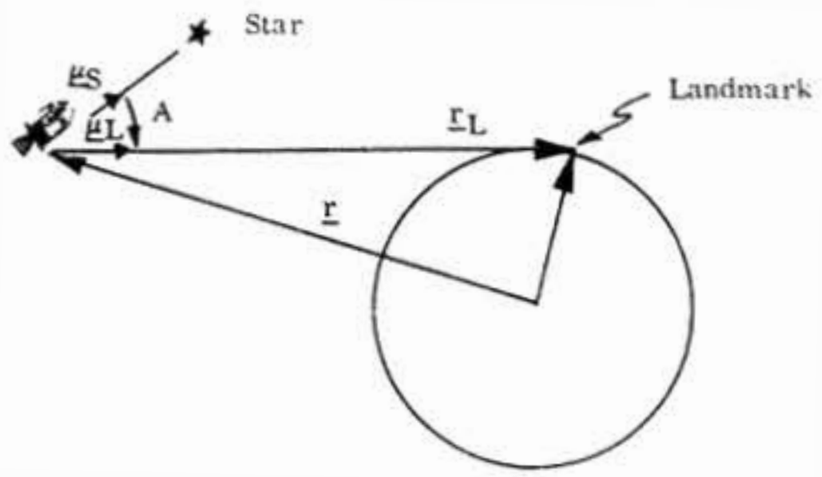

$$r_L \cos A \triangleq \underline{\mu}_S^T \underline{r}_L$$

Taking partials

$$\delta r_L \cos A - r_L \sin A\, \delta A = \underline{\mu}_S^T \delta \underline{r}_L$$

$$\delta A = (\delta r_L \cos A - \underline{\mu}_S^T \delta \underline{r}_L)/r_L \sin A$$

By definition

$$\delta r_L\, r_L \text{ a scalar} = \underline{r}_L^T \delta \underline{r}_L$$

therefore

$$\delta r_L = \frac{\underline{r}_L^T}{r_L} \delta \underline{r}_L = \underline{\mu}_L^T \delta \underline{r}_L$$

and

$$\delta A = \frac{\underline{\mu}_L^T \delta \underline{r}_L \cos A - \underline{\mu}_S^T \delta \underline{r}_L}{r_L \sin A}$$

$$\delta A = \frac{\left(\underline{\mu}_L^T \cos A - \underline{\mu}_S^T\right)\delta \underline{r}_L}{r_L \sin A} = \frac{\left(\underline{\mu}_L^T \cos A - \underline{\mu}_S^T\right)\left(-\delta \underline{r}'\right)}{r_L \sin A}$$

$$\underline{b} = \frac{\underline{\mu}_S - \underline{\mu}_L \cos A}{r_L \sin A} \quad \frac{1}{r_L} \text{Unit}\left(\underline{\mu}_S - \underline{\mu}_L\, (\underline{\mu}_S \cdot \underline{\mu}_L)\right)$$

The geometry vector can also be determined by geometrical relationship between the state vector and the type of measurement. Since $\underline{b}$ is different for each navigation program, its derivations are presented on the following pages which describe the individual navigation programs.

COMPUTE THE STATE VECTOR UPDATE

The computation of the state vector update encompasses Steps 3, 4, and 5 of the basic Kalman filtering procedure.

1. Compute the optimal gain matrix

$$[K_n^*] = [E' H^T] [HE' H^T + V]^{-1} \tag{12}$$

or, in the terminology of coasting flight navigation,

$$\underline{\omega} = [W'W'^T \underline{b}] [\underline{b}^T W'W'^T \underline{b} + \bar{\alpha}^2]$$

$$= \frac{W' \underline{z}}{(z^2 + \bar{\alpha}^2)} \tag{13}$$

where

$\underline{\omega}$ = optimal gain vector

W' = error transition matrix extrapolated forward by the Coasting Integration routine

$\underline{z}$ = $W'^T \underline{b}$ (a vector used to simplify computations)

z^2 = $\underline{z}^T \underline{z} = \underline{b}^T W'W'^T \underline{b}$ (analogous to $HE' H^T$)

$\bar{\alpha}^2$ = measurement noise covariance (an erasable data load or fixed memory constant which depends on which navigation program is in use)

$(z^2 + \bar{\alpha}^2)$ is a scalar and eliminates the necessity of matrix inversion

2. Compute the expected measurement based on the extrapolated state vector.

$$\hat{Y}'_n = \underline{b}^T \underline{x}'_n \tag{14}$$

where

$\hat{Y}'_n$ = expected measurement from current navigation sighting

$\underline{b}$ = geometry vector

$\underline{\tilde{x}}'_n$ = extrapolated state vector

3. Compute the state vector update

$$\underline{\delta x} = \underline{\omega}\, \delta Q = \underline{\omega} (Y_n - \hat{Y}'_n) \tag{15}$$

where

$\underline{\delta x}$ = state vector update

$\underline{\omega}$ = optimal weighting vector

δQ = measurement residual

Y_n = information from current navigation sighting

$\hat{Y}'_n$ = expected measurement

UPDATE THE STATE VECTOR AND ERROR TRANSITION MATRIX

Before the state vector update, $\underline{\delta x}$, is incorporated into the state vector, it is displayed to the astronaut for his approval. This is to prevent erroneous tracking data, such as improperly identified stars or landmarks, from being used to update the state. When astronaut approval has been issued, the state vector and error transition matrix are updated as follows:

UPDATE THE STATE VECTOR

$$\underline{\hat{x}}_n = \underline{\tilde{x}}'_n + \underline{\delta x} \tag{16}$$

where

$\underline{\hat{x}}_n$ = best estimate of state at time t_n

$\underline{\tilde{x}}'_n$ = state vector extrapolated ahead from time t_{n-1} to t_n

$\underline{\delta x}$ = state vector update

UPDATE THE ERROR TRANSITION MATRIX

The equation governing updating of the error covariance matrix is given in Step 6 of the basic Kalman filtering procedure.

$$[E_n] = [E_n'] - [K_n^*] [H_n] [E_n']$$

This can be rewritten in terms of coasting flight navigation terminology

$$[WW^T] = [W'W'^T] - \underline{\omega}\,\underline{b}^T [W'W'^T] \tag{18}$$

Equation 18 can be separated to obtain an equation for updating only the error transition matrix $[W]$ instead of the product $[WW^T]$.

$$[W] = [W'] - \frac{\underline{\omega}\,\underline{z}^T}{1 + \sqrt{\dfrac{\bar{\alpha}^2}{z^2 + \bar{\alpha}^2}}} \tag{19}$$

where

$[W]$ = updated error transition matrix

$[W']$ = extrapolated error transition matrix

$\underline{\omega}$ = optimal gain vector

$\underline{z} = W'^T \underline{b}$

$z^2 = \underline{z}^T \underline{z}$

$\bar{\alpha}^2$ = measurement noise covariance

SUMMARY

The total spacecraft position and velocity is kept current through extrapolation, updating, and rectification. Rectification is a process used to redefine the reference trajectory by adding the deviations, $\underline{\delta r}$ and $\underline{\delta v}$, to the osculating elements, $\underline{r}$ conic and $\underline{v}$ conic, thereby redefining the osculating orbit and reducing the deviation state vector to zero.

$$\begin{bmatrix} \underline{r}\ \text{conic} \\ \underline{v}\ \text{conic} \end{bmatrix} = \begin{bmatrix} \underline{r}\ \text{conic} \\ \underline{v}\ \text{conic} \end{bmatrix} + \begin{bmatrix} \underline{\delta r} \\ \underline{\delta v} \end{bmatrix} \tag{20}$$

$$\begin{bmatrix} \underline{\delta r} \\ \underline{\delta v} \end{bmatrix} = \begin{bmatrix} \underline{0} \\ \underline{0} \end{bmatrix} \tag{21}$$

This process is used to preserve the efficiency of Encke's method and is illustrated below.

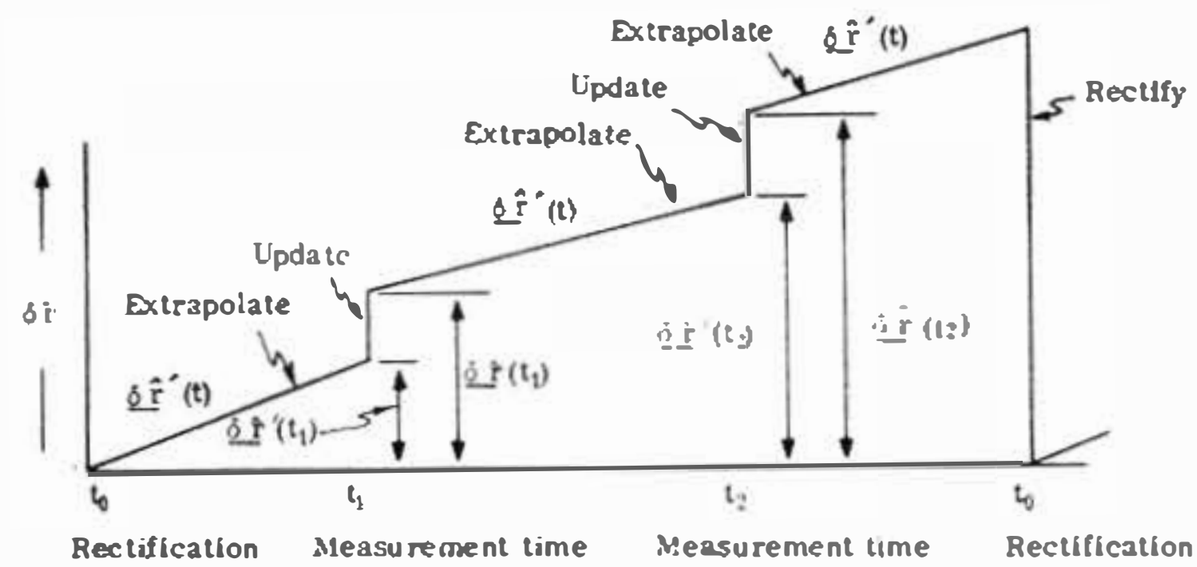

INITIALIZING THE COASTING FLIGHT NAVIGATION PROGRAMS

Each of the navigation programs is initialized prior to use by specifying the measurement variance, $\bar{\sigma}^2$, and the initial error transition matrix, $[W]$. The measurement variance gives a confidence level for the navigation instruments by specifying the variance of all the error sources associated with the instrument. The W matrix gives a confidence level for the initial estimate of the state vector by specifying the mean squared error in the position and velocity estimates. $[W]$ is initialized as a diagonal matrix which says that initially the position and velocity errors are independent.

MEASUREMENT VARIANCE	INITIAL "W" MATRIX
CISLUNAR MIDCOURSE NAVIGATION ROUTINE P-23	
$\bar{\sigma}^2 = Var_{Trun} + Var_L/r_{CL}^2$ $= (0.05\ mr)^2 + \frac{1\ nmi^2}{r_{CL}^2}$	$[W] = \begin{bmatrix} w^*_{mr}I & 0 \\ 0 & w^*_{mv}I \end{bmatrix}$
ORBITAL NAVIGATION ROUTINE P-22	
$\bar{\sigma}^2 = Var_{SXT} + Var_{IMU}$ $= (1\ mr)^2 + (0.2\ mr)^2$	$[W] = \begin{bmatrix} w^*_{r}I & 0 & 0 \\ 0 & w^*_{v}I & 0 \\ 0 & 0 & w^*_{t}I \end{bmatrix}$
RENDEZVOUS NAVIGATION PROGRAM (LEM) P-20	
RANGE MEASUREMENT $\bar{\sigma}^2 = Max\left\{ Var^*_{R_\bullet}, \frac{Var^*_{R\,min}}{r_{CL}^2} \right\}$ RANGE RATE MEASUREMENT $\bar{\sigma}^2 = Max\left\{ \dot{r}^2\, Var^*_{V_\bullet}, Var^*_{V\,min} \right\}$ SHAFT ANGLE MEASUREMENT $\bar{\sigma}^2 = Var^*_{\beta} + Var_{IMU} = Var^*_{\beta} + (0.2\ mr)^2$ TRUNNION ANGLE MEASUREMENT $\bar{\sigma}^2 = Var^*_{\theta} + Var_{IMU} = Var^*_{\theta} + (0.2\ mr)^2$	FOR RENDEZVOUS $[W] = \begin{bmatrix} w^*_{rr}I & 0 & 0 & 0 \\ 0 & w^*_{rv}I & 0 & 0 \\ 0 & 0 & w^*_{\beta} & 0 \\ 0 & 0 & 0 & w^*_{\theta} \end{bmatrix}$ FOR LUNAR SURFACE NAVIGATION $[W] = \begin{bmatrix} w^*_{lr}I & 0 \\ 0 & w^*_{lv}I \end{bmatrix}$
RENDEZVOUS NAVIGATION PROGRAM (CSM) P-20	
OPTICAL TRACKING $\bar{\sigma}^2 = Var_{SXT} + Var_{IMU} + \frac{Var^*_{INT}}{r_{CL}^2}$ $= (0.2\ mr)^2 + (0.2\ mr)^2 + \frac{Var^*_{INT}}{r_{CL}^2}$ VHF RANGING $\bar{\sigma}^2 = Max\left\{ Var^*_{R_\bullet}, \frac{Var^*_{R\,min}}{r_{CL}^2} \right\}$ ALTERNATE LOS $\bar{\sigma}^2 = Var^*_{ALT} + Var_{IMU}$ $= Var^*_{ALT} + (0.2\ mr)^2$	$[W] = \begin{bmatrix} w^*_{rr}I & 0 \\ 0 & w^*_{rv}I \end{bmatrix}$

* These values are stored in erasable memory.

ERASABLE DATA LOAD PARAMETERS

PARAMETER ($\bar{\sigma}^2$)	DATA LOAD MNEMONIC	VALUE	PARAMETER $\lvert W \rvert$	DATA LOAD MNEMONIC	VALUE
Var_R (LM)	RANGEVAR	1.1111×10^{-5}	W_{mr} (CSM)	WMIDPOS	30.000 ft
$Var_{R\ min}$ (LM)	RVARMIN	$(66\ m)^2$	W_{mv} (CSM)	WMIDVEL	30 ft/s
$Var_{\dot{R}}$ (LM)	RATEVAR	1.3777×10^{-5}	W_{or} (CSM)	WORBPOS	0.0
$Var_{\dot{R}\ min}$ (LM)	VVARMIN	$(0.017445\ m/s)^2$	W_{ov} (CSM)	WORBVEL	0.0
Var_{β} (LM)	SHAFTVAR	$(1\ mrad)^2$	W_{sr} (CSM)	S22WSUBL	10,000 m
Var_{η} (LM)	TRUNVAR	$(1\ mrad)^2$	W_{rr} (LM)	WRENDPOS	10,000 ft
Var_{INT} (CSM)	INTVAR	$(14\ m)^2$	W_{rv} (LM)	WRENDVEL	10 ft/s
Var_R (CSM)	RVAR	0.0	W_{β} (LM)	WSHAFT	15 mrad
$Var_{R\ min}$ (CSM)	RVARMIN	$(200\ ft)^2$	W_{η} (LM)	WTRUN	15 mrad
Var_{ALT} (CSM)	ALTVAR	$(3.5\ mrad)^2$	W_{sr} (LM)	WSURFPOS	0.0
			W_{sv} (LM)	WSURFVEL	0.0
			W_{rr} (CSM)	WRENDPOS	10,000 ft
			W_{rv} (CSM)	WRENDVEL	10 ft/s

CISLUNAR MIDCOURSE NAVIGATION PROGRAM

(P23)

During cislunar midcourse navigation the angle between the lines of sight to a known star and a planetary landmark is measured. This angle measurement is then used to update the state vector via the measurement incorporation routine. The geometry relating the angular measurement to the deviation state vector is given below.

STAR/LANDMARK GEOMETRY

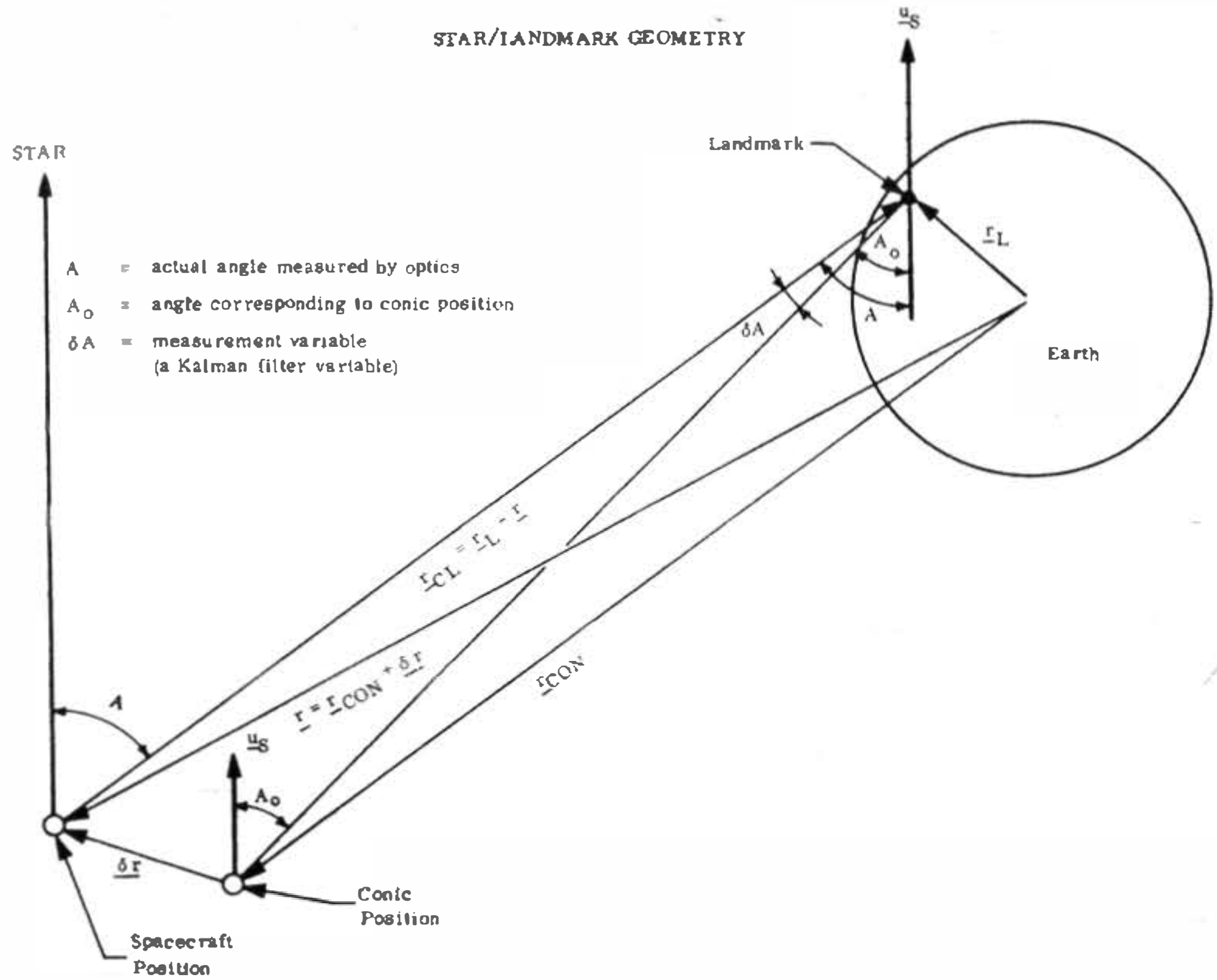

The relationship between the state vector and measurement variable can be determined by redrawing part of the preceding figure.

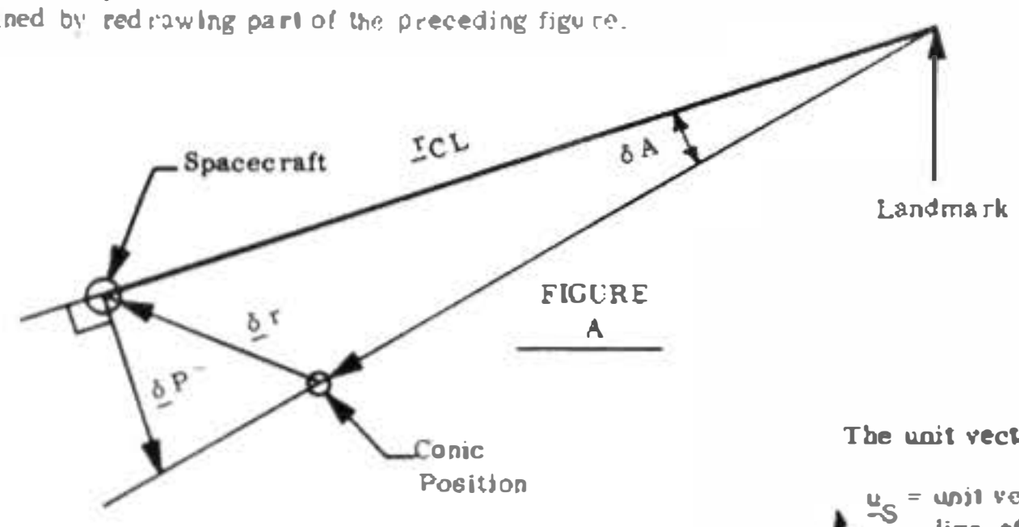

FIGURE A

$$\delta A = \frac{|\delta \underline{P}|}{|\underline{r}_{CL}|} = \frac{\underline{u}_p^T \delta\underline{r}}{|\underline{r}_{CL}|} = \frac{\underline{u}_p^T}{|\underline{r}_{CL}|} \quad \delta\underline{r} = \underline{b}^T \delta\underline{x}$$

where $\underline{u}_p$ is a unit vector prependicular to $\underline{r}_{CL}$

The unit vector, $\underline{u}_p$, can be determined from Figure A

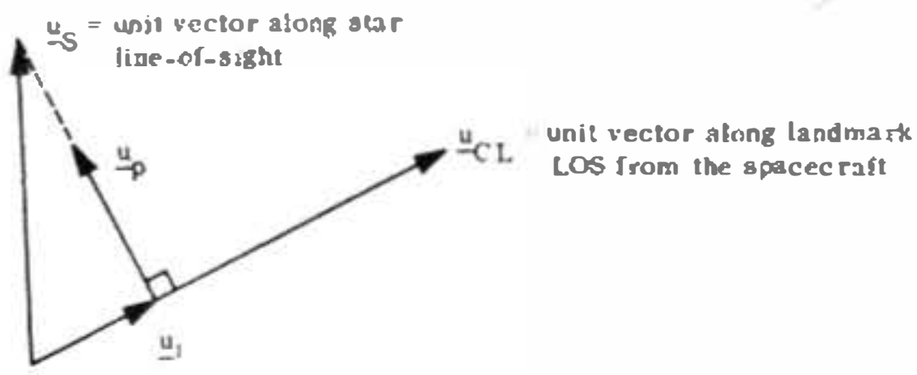

$\underline{u}_p$ = Unit $(\underline{u}_S - \underline{u}_1)$

$\underline{u}_1$ = Component of $\underline{u}_S$ along $\underline{u}_{CL} = (\underline{u}_S \cdot \underline{u}_{CL})\,\underline{u}_{CL}$

$\underline{u}_p$ = Unit $(\underline{u}_S - (\underline{u}_S \cdot \underline{u}_{CL})\,\underline{u}_{CL})$

$$\therefore \quad \underline{b} = \frac{1}{|\underline{r}_{CL}|}\left[\text{Unit}\,(\underline{u}_S - (\underline{u}_S \cdot \underline{u}_{CL})\,\underline{u}_{CL})\right]$$

SC-12

ORBITAL NAVIGATION - LANDMARK TRACKING
(P22)

During orbital navigation, the inertial line of sight from the spacecraft to a planetary landmark is measured by recording the optics shaft and trunnion angles, the IMU gimbal angles, and the time of the mark. Up to five marks are made on each landmark before the Measurement Incorporation routine is called to update the state vector.

Classical celestial mechanics says that if the angles between a planetary landmark and two different stars are measured then the line of sight from the spacecraft to the landmark can be determined, or that two star/landmark measurements are equivalent to one line-of-sight measurement. Orbital navigation uses this equivalency to incorporate the line-of-sight measurement by treating it as two star/landmark measurements. The two fictitious star/landmark measurements are then incorporated in the same manner as real star/landmark measurements in P23.

The dimension of the state vector for orbital navigation is expanded from six to nine to include the landmark position vector. If the concept of "deviation state vector" is carried over to include the landmark, then

$$\underline{x} = \begin{bmatrix} \underline{\delta r} \\ \underline{\delta v} \\ \underline{\delta r}_L \end{bmatrix}$$

where

$\underline{x}$ = orbital navigation state vector

$\underline{\delta r}$ = deviation of spacecraft position from the reference conic

$\underline{\delta v}$ = deviation of spacecraft velocity from the reference conic

$\underline{\delta r}_L$ = deviation of landmark position from the nominal

The geometry vector, $\underline{b}$ can be determined using a procedure similar to that used for P23.

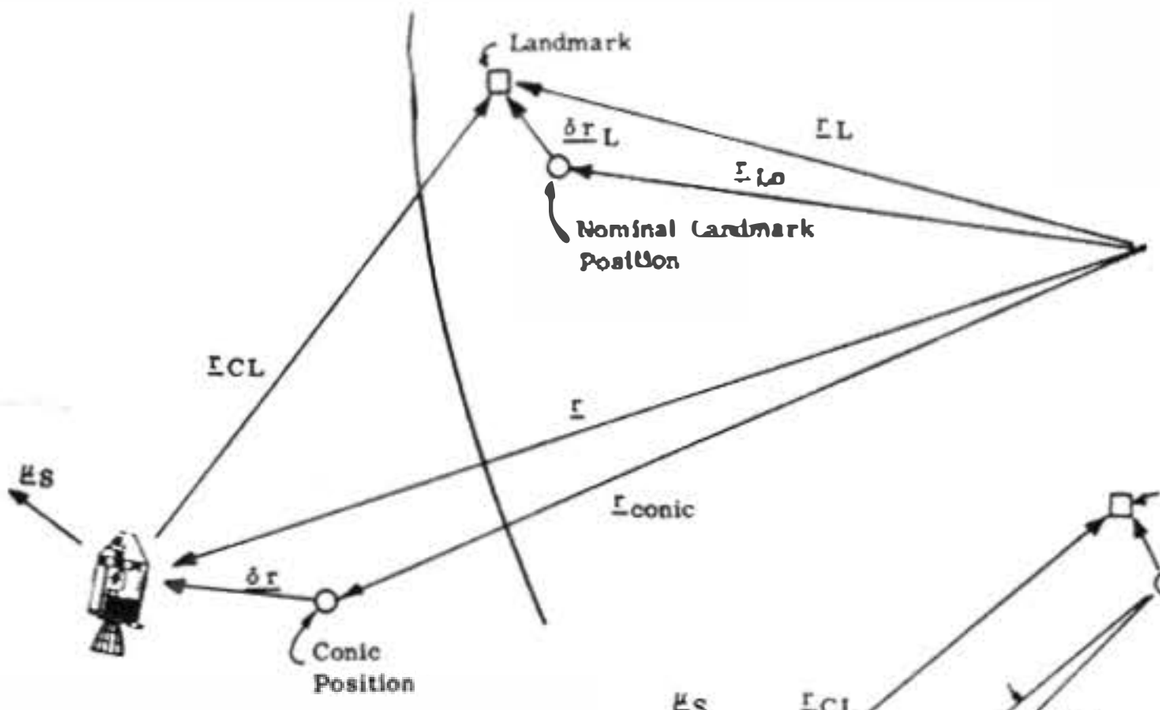

The expected line of sight is $\underline{r}_{CL}$.

The angle between the star LOS and landmark LOS is

$$A = A_o + \delta A$$

where

A = Star/landmark LOS angle

A_o = Part of angle due to conic or nominal positions

δA = Part of angle due to deviations from conic or nominal positions

the star LOS's are chosen perpendicular to $\underline{r}_{CL}$

$$\mu_{S1} = \text{Unit}\,(\mu_S' \times \underline{r}_{CL})$$

$$\mu_{S2} = \text{Unit}\,(\mu_{S1} \times \underline{r}_{CL})$$

where:

$\mu_S' = \text{Unit}\,(\underline{r}_{CL} \times \underline{r}_M)$

$\underline{r}_M$ = measured LOS

$\underline{r}_{CL}$ = expected LOS

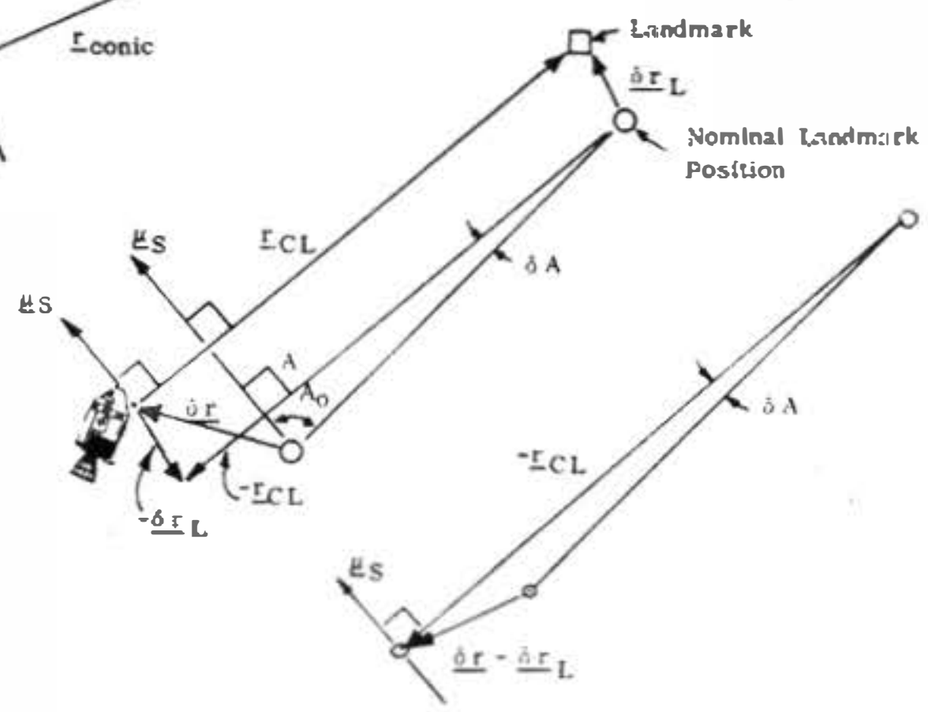

From the above figure

$$\delta A = \frac{\mu_s \cdot (\underline{\delta r} - \underline{\delta r}_L)}{|\underline{r}_{CL}|} = \frac{\mu_s^T}{|\underline{r}_{CL}|} (\underline{\delta r} - \underline{\delta r}_L)$$

$$\delta A = \underline{b}^T \underline{x} = \frac{1}{|\underline{r}_{CL}|} \begin{bmatrix} \mu_s^T & \underline{0} & -\mu_s^T \end{bmatrix} \begin{bmatrix} \underline{\delta r} \\ \underline{\delta v} \\ \underline{\delta r}_L \end{bmatrix}$$

$$\therefore \quad \underline{b} = \frac{1}{|\underline{r}_{CL}|} \begin{bmatrix} \mu_s \\ 0 \\ -\mu_s \end{bmatrix}$$

RENDEZVOUS NAVIGATION PROGRAM
(P20)

The Rendezvous Navigation program, P20, is used during the rendezvous phases of flight. Both the CSM and LM computers have Program P20 so that the CSM can do rendezvous navigation by tracking the LM, or the LM can navigate by tracking the CSM. The CSM can navigate by measuring the line of sight to the LM using the SXT or the COAS, and/or the VHF ranging link. The LM uses the Rendezvous Radar to measure range, range rate, RR shaft angle bias, and RR trunnion angle bias.

The state vectors for rendezvous navigation are

$$\underline{x}_{CSM} = \begin{bmatrix} \underline{\delta r} \\ \underline{\delta v} \end{bmatrix} \qquad \underline{x}_{LM} = \begin{bmatrix} \underline{\delta r} \\ \underline{\delta v} \\ \delta\beta \\ \delta\theta \\ 0 \end{bmatrix}$$

where

$\underline{\delta r}$ = deviation from conic position

$\underline{\delta v}$ = deviation from conic velocity

$\delta\beta$ = RR shaft angle bias

$\delta\theta$ = RR trunnion angle bias

The Measurement Incorporation routine is used to incorporate the rendezvous measurements, and the geometry vectors are determined as follows.

- Line-of-Sight Measurements Made with the SXT or COAS. The line-of-sight measurements are incorporated into the state vector by adopting two fictitious star/landmark sightings just as with the LOS measurements made during orbital navigation.
- VHF Range Measurements Made by the CSM. The geometry vector for VHF ranging is derived in the same manner as the RR range measurement vector. The only difference is the dimension of the CSM which is only 6 versus 9 for the LM.

$$\underline{b} = \begin{bmatrix} {}^{*}\underline{u}_{CL} \\ \underline{0} \end{bmatrix}$$

(* is used depending on whether the LM or CSM state vector is being updated.)

The geometry relating the RR measurements to the state vector is described on the following pages.

RENDEZVOUS RANGE (r_m) MEASUREMENT

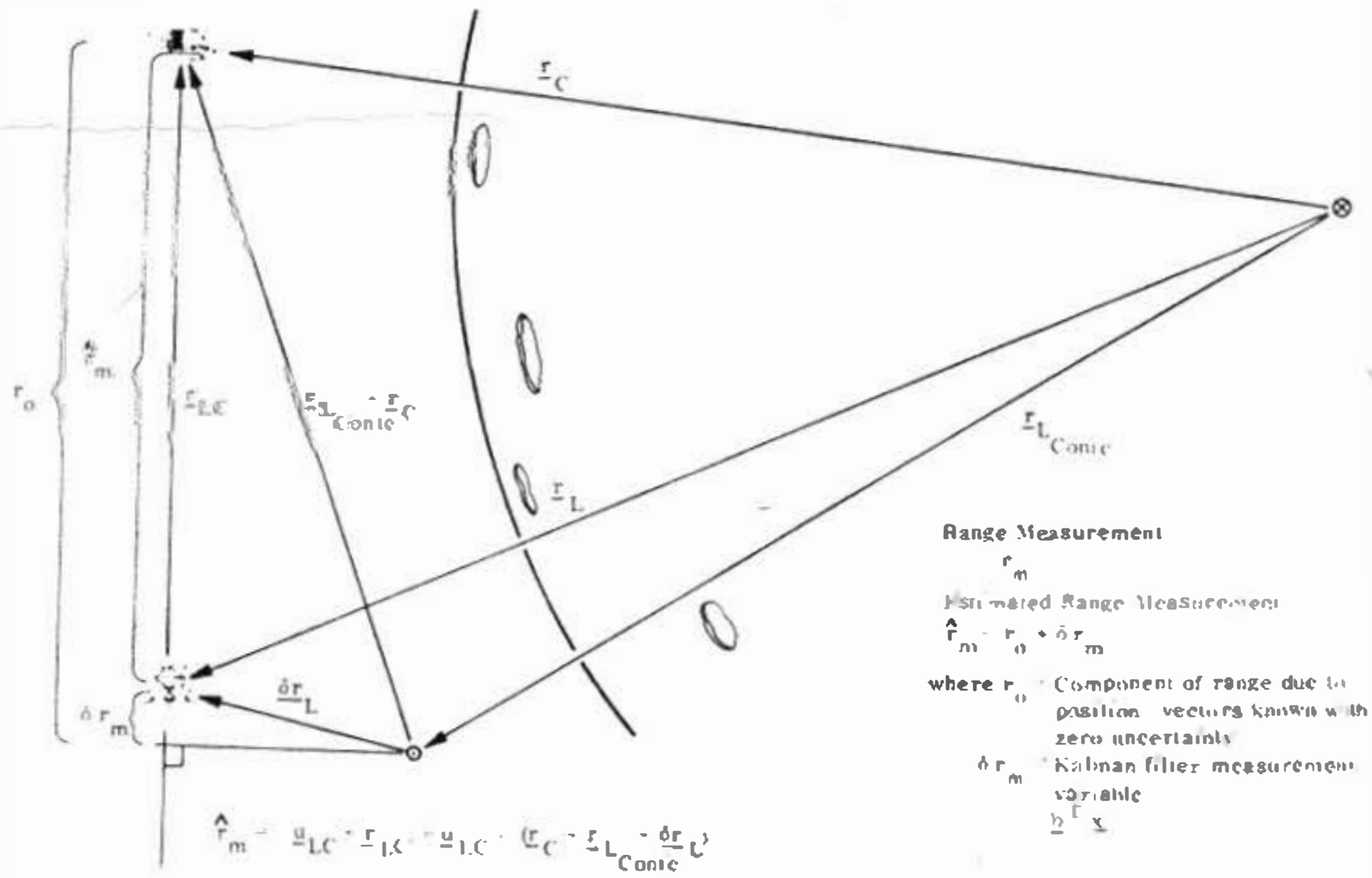

Range Measurement

r_m

Measured Range Measurement

$\hat{r}_m = r_o + \delta r_m$

where r_o = Component of range due to position vectors known with zero uncertainty

δr_m = Kalman filter measurement variable

$\underline{h}^T \underline{x}$

$$\hat{r}_m = \underline{u}_{LC} \cdot \underline{r}_L - \underline{u}_{LC} \cdot (\underline{r}_C - \underline{r}_{L_{Conic}} - \underline{\delta r}_L)$$

$$= \underline{u}_{LC} \cdot (\underline{r}_C - \underline{r}_{L_{Conic}}) - \underline{u}_{LC} \cdot \underline{\delta r}_L$$

$$r_o = \underline{u}_{LC} \cdot (\underline{r}_C - \underline{r}_{L_{Conic}})$$

$$\delta r_m = -\underline{u}_{LC} \cdot \underline{\delta r}_L \qquad \underline{h}^T \underline{x}$$

$$\underline{h} = \begin{bmatrix} -\underline{u}_{LC} \\ \underline{0} \\ \underline{0} \end{bmatrix} \qquad \underline{x} = \begin{bmatrix} \underline{\delta r}_L \\ \underline{\delta v}_L \\ \delta\beta \\ \delta\theta \\ 0 \end{bmatrix}$$

RENDEZVOUS RANGE RATE ($\dot{r}_m$) MEASUREMENT

Rendezvous range rate measurement has a term due to deviation from conic velocity ($\underline{\delta V}_L$) and a term due to deviation from conic position ($\underline{\delta r}_L$). The term due to velocity deviation ($\underline{\delta V}_L$) is:

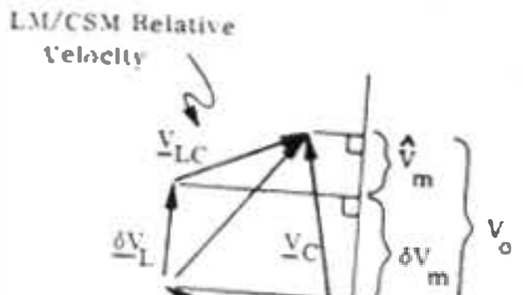

$$\hat{\dot{r}}_m = \underline{V}_{LC} \cdot \underline{u}_{LC}$$

$$= \underline{u}_{LC} \cdot (\underline{V}_C - \underline{V}_{L_{Conic}} - \underline{\delta V}_L) = \underline{u}_{LC} \cdot (\underline{V}_C - \underline{V}_{L_{Conic}}) - \underline{u}_{LC} \cdot \underline{\delta V}_L$$

$$\hat{\dot{r}}_m = V_o + \delta \dot{r}_m$$

where V_o = component of range rate due to Vectors known with zero uncertainty

$$= \underline{u}_{LC} \cdot (\underline{V}_C - \underline{V}_{L_{Conic}})$$

$\delta \dot{r}_m$ = Kalman filter measurement variable

$$= -\underline{u}_{LC} \cdot \underline{\delta V}_L$$

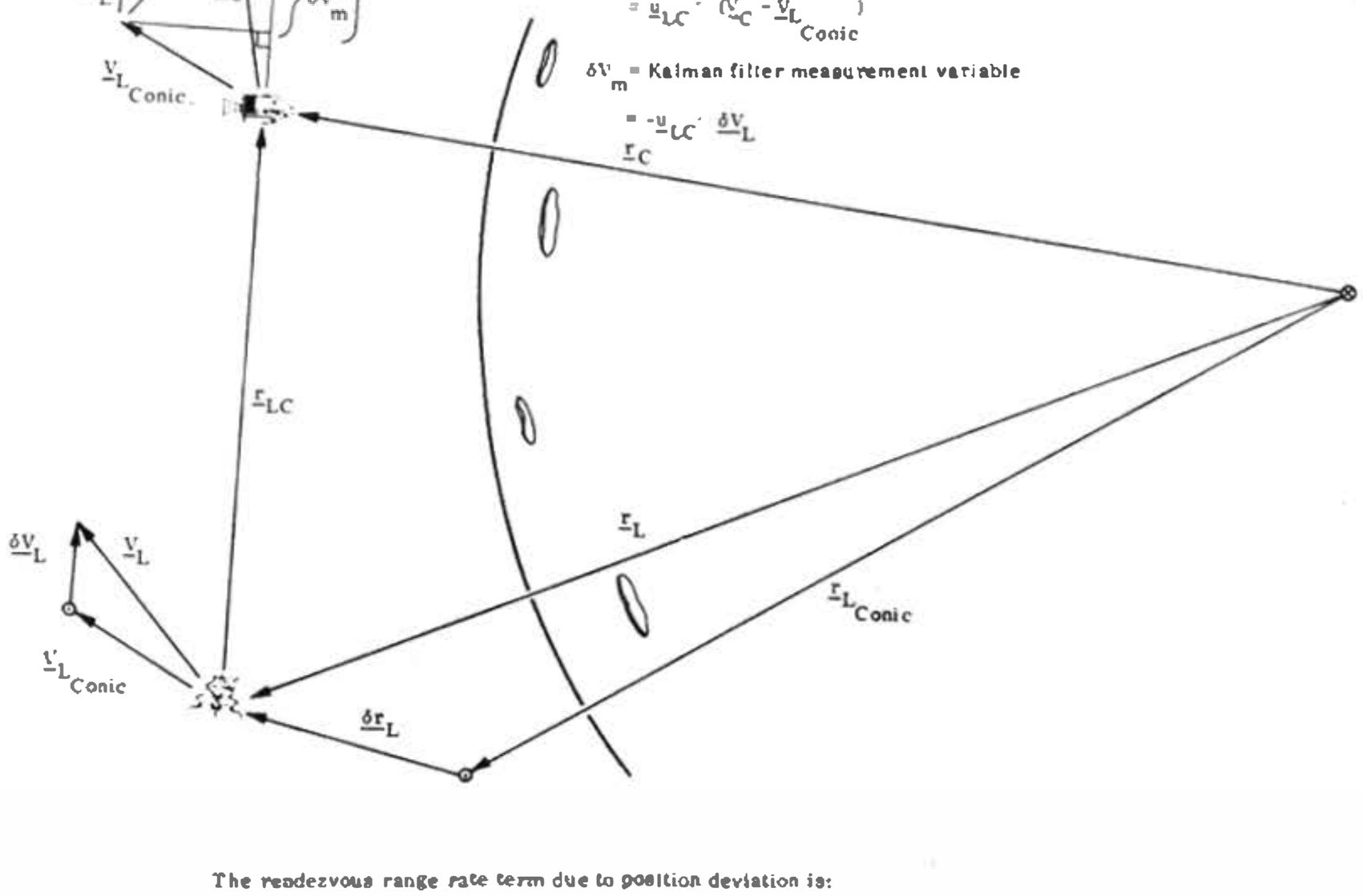

The rendezvous range rate term due to position deviation is:

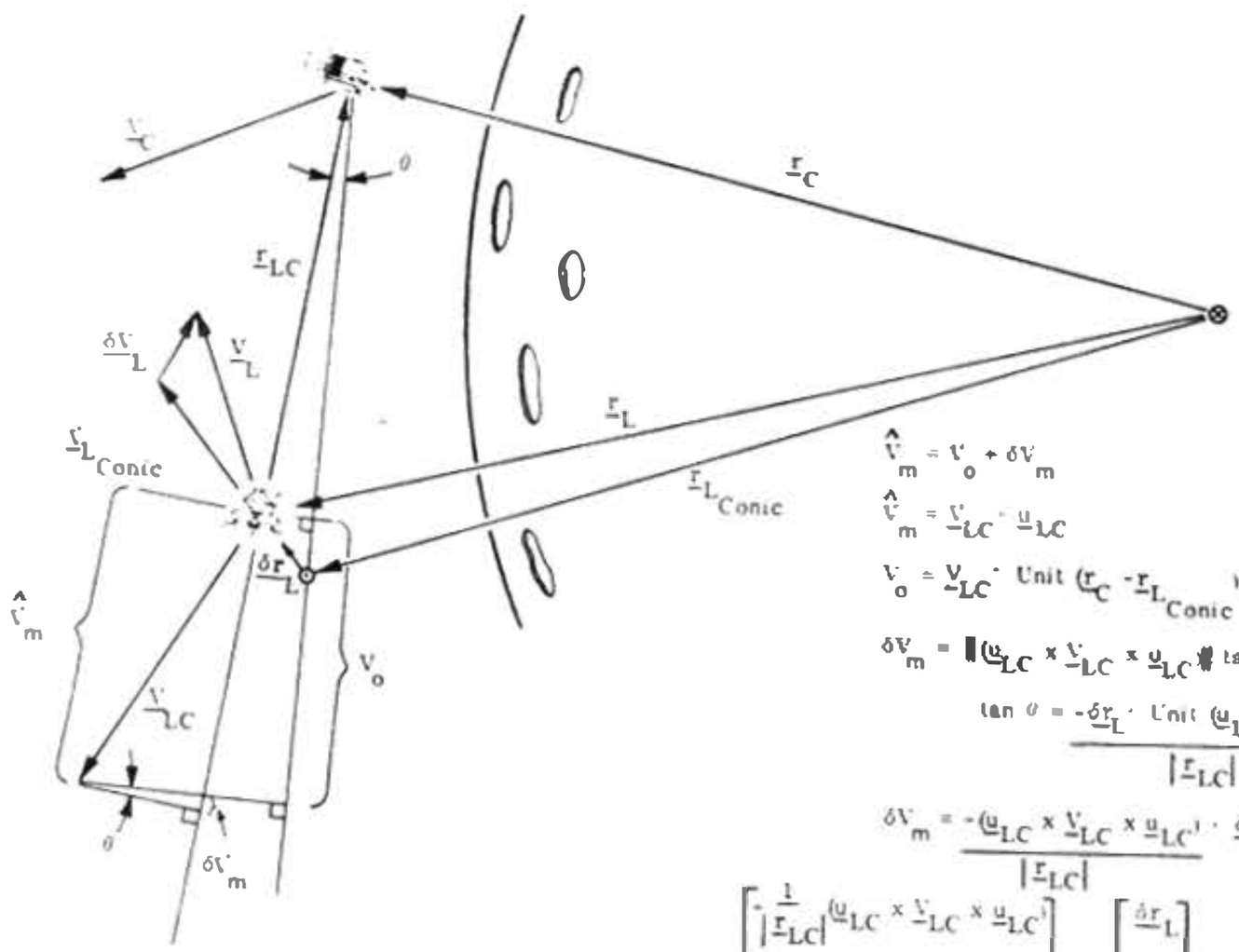

$$\hat{\dot{r}}_m = \dot{r}_o + \delta \dot{r}_m$$

$$\hat{\dot{r}}_m = \underline{V}_{LC} \cdot \underline{u}_{LC}$$

$$\dot{r}_o = \underline{V}_{LC} \cdot \text{Unit}(\underline{r}_C - \underline{r}_{L_{Conic}})$$

$$\delta \dot{r}_m = \| (\underline{\omega}_{LC} \times \underline{V}_{LC} \times \underline{u}_{LC}) \| \tan \theta$$

$$\tan \theta = \frac{-\underline{\delta r}_L \cdot \text{Unit}(\underline{\omega}_{LC} \times \underline{V}_{LC} \times \underline{u}_{LC})}{|\underline{r}_{LC}|}$$

$$\delta \dot{r}_m = \frac{-(\underline{\omega}_{LC} \times \underline{V}_{LC} \times \underline{u}_{LC}) \cdot \underline{\delta r}_L}{|\underline{r}_{LC}|}$$

$$\delta \dot{r}_m = \underline{H}_L \underline{x} = \begin{bmatrix} -\frac{1}{|\underline{r}_{LC}|}(\underline{\omega}_{LC} \times \underline{V}_{LC} \times \underline{u}_{LC}) \\ -\underline{u}_{LC} \\ \underline{0} \end{bmatrix} \cdot \begin{bmatrix} \underline{\delta r}_L \\ \underline{\delta V}_L \\ \delta\psi \\ \delta\theta \\ 0 \end{bmatrix}$$

RENDEZVOUS RADAR SHAFT ANGLE (β_m) MEASUREMENTS

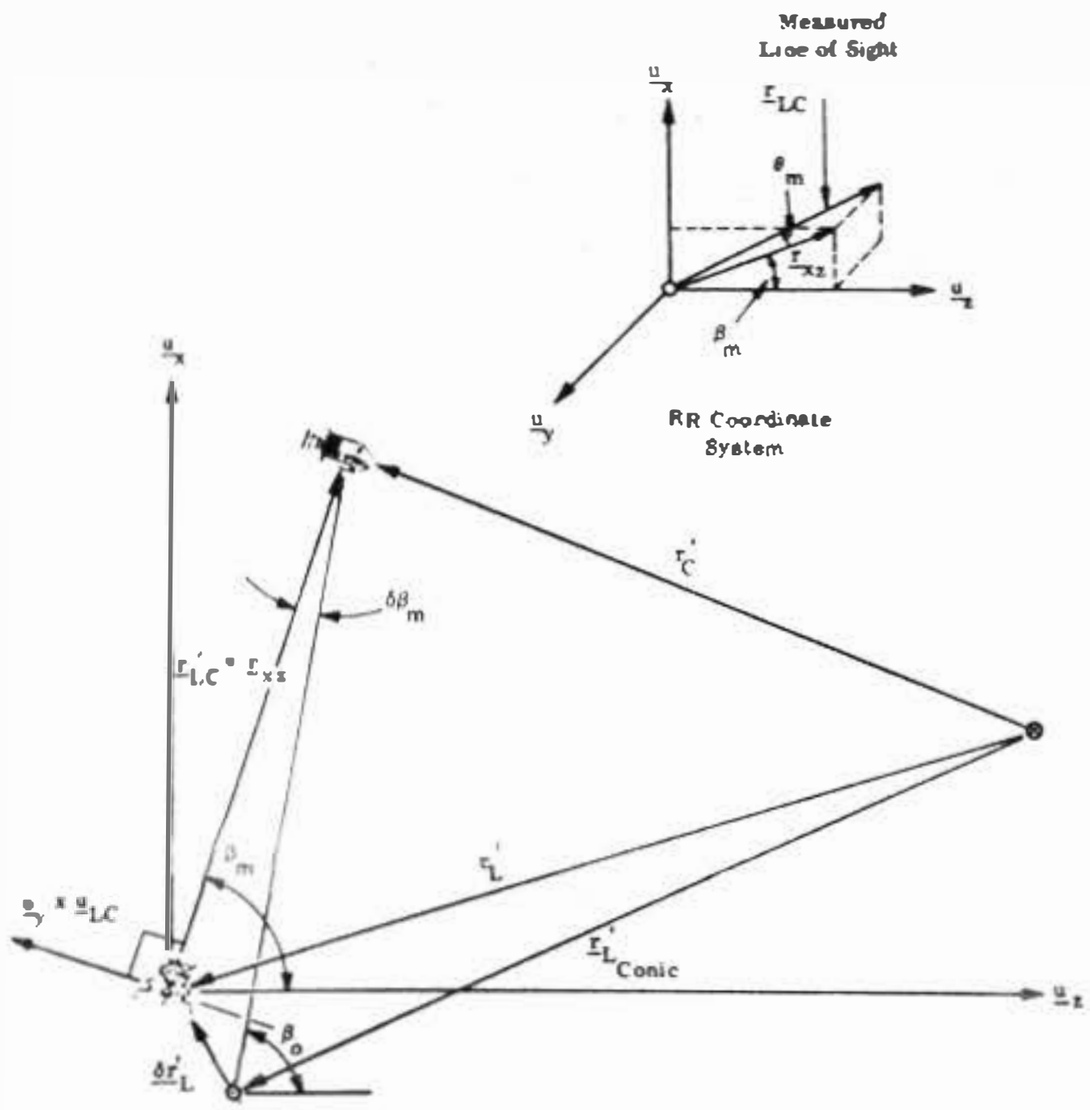

The Rendezvous Radar shaft angle is defined in the radar X-Z coordinate plane. The effect of LM and CSM position vectors on the shaft angle can be determined by looking at the projection of these vectors on the x-z plane:

$\beta_m = \beta_o + \delta\beta_m$

where β_m = estimate of RR shaft angle due to $\underline{r}_{LC}$

β_o = portion of RR shaft angle due to $\underline{r}_C$ and $\underline{r}_{L_{Conic}}$

$$\delta\beta_m = \frac{1}{r_{xz}} \left| \text{Unit}\left(\underline{u}_y \times \underline{u}_{LC}\right) \cdot \delta\underline{r}_L \right|$$

The actual measured shaft angle has two components a nominal one due to spacecraft position and an additional deviation term ($\delta\beta$) which is an element of the state vector.

$\hat{\beta}_m = \beta_m + \delta\beta = \beta_o + \delta\beta_m + \delta\beta$

The Kalman filter measurement variable. $\delta\beta_m + \delta\beta = \underline{b}^T \underline{x}$

$$\begin{bmatrix} \frac{1}{r_{xz}} \left| \text{Unit}\left(\underline{u}_y \times \underline{u}_{LC}\right) \right| \\ \underline{0} \\ 1 \\ 0 \\ 0 \end{bmatrix} \cdot \begin{bmatrix} \delta\underline{r}_L \\ \delta\underline{V}_L \\ \delta\beta \\ \delta\theta \\ 0 \end{bmatrix}$$

RENDEZVOUS RADAR TRUNNION ANGLE (θ) MEASUREMENTS

The rendezvous radar trunnion angle is defined in the $\underline{u}_{LC} - \underline{u}_y$ plane and can be illustrated by projecting the spacecraft position vectors onto this plane. Like the shaft angle it is divided into two components, a nominal one due to spacecraft positions and a deviation term ($\delta\theta$) which is an element of the state vector.

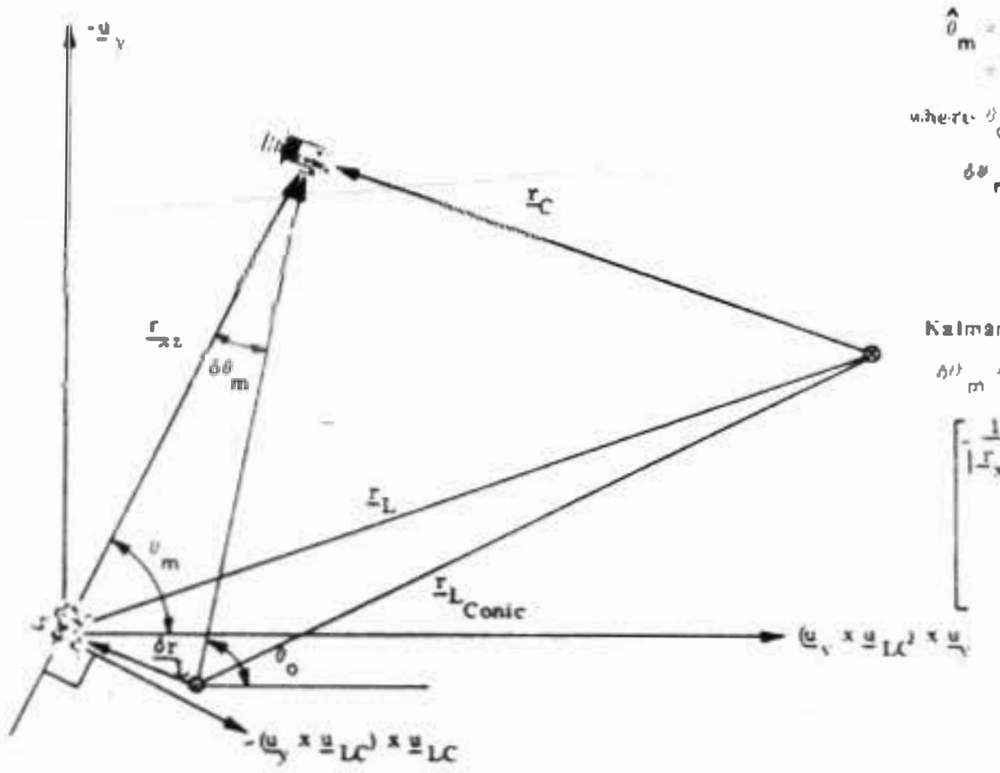

$\hat{\theta}_m = \theta_m + \delta\theta$

$= \theta_o + \delta\theta_m + \delta\theta$

where θ_o = component of θ_m due to $\underline{r}_C + \underline{r}_{L_{Conic}}$

$\delta\theta_m$ = component of θ_m due to $\delta\underline{r}_L$

$= \delta\underline{r}_L \cdot \left|\frac{-1}{\underline{r}_{xz}}\right| \text{Unit}\left|\left(\underline{u}_y \times \underline{u}_{LC}\right) \times \underline{u}_{LC}\right|$

Kalman filter measurement variable

$\delta\theta_m + \delta\theta = \underline{h}^T \underline{x}$

$$\begin{bmatrix} -\frac{1}{|\underline{r}_{xz}|} \text{Unit}\left|\left(\underline{u}_y \times \underline{u}_{LC}\right) \times \underline{u}_{LC}\right| \\ \underline{0} \\ 0 \\ 1 \\ 0 \end{bmatrix} \cdot \begin{bmatrix} \delta\underline{r}_L \\ \delta\underline{V}_L \\ \delta\beta \\ \delta\theta \\ 0 \end{bmatrix}$$

CSM DIGITAL AUTOPILOT

The CSM digital autopilot (DAP) provides a primary atabilization and control function and attitude error display for CSM or CSM/LM coasting flight, CSM or CSM/LM powered flight and CM entry, as well as a backup SATURN takeover function.

COASTING FLIGHT

The CSM coasting flight autopilot or reaction control system autopilot (RCS DAP) provides attitude and translation control in three CSM axes during nonthruating phases of flight. The RCS DAP has three major modes of operation. Auto, Hold and Free, as commanded by the S/C CONTROL switch.

The Hold mode maintains or holds the spacecraft (S/C) at a desired attitude within the limits of an attitude deadband specified by the crew. Rotational hand controller (RHC) commands will be processed as the discrete commanded rate specified in the DAP variable load; a new desired attitude will be established and maintained opon release of the RHC.

The Auto mode enables rate and attitude commands from the steering routines to be processed by the DAP for maneuvering the S/C to a desired attitude at a specified rate. With the absence of maneuver commands, the Auto mode functions as an attitude hold mode. RHC commands are processed in the Auto mode as a discrete commanded rate and automatic maneuvering is terminated until resumed by crew action via the DSKY.

The Free mode of operation releases the S/C from all maneuvers and attitude hold commands, other than minimum impulse commands, and allows the S/C to drift freely. Minimum impulse commands are single 14-millisecond control jet firings which are commanded by the RHC or, if there are no RHC commands, by the minimum-impulse controller (MIC).

Translation hand controller (THC) commands are processed in any mode and are combined with rotation commands for the desired maneuver. When a combination rotation and translation is not possible, due to a quad failure, the rotation command has priority.

ERROR DISPLAY

The DAP also provides attitude error display to the crew via the FDAI attitude error meters. There are three types of attitude error displays available.

- To provide a monitor of autopilot performance, the autopilot following errors or phase plane errors in control axis coordinates can be displayed by keying a V61E.
- To aid the crew in executing a manual maneuver, the total attitude error with respect to the desired maneuver angles in N22 can be displayed by keying V62E.
- Total Astronaut attitude error with respect to preloaded N17 angles can be displayed by keying V63E providing another manual maneuver aid. N17 can be loaded with a snapshot of the present CDU angles by keying V60E.

POWERED FLIGHT

The powered flight autopilot stabilizes and controls the attitude of the spacecraft and maintains thrust vector control (TVC) during service propulsion system (SPS) thrusting. Pitch and Yaw axis control is achieved by TVC DAP generated commands to the SPS engine gimbal servos to maintain the thrust vector through the center of gravity of the vehicle. The TVC DAP also accepts angular rate commands from the steering program to position the thrust vector along a desired thrust direction.

Roll axis attitude and rate control during powered flight is accomplished by the TVC Roll DAP. Its function is strictly to provide attitude hold about the roll axis of the spacecraft by means of RCS thrusters.

ENTRY

The entry autopilot provides attitude control of the command module (CM) from separation from the service module (SM) to deployment of the drogue chutes. The DAP has an extra-atmospheric phase and an atmospheric phase. The extra-atmospheric phase provides three-axis spacecraft control for the trajectory segment prior to 0.05 g and accepts attitude commands from entry guidance to orient the S/C for the onset of 0.05 g. The atmospheric phase provides attitude control, after 0.05 g about entry roll or about the vector direction of S/C velocity relative to the air mass, to steer the S/C along the entry trajectory. The DAP accepts steering commands from the entry guidance programs.

SATURN TAKEOVER

In the event of a Saturn instrumentation unit (IU) fail, a capability is provided for the CMC to issue angular rate steering commands to the IU autopilot. CMC takeover of Saturn control, which is accomplished by means of the LV GUIDANCE switch, may be an automatic or manual steering mode.

The manual or stick mode is available by keying V46E, which terminates computation of automatic mode attitude errors. Discrete rate commands, based on erasable parameters, are initiated by means of the RHC and transmitted to the IU autopilot.

DAP DATA

The DAP registers containing the variable parameters which determine DAP selection and desired DAP performance are accessible by keying V48E.

CSM DAP CONTROL

V48E
Flashing V04 N46

	A	B	C	D	E
Register 1:	CONFIG	XTAC	XTBD	DB	RATE

CONFIG - Vehicle Configuration

0 = No DAP is requested
1 = CSM alone
2 = CSM and LM
3 = SIVB, CSM and LM (SIVB control)
6 = CSM and LM (ascent stage only)

XTAC - X-Translations Using Quads AC

0 = Do not use AC
1 = Use AC

XTBD - X-Translations Using Quads BD

0 = Do not use BD
1 = Use BD

DB - Angular Deadband for Attitude Hold and Automatic Maneuvers

0 = ±0.5 degree
1 = ±5.0 degrees

RATE - RotationalRate for RHC in HOLD or AUTO Mode and for Automatic Maneuvers.

0 = 0.05 deg/s
1 = 0.2 deg/s
2 = 0.5 deg/s
3 = 2.0 deg/s

Register 2:	AC Roll	Quad A	Quad B	Quad C	Quad D

AC Roll - Roll-Jet selection

0 = Use BD roll Quads
1 = Use AC roll Quads

A, B, C, D - Quad fails

0 = Quad has failed
1 = Quad operational

Flashing V06 N47

Register 1: CSM weight in pounds

Register 2: LM weight in pounds

Flashing V06 N48

Register 1: Pitch-trim gimbal offset, in 1/100 degree

Register 2: Yaw-trim gimbal offset, in 1/100 degree

AUTOMATIC MODE

1. Automatic three-axis rotation.
2. Manual three-axis rotation and translation
3. Attitude hold to program or manual defined attitude.
4. Automatic rate damping.

ATTITUDE HOLD MODE

1. Manual three-axis rotation and translation.
2. RHC produces a rotational rate as specified by N46 while out of detent.
3. Attitude hold to attitude selected via hand controller.
4. Automatic rate damping.

CSM DIGITAL AUTOPILOT
COASTING FLIGHT

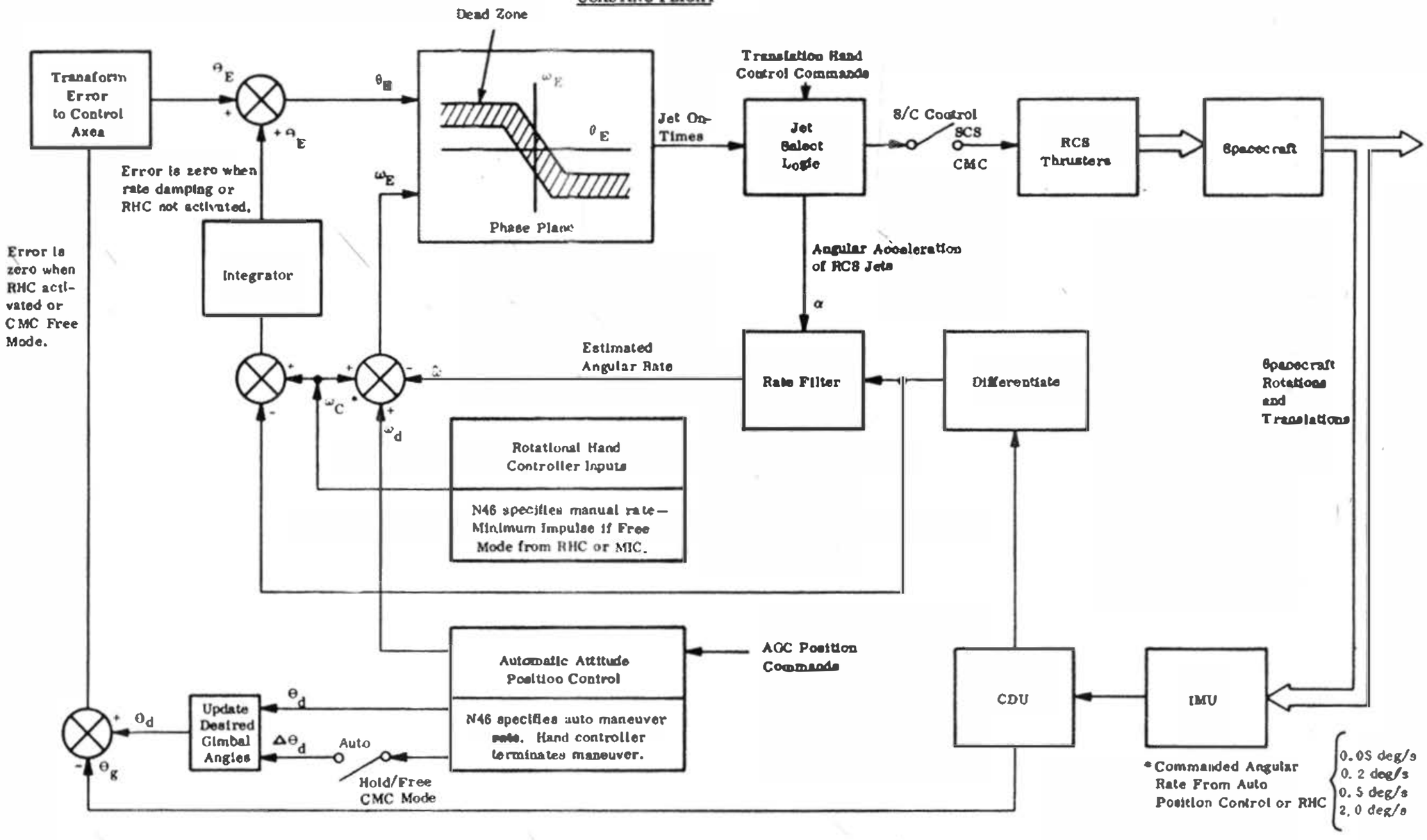

CSM DIGITAL AUTOPILOT
FDAI ATTITUDE ERROR DISPLAY

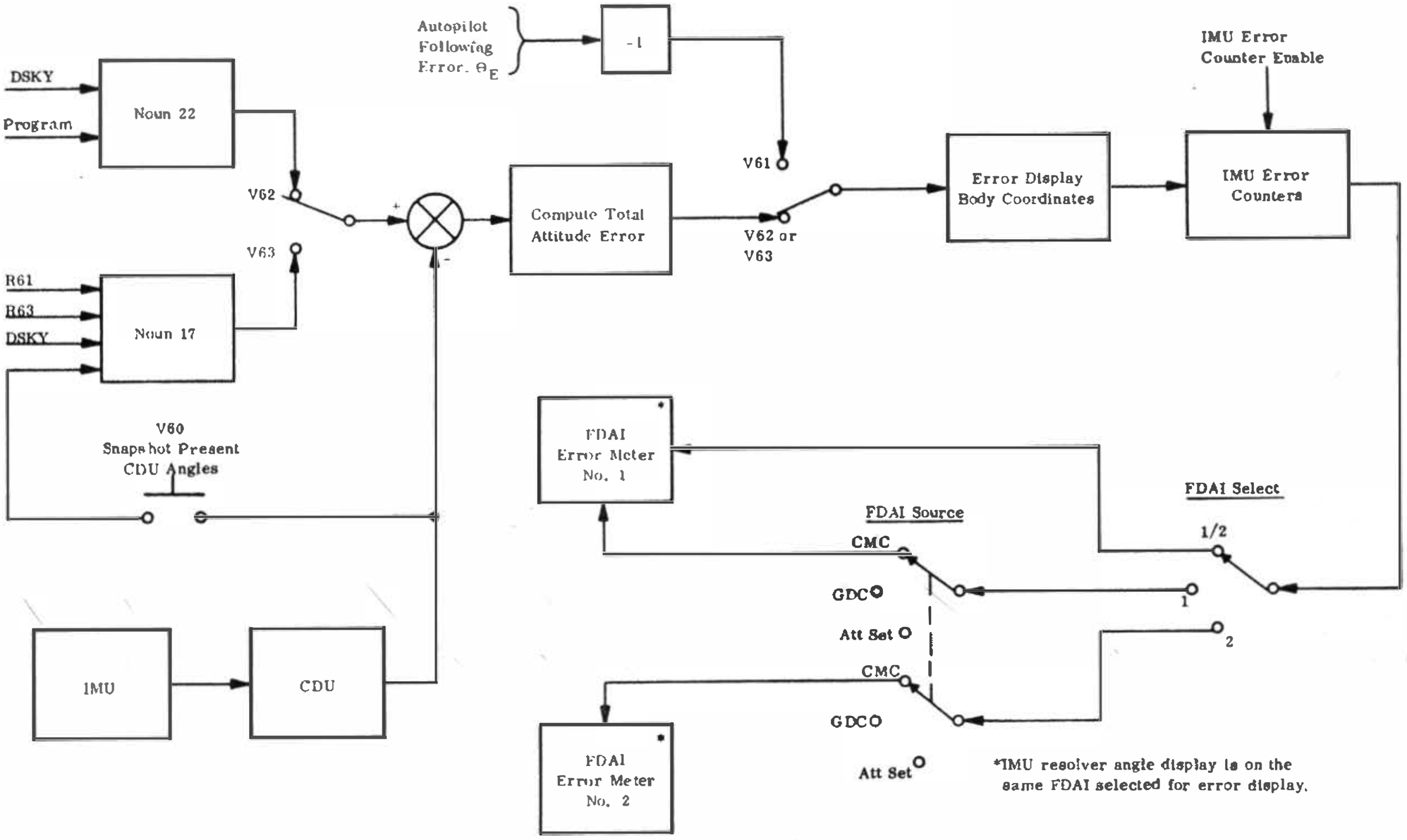

SC.'9

CSM DIGITAL AUTOPILOT
POWERED FLIGHT THRUST VECTOR CONTROL

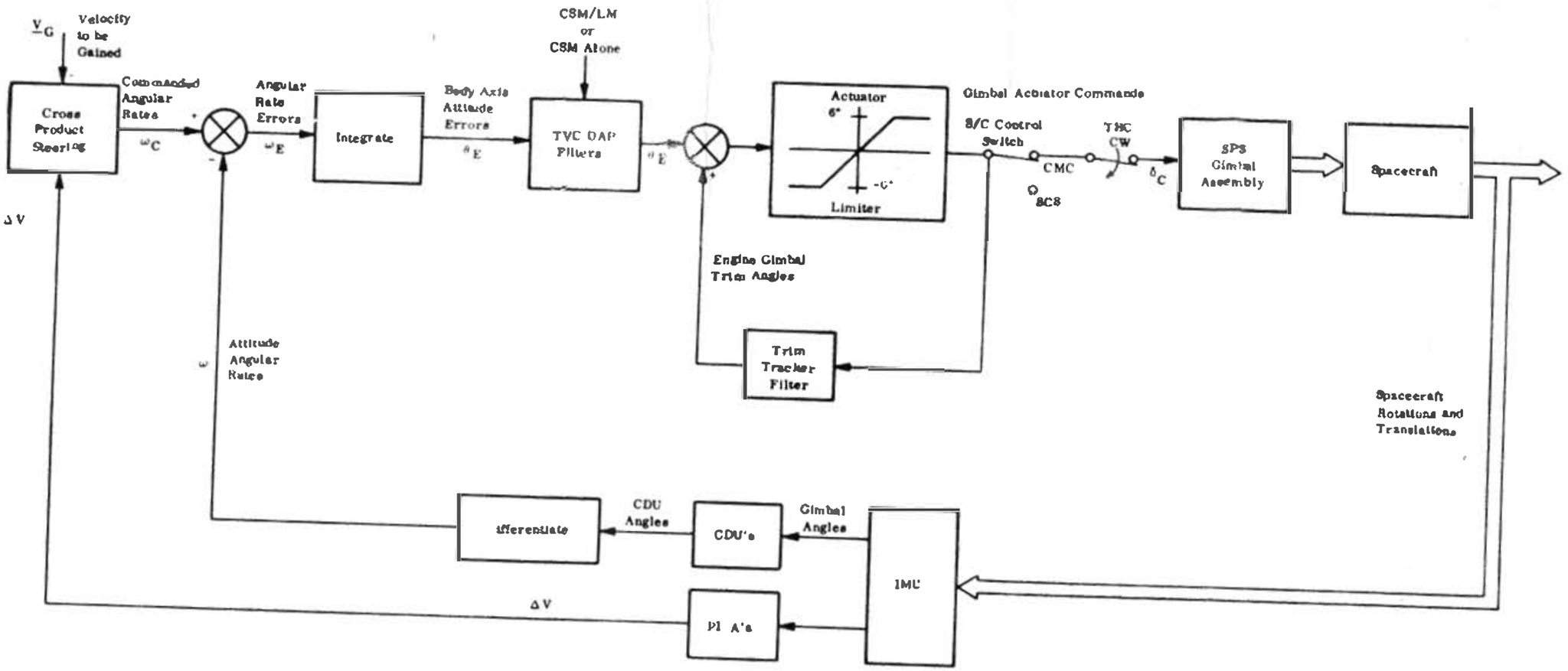

CSM DIGITAL AUTOPILOT
POWERED FLIGHT ROLL ATTITUDE CONTROL

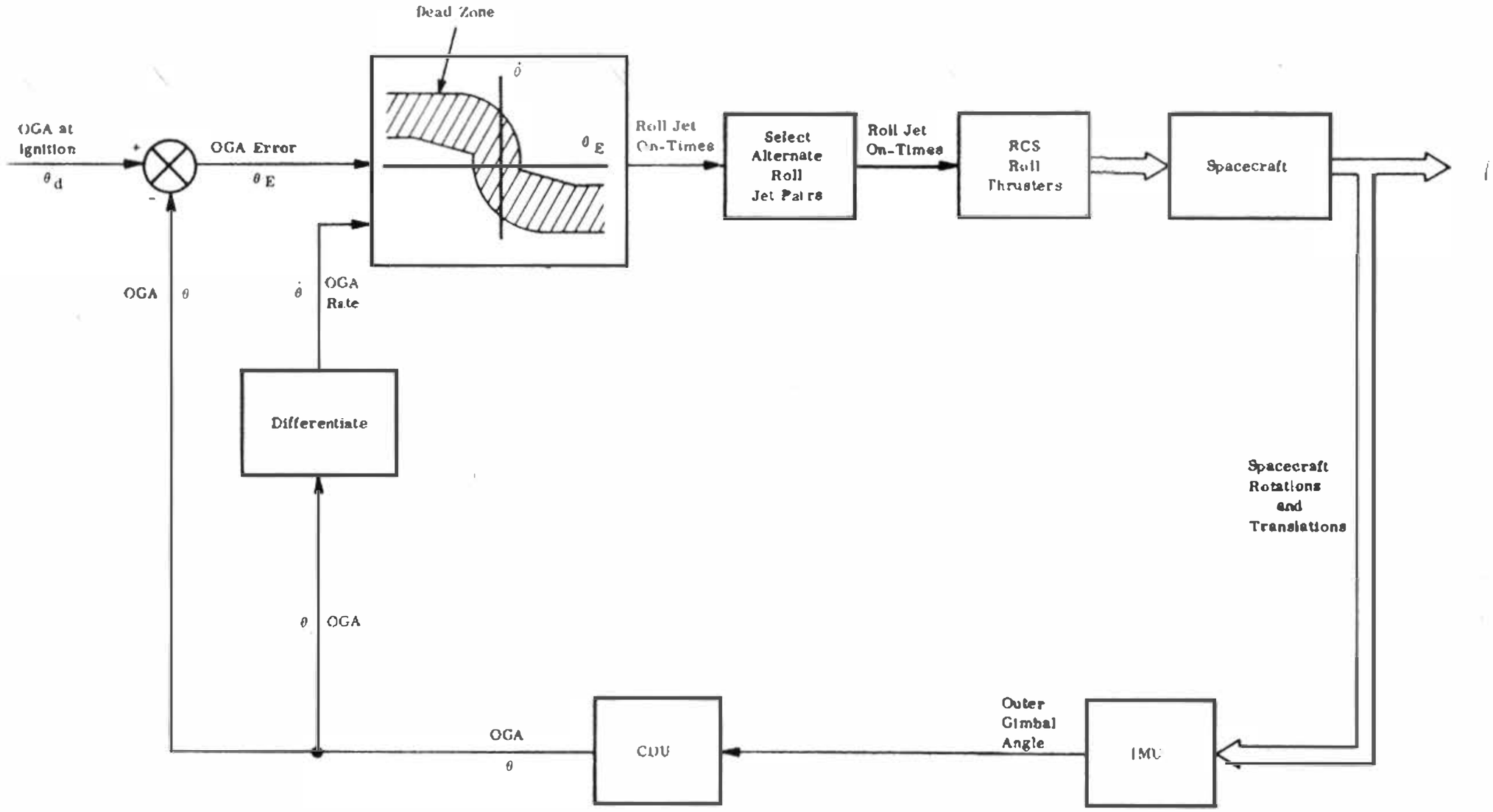

CSM DIGITAL AUTOPILOT
CMC TAKEOVER OF SATURN

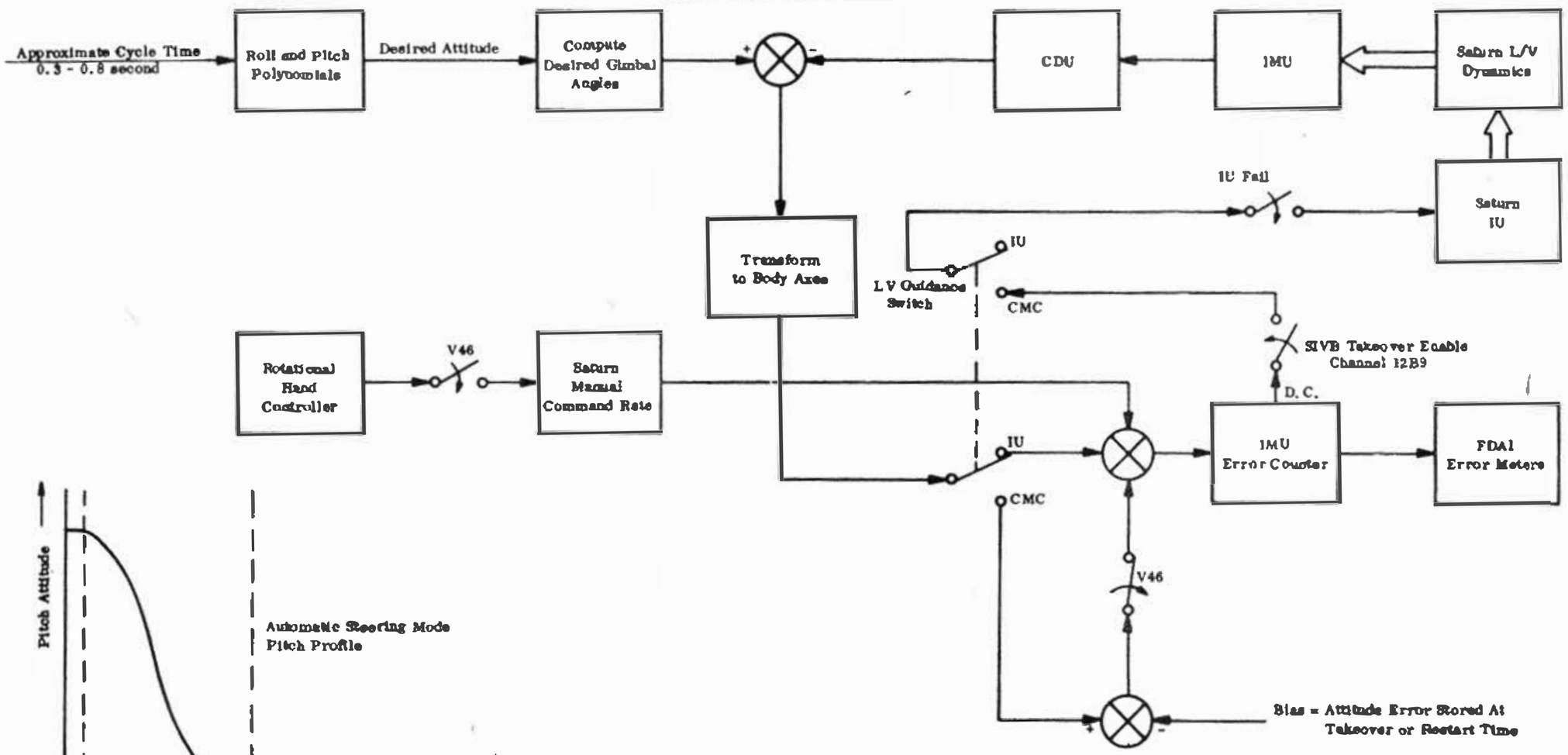

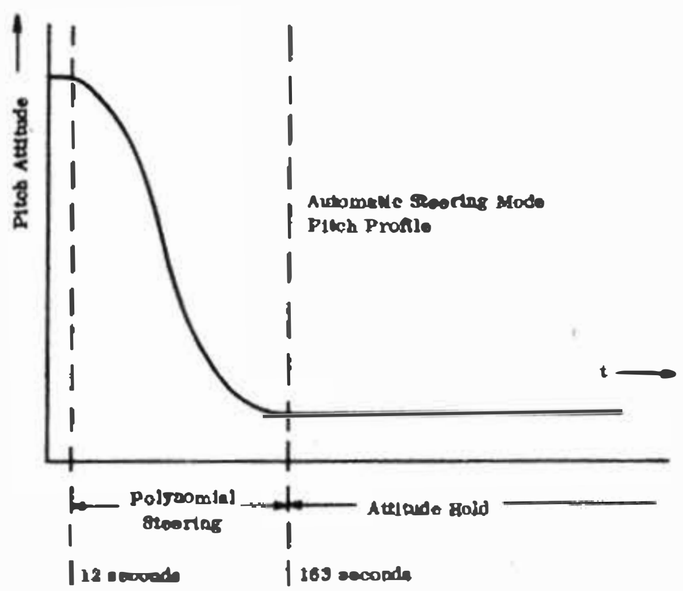

CSM DIGITAL AUTOPILOT
ENTRY

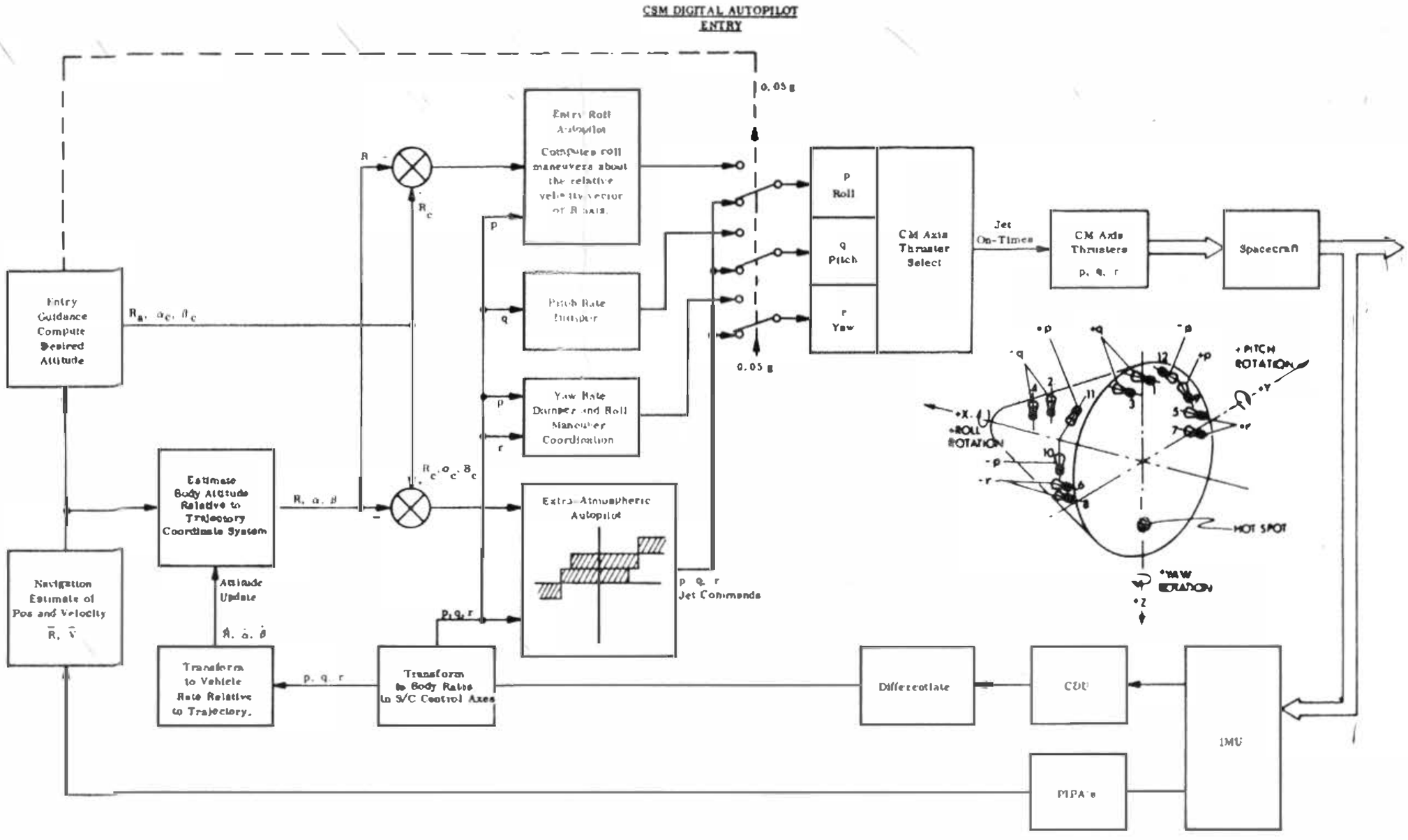

LM DAP CONTROL

Flashing V01 N46

Register 1:

A	B	C	D	E
CONFIG	ACC	ACA	DB	RATE

CONFIG – Vehicle Configuration

1 = Ascent stage only
2 = Ascent and descent stages
3 = LM and CSM docked

ACC – Acceleration Code

0 = Two-jet translation (RCS System A - minimum impulse)
1 = Two-jet translation (RCS System B - minimum impulse)
2 = Four-jet translation (RCS System A - minimum impulse)
3 = Four-jet translation (RCS System B - minimum impulse)

ACA – ACA Scaling

0 = Fine (4 deg/s, max. rate) (0.4 deg/s if docked)
1 = Normal (20 deg/s, max. rate) (2 deg/s if docked)

DB – Deadband

0 = 0.3 degree
1 = 1.0 degree
2 = 5.0 degrees
3 = 5.0 degrees

RATE – Maneuver Rate (Automatic Mode)

0 = 0.2 deg/s
1 = 0.5 deg/s
2 = 2.0 deg/s
3 = 10.0 deg/s
Use 0 or 1 if docked

Register 2:

A	B	C	D	E
			AUTO THROT	ABORT MONITOR

A = B = C = 0

AUTO THROT – Auto Throttle Backup

0 = Check Channel 30 Bit 5 for Auto Throttle switch setting
1, 3, 5, 7 = Bypass auto throttle check of Code 00203 and P66

ABORT MONITOR – Abort Monitor

0 = Check Bits 1 and 4, of Channel 30 for Abort with descent or ascent stage
1, 3, 5, 7 = Bypass (R11) monitor of the Abort/Abort Stage pushbuttons for an abort

Flashing V06 N47

Register 1: LM weight in pounds

Register 2: CSM weight in pounds

Flashing V06 N48

Register 1: Pitch-trim engine gimbal angle, in 0.01 degree

Register 2: Roll-trim engine gimbal angle, in 0.01 degree

AUTOMATIC MODE	ATTITUDE HOLD MODE
1. Automatic three-axis rotation and translation.	1. Manual three-axis translation.
2. Manual three-axis translation.	2. Manual three-axis rate command using V77.
3. Manual X-axis rate command (inhibited in LPO phase)	3. Manual minimum impulse command using V76.
4. Attitude hold to program defined attitude.	4. Attitude hold to attitude selected via hand controller.
5. Automatic rate damping	5. Automatic rate damping.

V77 – Used to provide a manual rate command. Commanded rotational rate is proportional to hand controller (ACA) deflection. Maximum commanded rotational rate is either 4 deg/s or 20 deg/s as chosen in DAP Data Load routine.

V76 – Used to provide a minimum impulse command. Releases Attitude Hold mode and allows vehicle to drift freely. One impulse is produced for each hand controller (ACA) deflection greater than 2.5 degrees.

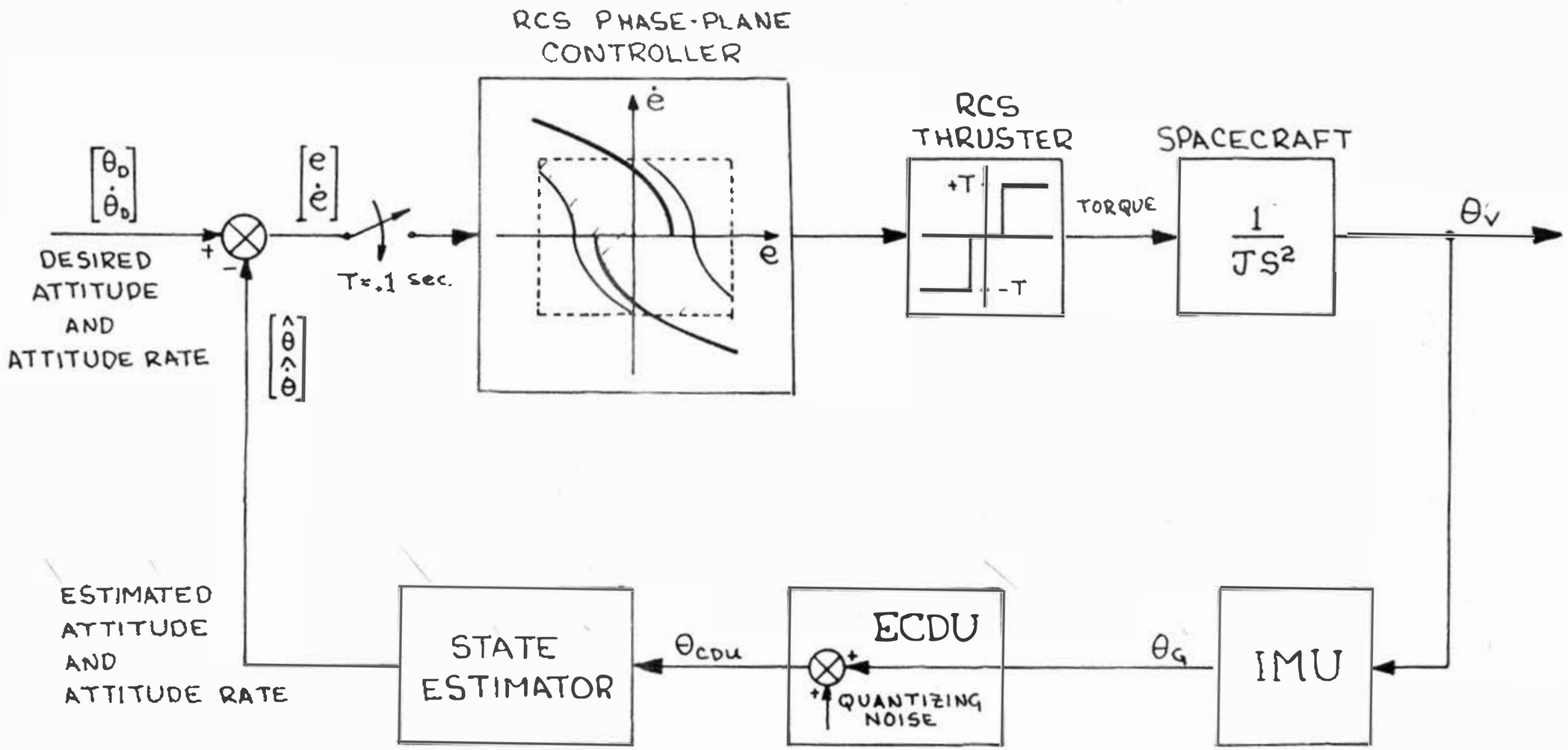

LM DIGITAL AUTOPILOT
FUNCTIONAL BLOCK DIAGRAM
COASTING FLIGHT

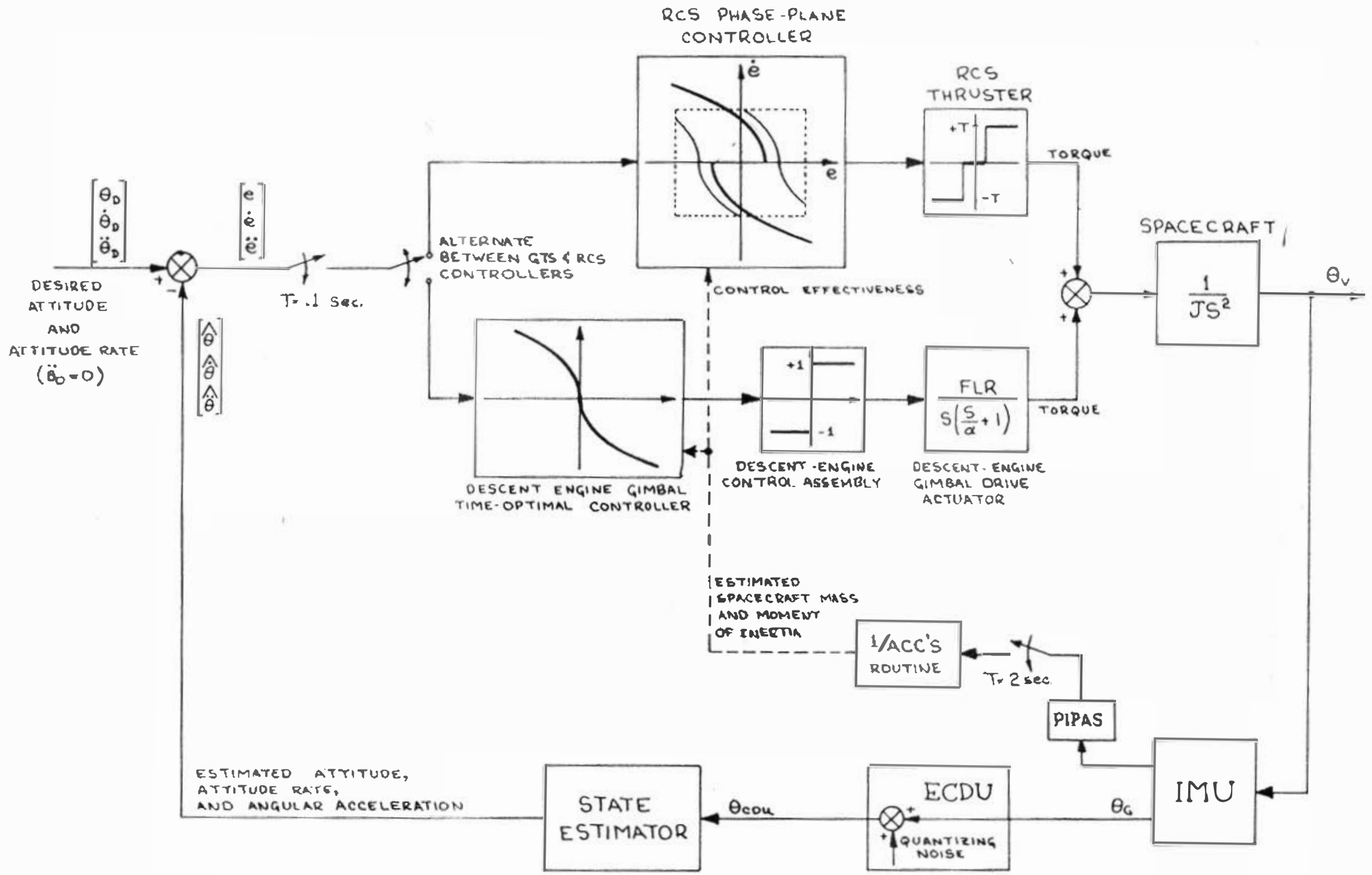

LM DIGITAL AUTOPILOT
FUNCTIONAL BLOCK DIAGRAM
POWERED FLIGHT

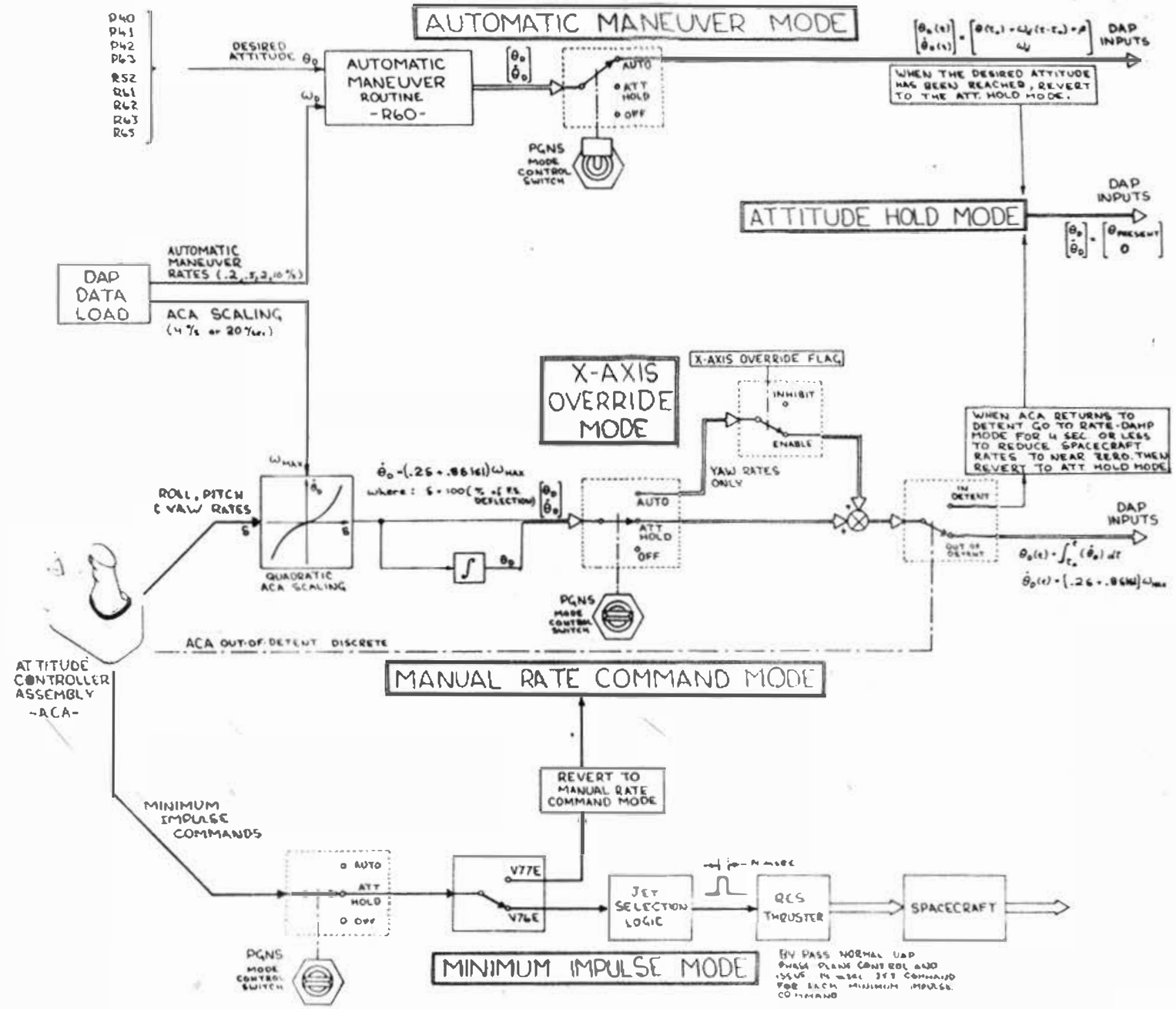
AUTOMATIC MANEUVER MODE
P40
P41
P42
P63
R52
R61
R62
R63
R65
DESIRED ATTITUDE θ_D
ω_D
AUTOMATIC MANEUVER ROUTINE -R60-
AUTO
ATT HOLD
OFF
PGNS MODE CONTROL SWITCH
DAP INPUTS
WHEN THE DESIRED ATTITUDE HAS BEEN REACHED, REVERT TO THE ATT. HOLD MODE.
ATTITUDE HOLD MODE
DAP INPUTS
DAP DATA LOAD
AUTOMATIC MANEUVER RATES (.2, .5, 2, 10 %)
ACA SCALING (4 %/s or 20 %/sec.)
X-AXIS OVERRIDE MODE
X-AXIS OVERRIDE FLAG
INHIBIT
ENABLE
YAW RATES ONLY
WHEN ACA RETURNS TO DETENT GO TO RATE-DAMP MODE FOR 4 SEC OR LESS TO REDUCE SPACECRAFT RATES TO NEAR ZERO. THEN REVERT TO ATT HOLD MODE
ROLL, PITCH & YAW RATES
ω_{MAX}
QUADRATIC ACA SCALING
$\dot{\theta}_D = (.26 + .86|\delta|)\omega_{MAX}$
where: $\delta = 100$ (% of F.S. DEFLECTION)
AUTO
ATT HOLD
OFF
IN DETENT
OUT OF DETENT
DAP INPUTS
$\theta_D(t) = \int_{t_0}^{t} (\dot{\theta}_D)\, dt$
$\dot{\theta}_D(t) = [.26 + .86|\delta|]\omega_{MAX}$
PGNS MODE CONTROL SWITCH
ACA OUT-OF-DETENT DISCRETE
ATTITUDE CONTROLLER ASSEMBLY -ACA-
MANUAL RATE COMMAND MODE
REVERT TO MANUAL RATE COMMAND MODE
MINIMUM IMPULSE COMMANDS
AUTO
ATT HOLD
OFF
V77E
V76E
JET SELECTION LOGIC
RCS THRUSTER
SPACECRAFT
PGNS MODE CONTROL SWITCH
MINIMUM IMPULSE MODE
BY PASS NORMAL DAP PHASE PLANE CONTROL AND ISSUE 14 MSEC JET COMMAND FOR EACH MINIMUM IMPULSE COMMAND

PHASE-PLANE FUNDAMENTALS

The equations describing spacecraft attitude errors and attitude rate errors in the phase plane are derived as follows:

ATTITUDE RATE ERRORS

$$\dot{e}(t) = \dot{\theta}(t) - \dot{\theta}_D(t) \qquad (1)$$

where

$\dot{e}(t)$ = Attitude rate error

$\dot{\theta}_D(t)$ = Desired attitude rate

$= \dot{\theta}_D(t_o)$ (desired rate is constant over sample interval)

$\dot{\theta}(t)$ = Actual spacecraft rate

$= \dot{\theta}(t_o) + a(t - t_o)$

(a = control + disturbance acceleration and is assumed constant over sample interval)

$$\therefore \dot{e}(t) = \underbrace{\dot{\theta}(t_o) - \dot{\theta}_D(t_o)}_{\dot{e}_o} + a(t - t_o) \qquad (2)$$

ATTITUDE ERRORS

$$e(t) = \theta(t) - \theta_D(t) \qquad (3)$$

where

$e(t)$ = Attitude error

$\theta_D(t)$ = Desired spacecraft attitude

$= \theta_D(t_o) + \dot{\theta}_D(t_o)(t - t_o)$

(desired attitude should be integral of desired rate for proper phase-plane control)

$\theta(t)$ = Actual spacecraft attitude

$$= \theta(t_o) + \dot{\theta}(t_o)(t - t_o) + \frac{1}{2}a(t - t_o)^2$$

$$\therefore e(t) = \underbrace{\theta(t_o) - \theta_D(t_o)}_{e_o} + \underbrace{\{\dot{\theta}(t_o) - \dot{\theta}_D(t_o)\}}_{\dot{e}_o}(t - t_o) + \frac{1}{2}a(t - t_o)^2 \qquad (4)$$

Equations 2 and 4 above can be combined to eliminate $(t - t_o)$ and solve for the phase plane equation of $e(t)$.

$$e(t) = e_o + [\dot{e}(t)^2 - \dot{e}_o^2]/2a \qquad \text{(for constant torque)} \qquad (5)$$

or

$$\dot{e}(t) = \dot{e}_o = \text{constant} \qquad \text{(for zero torque)} \qquad (6)$$

Equation 5 describes a parabola that goes in a clockwise phase plane direction for negative applied torque and in a counterclockwise direction for positive torque. Equation 6 describes a straight line going to the right for positive initial rates and to the left for negative initial rates. Equations 5 and 6 together describe a typical limit cycle trajectory that travels in a clockwise direction about the origin of the error plane as shown below.

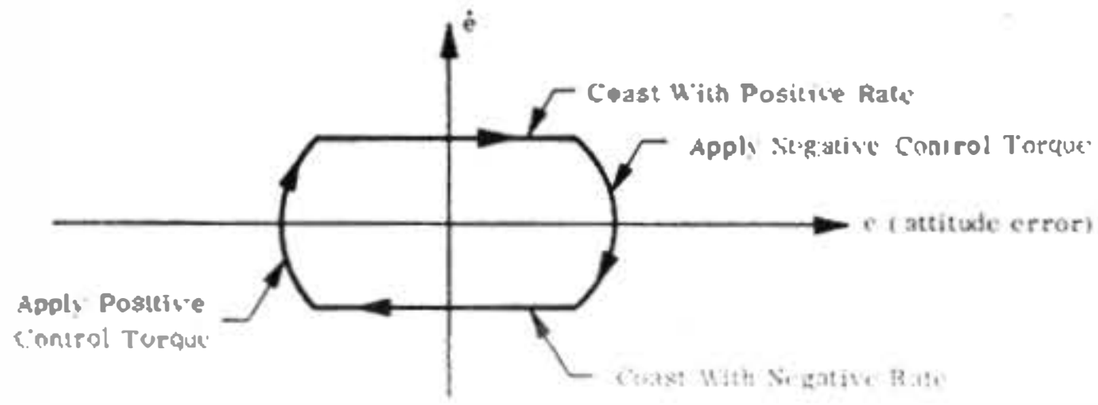

OPTIMAL PHASE PLANE CONTROLLERS

(double integral plant with maximum control acceleration = a)

TIME-OPTIMAL CONTROLLER

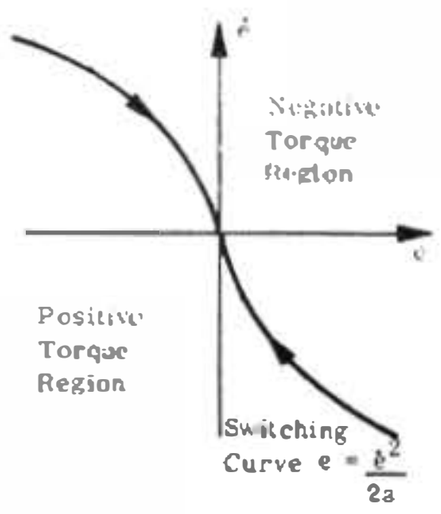

PURPOSE:

To bring e and ė to zero in minimum time.

FUEL-OPTIMAL CONTROLLER

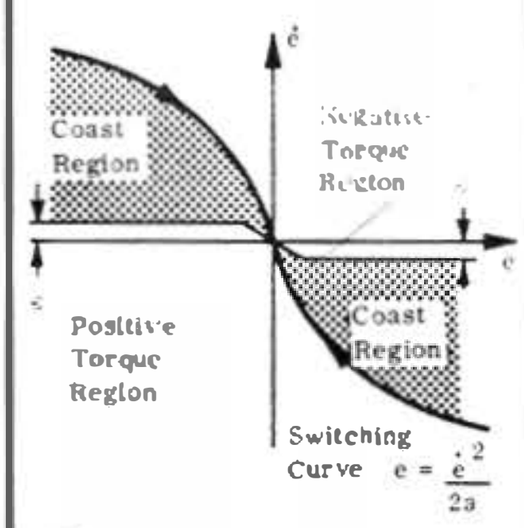

PURPOSE:

To bring e and ė to zero with minimum fuel consumption. (ė must be diminishingly small for minimum fuel. This drastically increases response time.)

COMBINATION CONTROLLER

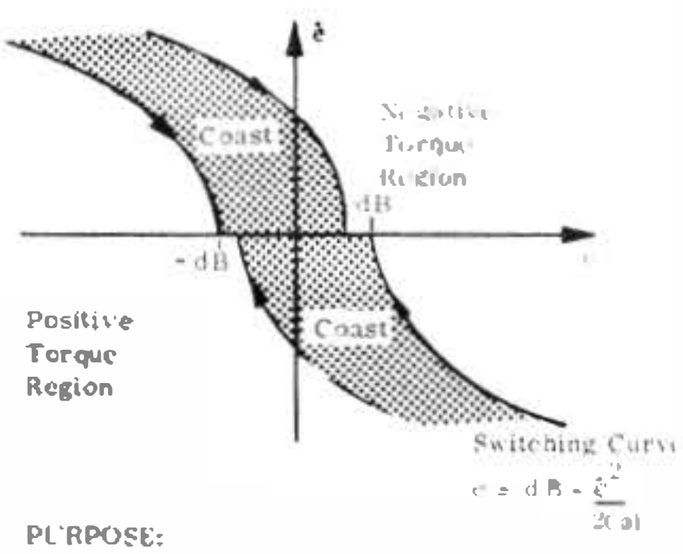

PURPOSE:

To achieve a satisfactory mix of time and fuel optimal control and at the same time minimize the number of RCS jet firings by establishing coasting deadbands.

LM UNDOCKED PHASE-PLANE

The purpose of the LM Undocked Phase-Plane logic is to compute and issue commands to the RCS thrusters in order to null spacecraft attitude and attitude rate errors. The thruster commands are in the form of a signed time, where the sign indicates the sense of rotation (positive or negative) and the time is the duration of thrusting required to reach the phase-plane switching boundary. In order to achieve these ends, the phase-plane is divided into two principal regions, ROUGHLAW and FINELAW.

ROUGHLAW

The ROUGHLAW phase-plane logic is used for coarse control of the spacecraft when the phase-plane errors are greater than 11.25 degrees and/or 5.625 degrees/second. The division between the positive and negative thrusting regions are shown lo the diagram on the right.

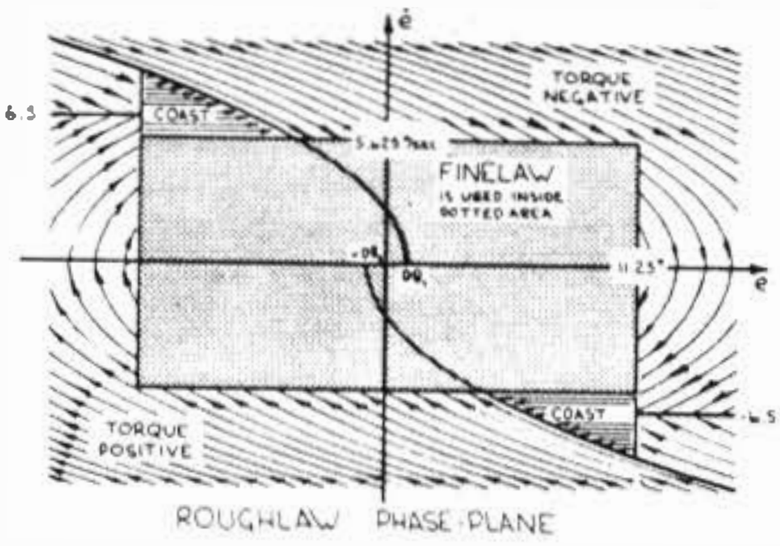

ROUGHLAW PHASE-PLANE

FINELAW

The FINELAW phase-plane logic is used whenever the phase-plane errors are less than 11.25 degrees and 5.625 degrees/second. The FINELAW phase-plane is configured differently for powered and coasting flight to compensate for offset accelerations caused by the DPS or APS engine not thrusting through the LM center of gravity.

- DRIFTING FLIGHT

  The drifting flight phase-plane is set up to achieve a minimum impulse limit cycle. When the phase-plane errors are in the minimum impulse zone, a 14-millisecond jet firing will be commanded. This should be sufficient to reverse the sign on ė and cause the spacecraft to drift back to the other deadband.

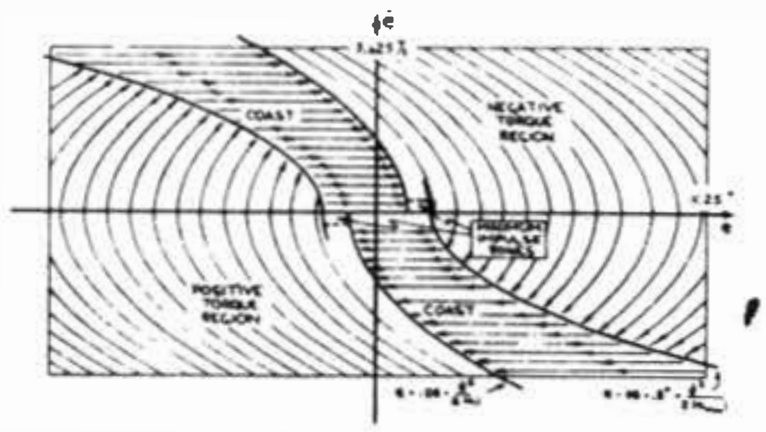

FINELAW PHASE PLANE
DRIFTING FLIGHT

- POWERED FLIGHT

  When the DPS trim gimbal system is operating during powered flight, the offset accelerations (AOS) will be nulled and the phase-plane looks like the drifting flight phase-plane except that the minimum impulse zones are eliminated. When the gimbal trim system (GTS) is not in operation or when AOS is too large to be nulled within 2 seconds, the phase-plane logic is set up according to the magnitude of AOS as shown below. The switching curves are then established based on AOS (disturbing acceleration) A_{MIN} (1.4 degrees/second^2), $A_{NET\ NEG}$ (acceleration due to negative jets + AOS) or $A_{NET\ POS}$ (acceleration due to positive jets + AOS) and the established deadband (DB). The DB is selected as 0.3, 1, or 5 degrees dependent upon the mission programs and the LM astronaut.

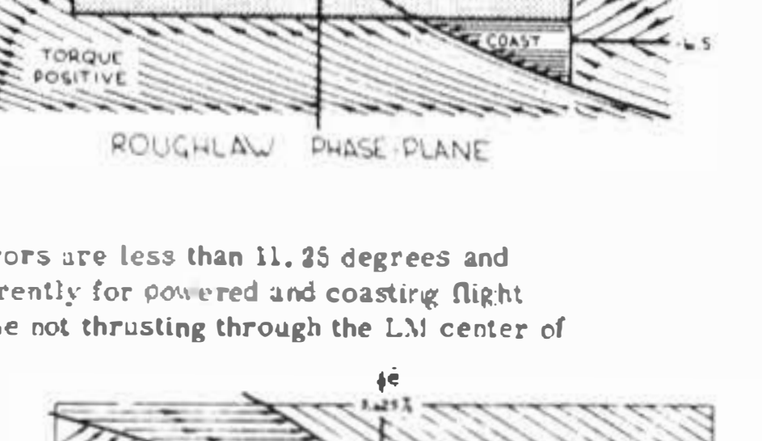

FINELAW PHASE PLANE
POWERED FLIGHT (WHEN GTS IS ALLOWED)

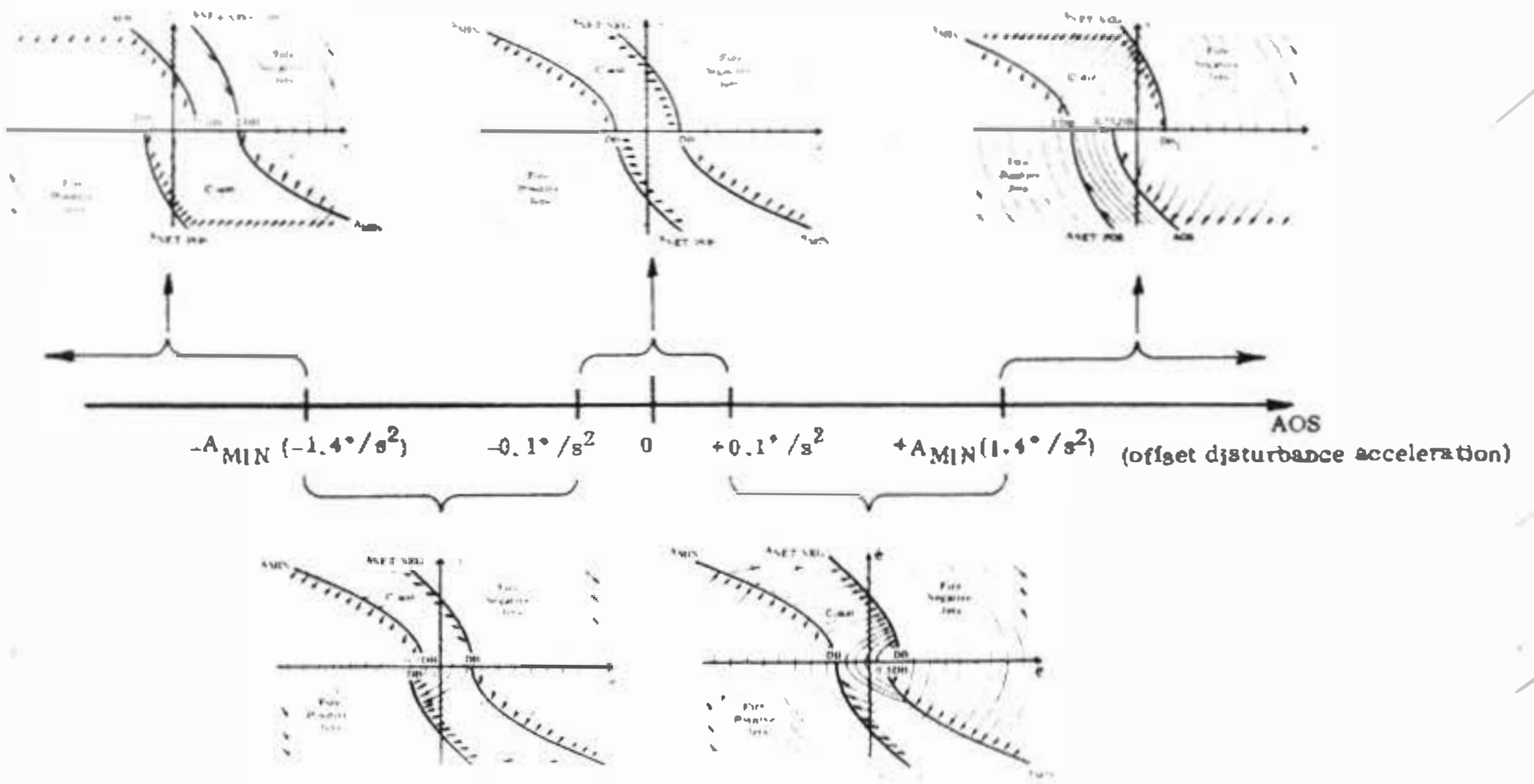

LM/CSM DOCKED PHASE-PLANE

The purpose of the LM/CSM Docked autopilot is to provide backup attitude control of the docked configuration during drifting flight and docked DPS burns. Since this is a backup autopilot, simplicity is stressed rather than performance. Simplicity is achieved as follows.

- The same RCS phase-plane is used for all three control axes.
- Only two-jet thrusting is allowed for each axis.
- Jets are turned on or off at control sample intervals rather than computing the thrusting time required to reach the target switching point.
- The target switching parabolas are replaced by straight line segments.

The design objectives of the simplified autopilot are to:

- Enable low rate attitude maneuvers or attitude hold during drifting flight.
- Enable RCS attitude control in conjunction with the GTS (Gimbal Trim System) during docked DPS burns.
- Reduce the probability of bending mode excitation in excess of docking-tunnel load criteria.
- Perform the above tasks assuming that the number of jet firings and RCS fuel usage are noncritical.

PHASE-PLANE MECHANIZATION

In order to achieve the above design objectives the LM/CSM Docked phase-plane employs rate-limiting, target rates, and jet inhibition logic in addition to the normal phase-plane logic.

RATE LIMITING

Rate limiting is incorporated to prevent the RCS jets from causing attitude rate errors exceeding 1.125 degrees/second. This number was chosen to allow the heaviest configuration to reach a limit cycle with zero overshoots.

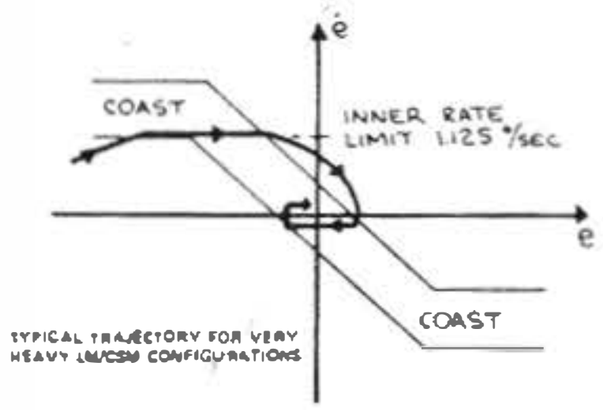

TARGET RATES

Target rates of +0.1 degree/second for positive thrusting and -0.1 degree/second for negative thrusting are incorporated during powered flight. (Target rate = 0 for drifting flight) This allows a steady state limit cycle to be reached in minimum time by bypassing the phase-plane logic when the jets are on and thrusting toward the target rate.

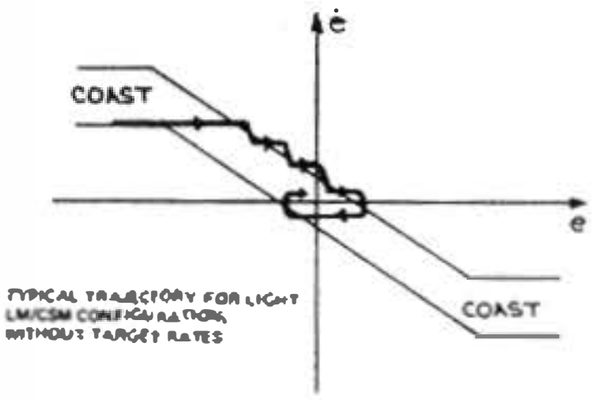

JET INHIBIT LOGIC

Jet inhibition logic operates to reduce bending mode excitation by preventing jet commands from reversing sign at a rapid rate. That is, if the jets are firing negative and the phase plane logic calls for positive jets, then the jet inhibition logic turns the jets off for a period of 1 second (0.4 second for the pitch axis) before they can be turned on again.

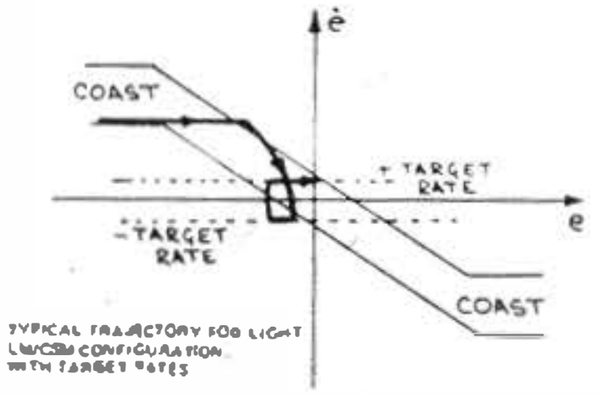

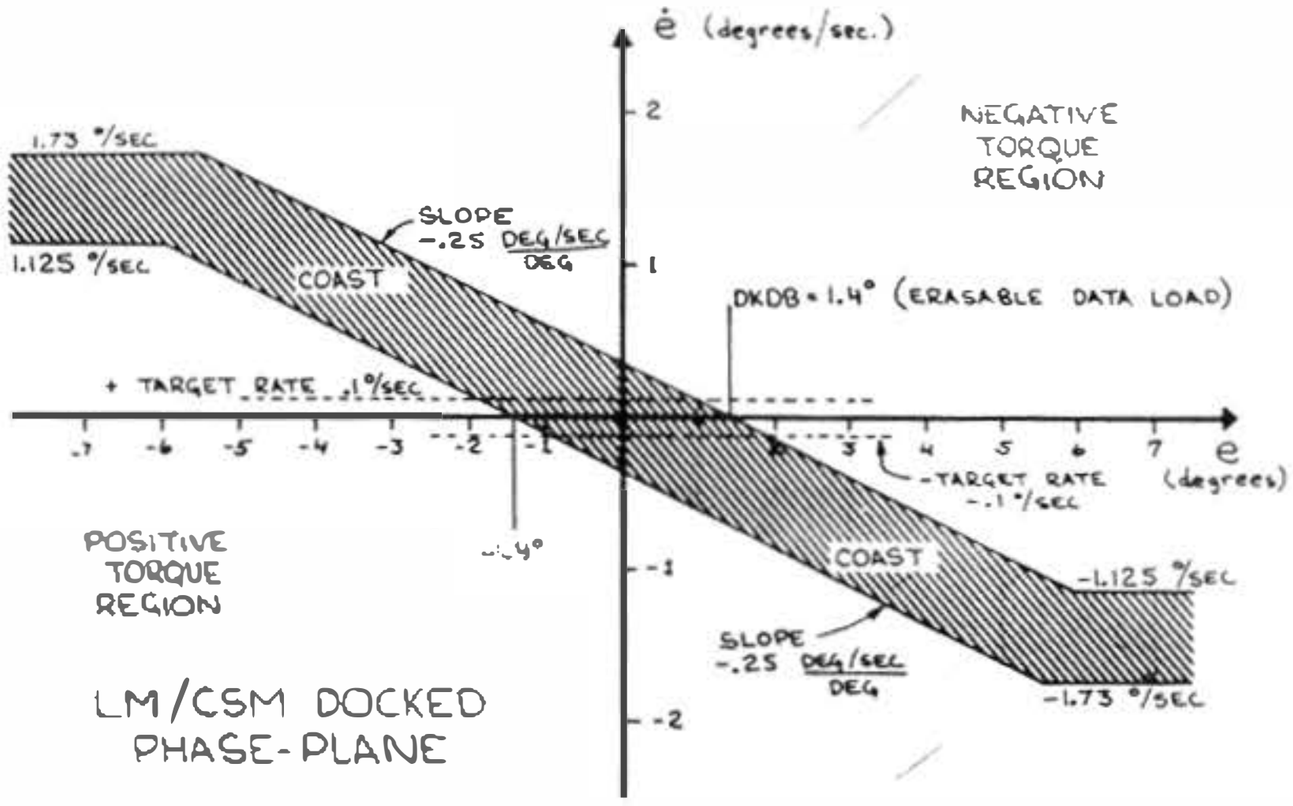

LM/CSM DOCKED PHASE-PLANE

GTS ATTITUDE CONTROL SYSTEM

The Descent Propulsion System (DPS) engine is mounted on gimbals so that it can rotate about the LM pitch and roll axes thereby aligning the thrust vector with the LM center of gravity. This feature can be used for attitude control if the attitude error and error rates are small.

GIMBAL TRIM SYSTEM MECHANIZATION

The Gimbal Trim System (GTS) is controlled by the LGC which issues on/off commands. The GTS responds to these commands by rotating the DPS engine about its hinge pin at a constant rate, R. The resulting deflection of the DPS engine produces an offset torque on the LM which can be used as the control acceleration. The relationship between this angular acceleration and DPS engine deflection is given by Equation 1.

$$\ddot{\theta} = \frac{T}{I} = \frac{FL\delta}{I} \qquad (1)$$

where

$\ddot{\theta}$ = spacecraft angular acceleration
I = spacecraft moment of inertia
T = torque due to DPS engine gimbaling
= FL sin δ ≈ FLδ (small angle approximation)
F = DPS engine thrust
L = trim gimbal hinge pin to center of gravity distance
δ = gimbal deflection

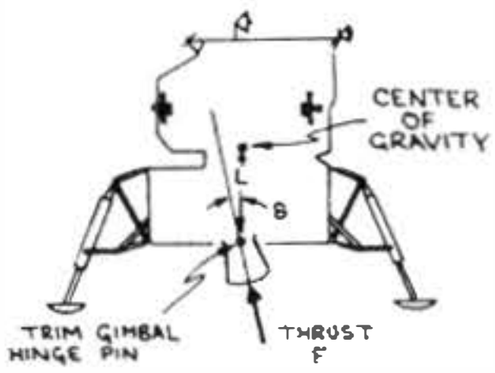

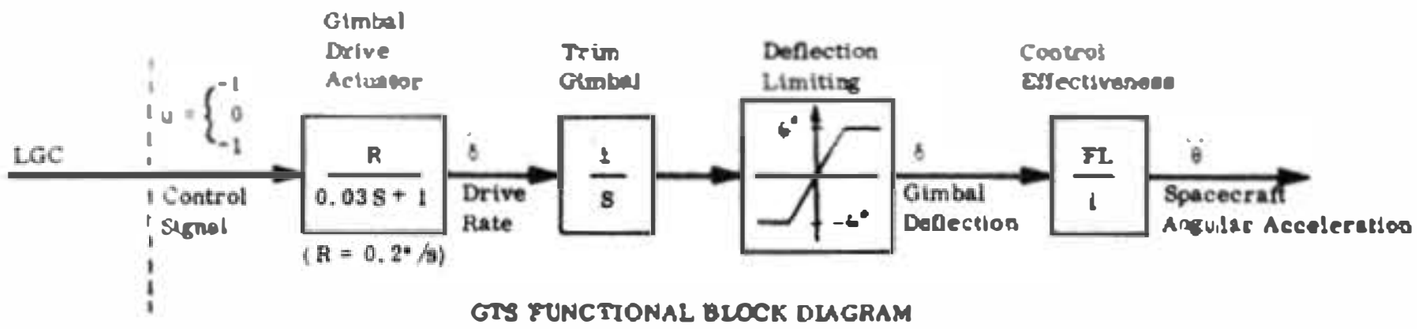

GTS FUNCTIONAL BLOCK DIAGRAM

GTS CONTROL LAW

The GTS control law has two modes of operation: Acceleration Nulling and Attitude Control.

ACCELERATION NULLING MODE

The Acceleration Nulling mode is used when the RCS phase-plane errors lie outside the coast zone and the RCS jets are therefore controlling attitude. In this mode, a drive time is computed to drive the trim gimbal so that the thrust vector is aligned with the LM center of gravity.

$$T = 0.4\,FLR\,\dot{\theta}$$

where

T = drive time duration
FLR = control effectiveness
0.4 = gain factor used to prevent overshoots in the control law.

ATTITUDE CONTROL MODE

The Attitude Control mode uses a "time-optimal" control law to control spacecraft attitude, attitude rate, and angular acceleration. The time-optimal control law was chosen for two reasons:

1. Fuel cost of the control effort is negligible because the DPS engine is on and thrusting and the electrical power required to drive the gimbal is very small.
2. Response time is an important consideration because of the fixed, slow (0.2 degree/second) gimbal drive rate.

The time-optimal control law is a three-dimensional phase-plane type controller designed to drive attitude error (e) and its first two derivatives ($\dot{e}$ and $\ddot{e}$) to zero simultaneously. The control law defines a switching surface and issues positive drive commands when the errors are on one side of the surface and negative drive commands on the other side of the surface. Control loop sampling rates and GDA flatime delays act to produce error limit cycles with high amplitudes and slow settle-out time. To compensate for this, a control effectiveness gain of 0.3 is introduced thereby modifying the switching surface.

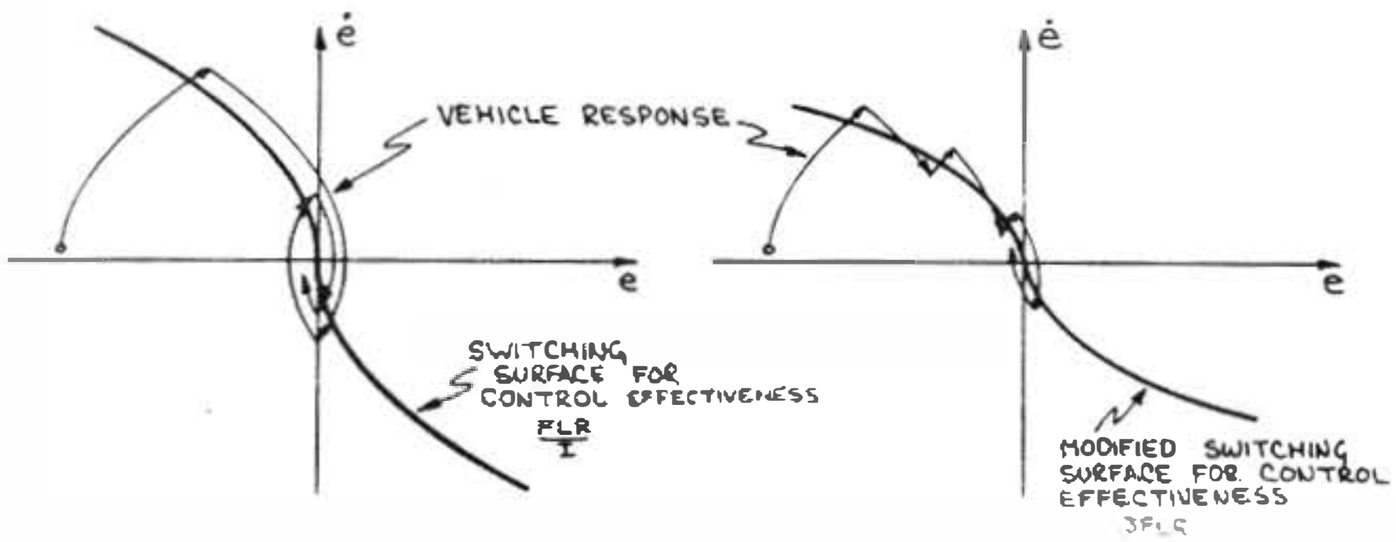

STATE ESTIMATOR

The purpose of the State Estimator is to compute spacecraft attitude, attitude rate, and angular acceleration based on the attitude information obtained from the CDU. The problem then is to estimate the state vector based on noisy measurements of one element of the state vector. The solution of the problem is patterned after Kalman filtering and uses a recursive filter with gains based on engineering considerations rather than statistical optimization.

STATE EQUATION (Continuous System)

$$\dot{\underline{x}}(t) = [A(t)]\,\underline{x}(t) + [B(t)]\,\underline{u}(t) + \underline{m}(t) \qquad (1)$$

$$\begin{bmatrix}\dot{\theta}(t)\\ \dot{\omega}(t)\\ \dot{\alpha}(t)\end{bmatrix} = \begin{bmatrix}0 & 1 & 0\\ 0 & 0 & 1\\ 0 & 0 & 0\end{bmatrix}\begin{bmatrix}\theta(t)\\ \omega(t)\\ \alpha(t)\end{bmatrix} + \begin{bmatrix}0 & 0\\ b_1(t) & 0\\ 0 & 1\end{bmatrix}\begin{bmatrix}u_j\\ u_g\end{bmatrix} + \begin{bmatrix}0\\ 0\\ m_{CG}\end{bmatrix} \qquad (2)$$

$u_j \in u_g$ are assumed constant over control sample interval

$b_1(t) \Rightarrow$

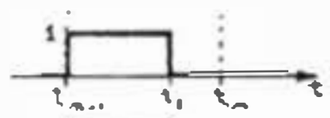

T_{jet} = jet firing time

STATE EQUATION (Discrete System)

$$\underline{x}(t_m) = [\Phi(t_m, t_{m-1})]\,\underline{x}(t_m) + \int_{t_{m-1}}^{t_m}[\Phi(t_m,\tau)]\,[B(\tau)]\,\underline{u}(\tau)\,d\tau + \int_{t_{m-1}}^{t_m}[\Phi(t_m,\tau)]\,\underline{m}(\tau)\,d\tau \qquad (3)$$

Or:

$$\underline{x}_m = [\Phi_{m-1}]\,\underline{x}_{m-1} + [G_{m-1}]\,\underline{u}_{m-1} + \underline{m}_{m-1} \qquad (4)$$

STATE TRANSITION MATRIX

$$[\Phi_{m-1}] = [\Phi(t_m, t_{m-1})] = \begin{bmatrix}1 & t_m - t_{m-1} & (t_m - t_{m-1})^2/2\\ 0 & 1 & t_m - t_{m-1}\\ 0 & 0 & 1\end{bmatrix} = \begin{bmatrix}1 & T & T^2/2\\ 0 & 1 & T\\ 0 & 0 & 1\end{bmatrix} \qquad (5)$$

$T = t_m - t_{m-1}$

DRIVING MATRIX

$$[G_{m-1}] = \int_{t_{m-1}}^{t_m}[\Phi(t_m,\tau)]\,[B(\tau)]\,d\tau = \int_{t_{m-1}}^{t_m}\begin{bmatrix}1 & t_m-\tau & (t_m-\tau)^2/2\\ 0 & 1 & t_m-\tau\\ 0 & 0 & 1\end{bmatrix}\begin{bmatrix}0 & 0\\ b_1(\tau) & 0\\ 0 & 1\end{bmatrix} d\tau \qquad (6)$$

$$= \int_{t_{m-1}}^{t_m}\begin{bmatrix}b_1(\tau)(t_m-\tau) & (t_m-\tau)^2/2\\ b_1(\tau) & t_m-\tau\\ 0 & 1\end{bmatrix} d\tau = \begin{bmatrix}T_{jet}\,(T - T_{jet}/2) & T^2/6\\ T_{jet} & T^2/2\\ 0 & T\end{bmatrix} \qquad (7)$$

MEASUREMENT EQUATION

$$\theta_m = \theta(t_m) + m_{CDU} \qquad (m_{CDU} = \text{measurement noise, primarily CDU quantizing error}) \qquad (8)$$

NOMENCLATURE

$\underline{x}(t)$	=	state vector
$\underline{u}(t)$	=	control or driving vector
$\underline{m}(t)$	=	process noise vector
$\theta(t)$	=	spacecraft attitude
$\omega(t)$	=	spacecraft attitude rate
$\alpha(t)$	=	spacecraft angular acceleration
u_j	=	angular acceleration due to RCS jets
u_g	=	rate of change of angular acceleration due to GTS
m_{CG}	=	spacecraft disturbance due to CG movement, nozzle erosion, propellent slosh, and so on
θ_m	=	measured spacecraft attitude
t_n, t_{n-1}	=	time of present and past state vector estimates, respectively
T	=	control sample interval
T_{jet}	=	duration of RCS jet firing

STATE ESTIMATOR (Cont)

STATE ESTIMATOR MECHANIZATION

The State Estimator is mechanized as a two-part process: State Vector Extrapolation and State Vector Updating.

State Vector Extrapolation

The state vector is extrapolated using Equation 4 where the state transition matrix $[\Phi_{n-1}]$ is defined in Equation 5 and the driving matrix $[G_{n-1}]$ in Equation 7. The process noise is assumed to be random with zero mean so that the best estimate of its effect on the state vector is zero.

$$\theta'_m = \hat{\theta}_{m-1} + T\hat{\omega}_{m-1} + T^2/2\,\hat{\alpha}_{m-1} + T_{jet}(T - T_{jet}/2)u_j + T^3/6\,u_G \quad (9)$$

$$\omega'_m = \hat{\omega}_{m-1} + T\hat{\alpha}_{m-1} + T_{jet}u_j + T^2/2\,u_G \quad (10)$$

$$\alpha'_m = \hat{\alpha}_{m-1} + Tu_G \quad (11)$$

State Vector Updating

The state vector is updated based on the weighting functions and the measurement residual

$$\hat{\theta}_m = \theta'_m + K_\theta(\theta_m - \theta'_m) \quad (12)$$

$$\hat{\omega}_m = \omega'_m + K\omega/T(\theta_m - \theta'_m) \quad (13)$$

$$\hat{\alpha}_m = \alpha'_m + K\alpha/T^2(\theta_m - \theta'_m) \quad (14)$$

The measurement residual is the difference between the actual measurement, θ_m, and the expected measurement, θ'_m. The expected measurement is equal to the extrapolated estimate of spacecraft attitude, because the measurement noise, n_{CDU}, is assumed to be random with zero mean and the best estimate of its effect on the measurement is therefore zero.

The weighting functions use a threshold logic to filter out CDU quantizing noise. This means that if the measurement residual is less than a preselected threshold, the weighting function is zero and the measurement residual is ignored. When the measurement residual is above the threshold, the gain is not zero and the measurement residual is used to update the state vector. In other words, small variations between the measured and expected attitudes are assumed to be due to CDU quantizing and large variations due to spacecraft maneuvering.

The weighting functions also vary as function of the time since the measurement residual last exceeded the threshold level.

Weighting Functions

Attitude Gain

for $|\theta_m - \theta'_m| \le \theta_{max}$: $K_\theta = 0$

for $|\theta_m - \theta'_m| > \theta_{max}$: $K_\theta = 1$

Attitude Rate Gain

for $|\theta_m - \theta'_m| \le \theta_{max}$: $K_\omega = 0$

for $|\theta_m - \theta'_m| > \theta_{max}$:

$$K_\omega = \frac{1}{m_t + N_\omega}$$

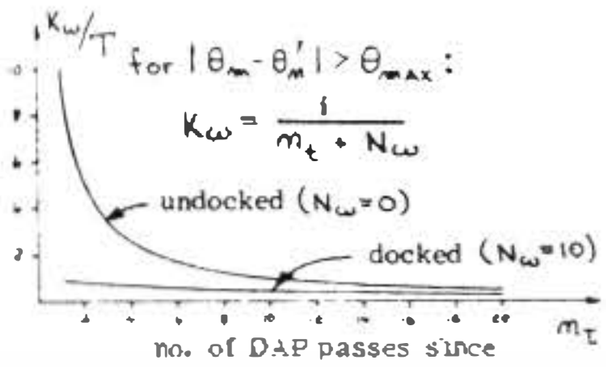

no. of DAP passes since threshold was last exceeded

Angular Acceleration Gain

for $|\theta_m - \theta'_m| \le \theta_{max}$: $K_\alpha = 0$

for $|\theta_m - \theta'_m| > \theta_{max}$:

$$K_\alpha = \frac{K\omega}{m_t + N_\omega + N_\alpha}$$

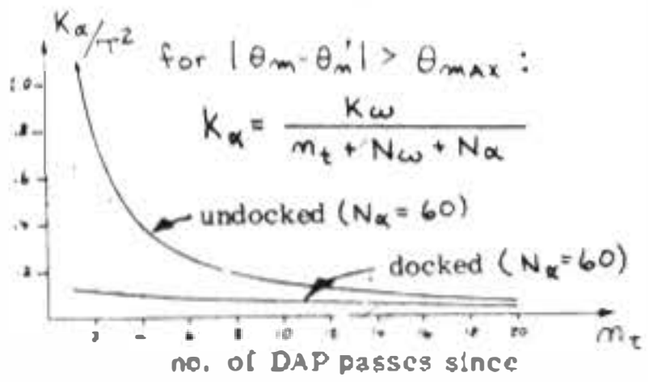

no. of DAP passes since threshold was last exceeded

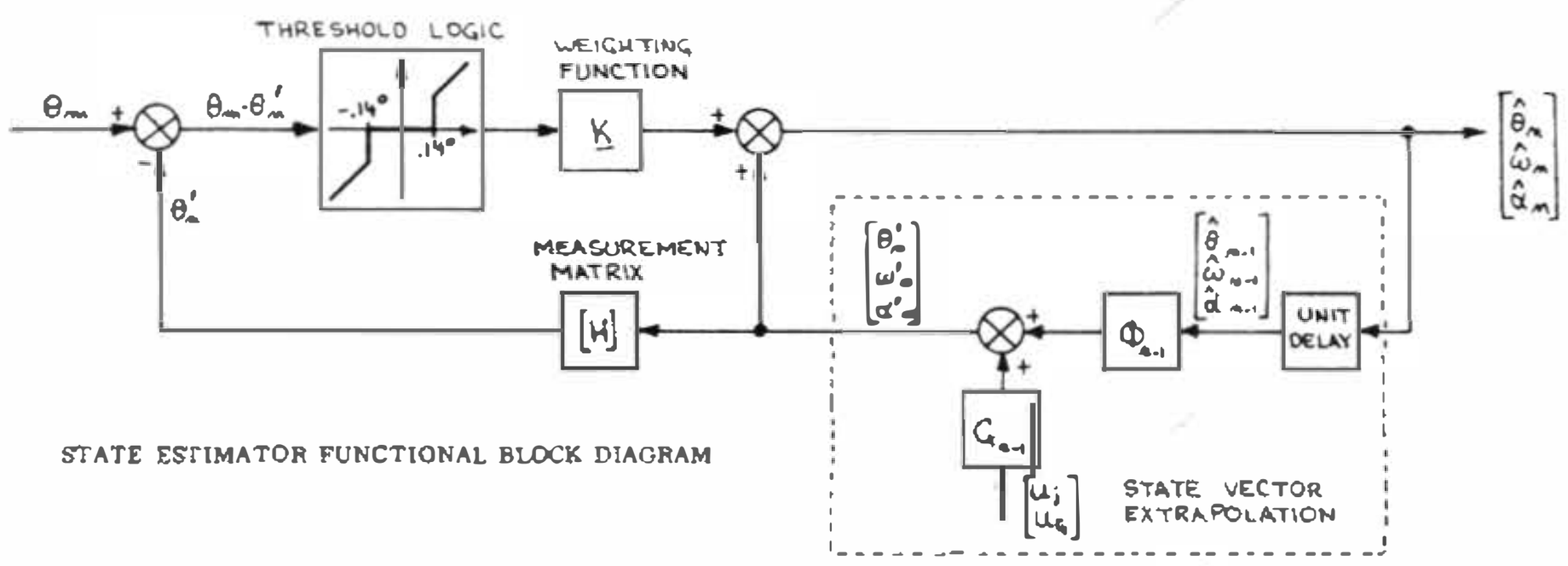

STATE ESTIMATOR FUNCTIONAL BLOCK DIAGRAM

I/ACCS ROUTINE

The I/ACCS routine is scheduled by Servicer every 2 seconds during powered flight. The purpose of the I/ACCS routine is to compute accelerations due to R S jet firings, vehicle moments of inertia, and the vehicle center of gravity as functions of vehicle mass. The mass of the vehicle is computed by Servicer every 2 seconds to account for fuel consumed by the main thrusting engine. The mass computation is performed according to Equation 1 based on velocity changes measured by the PIPA's.

$$m(t_n) = m(t_{n-1})\left(1 - \frac{\Delta V}{V_e}\right) \qquad (1)$$

where

$m(t_n)$ = vehicle mass at current time, t_n.

$m(t_{n-1})$ = vehicle mass at last time increment.

ΔV = change in velocity as measured by the PIPA's between times t_{n-1} and t_n.

V_e = exhaust velocity constant

V_e(DPS) = 2,956.889 meters/second

V_e(APS) = 3,030 meters/second

V_e(RCS) = V_e(DPS) or V_e(APS)

The functions used by I/ACCS to compute jet accelerations, moments of inertia, and center-of-gravity location are given below

RCS Jet Accelerations

One-jet accelerations are computed as hyperbolic functions of vehicle mass.

$$a_j = \frac{a}{m+c} + b$$

where

m = mass of vehicle (Equation 1 above,
a, b, c = constants

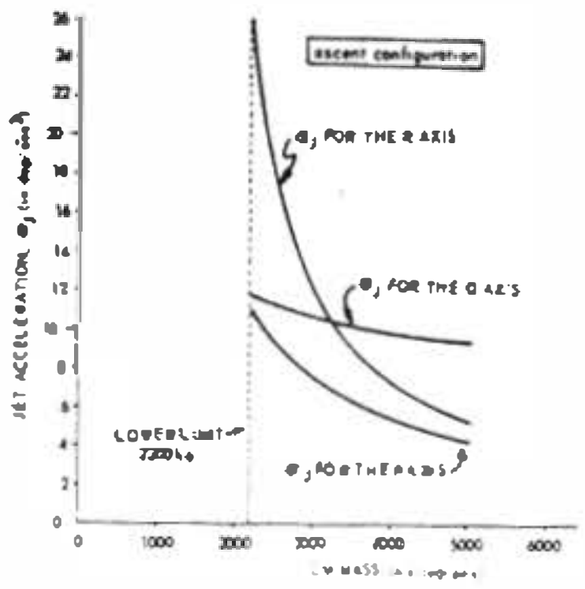

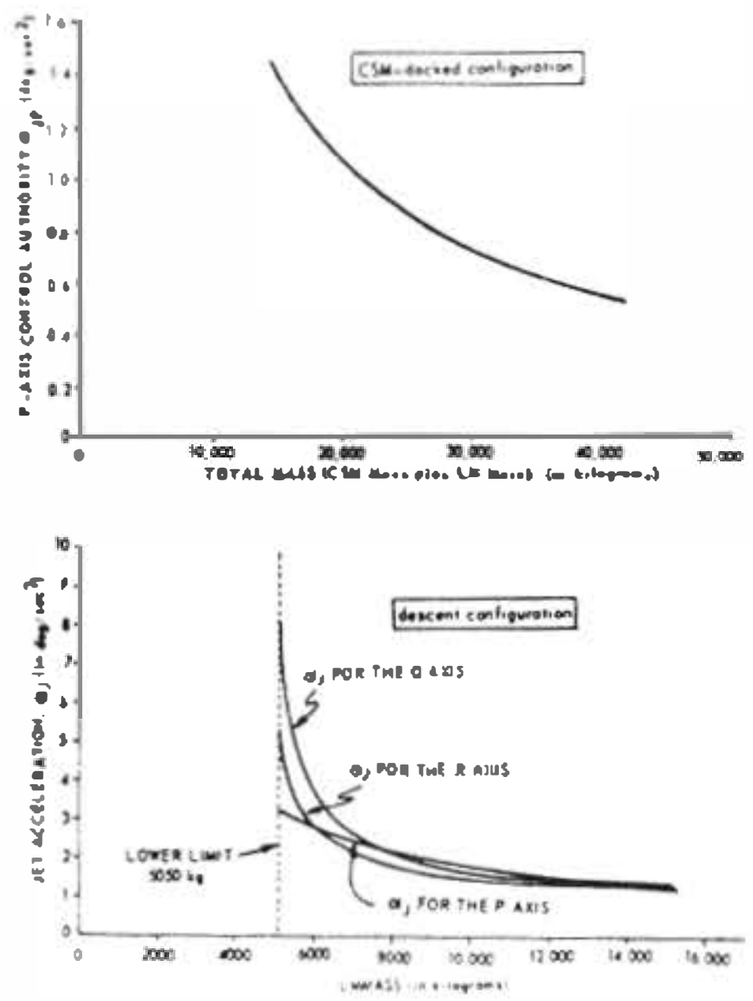

Vehicle Moment of Inertia

One-jet accelerations for the pitch and roll axes in the CSM/LM docked configuration are computed according to $\alpha_j = T/I$. The torque, T, is assumed constant and the inertia, I, is computed as a quadratic function of the LM mass and the CSM mass.

$$I = ax^2 + by^2 + cxy + dx + ey + f$$

where

I = moment of inertia about pitch or roll axes
x = CSM mass
y = LM mass
a, b, c, d, e, f = constants

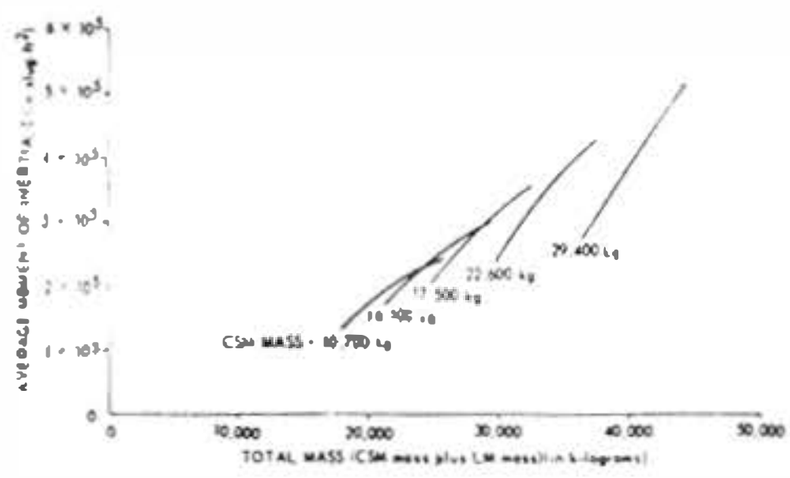

Hinge Pin to Center of Gravity Distance

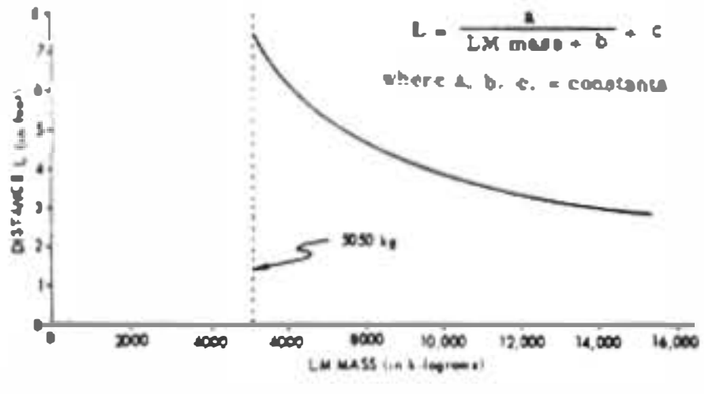

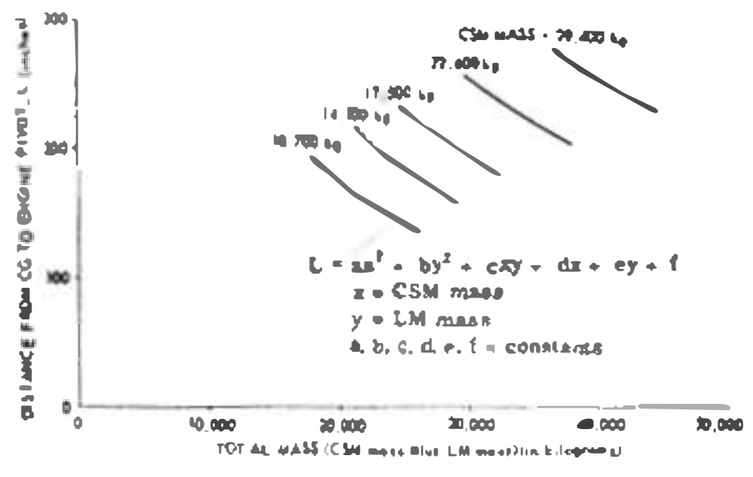

LUNAR LANDING
GUIDANCE & NAVIGATION

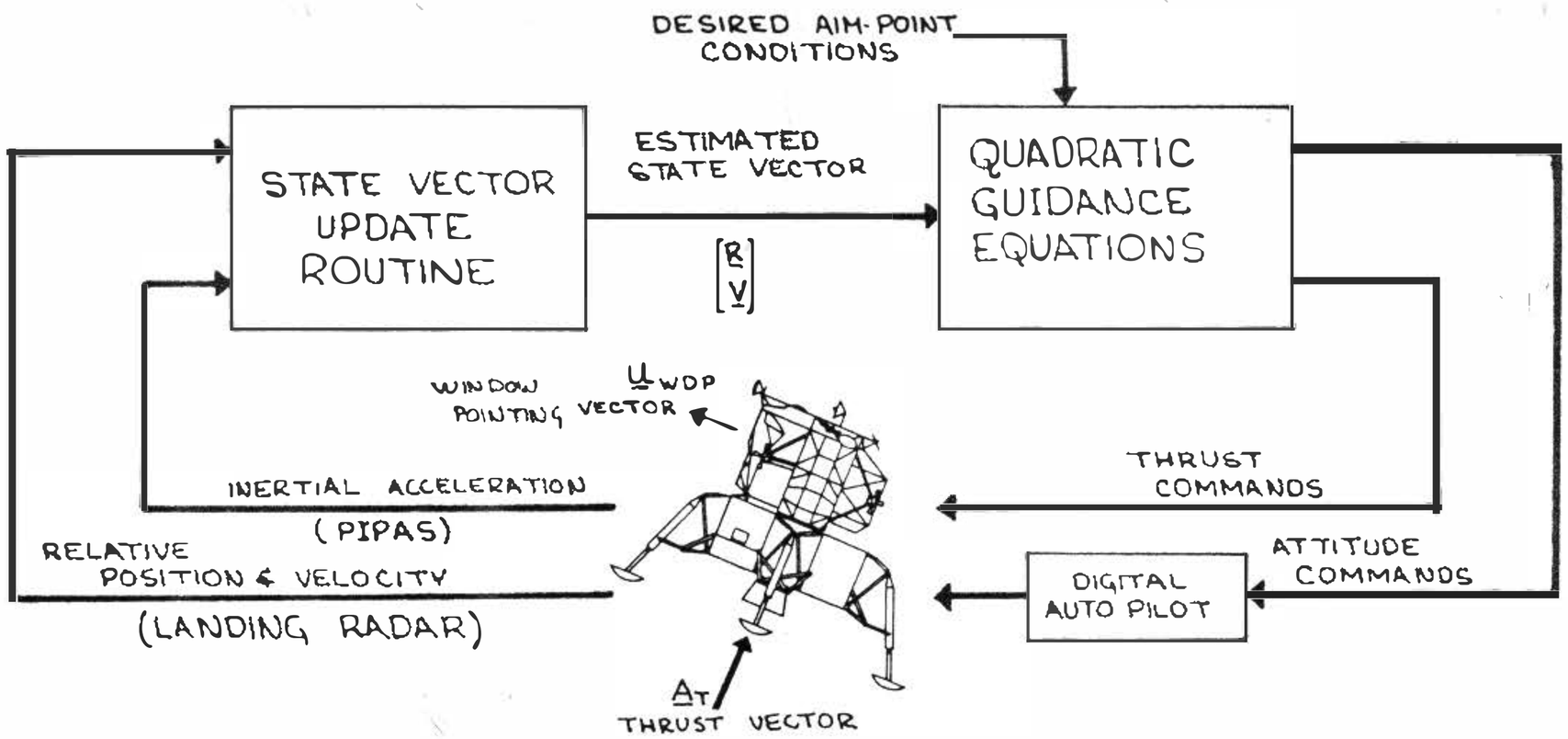

LUNAR LANDING NAVIGATION

NAVIGATION IS PERFORMED BY THE STATE VECTOR UPDATE ROUTINE WHICH USES A MODIFIED KALMAN FILTER TO ESTIMATE THE VEHICLE STATE VECTOR BASED ON PIPA & LANDING RADAR MEASUREMENTS.

LUNAR LANDING GUIDANCE

THE QUADRATIC GUIDANCE EQUATIONS GENERATE THRUST & ATTITUDE COMMANDS BASED ON THE PRESENT VEHICLE STATE VECTOR AND THE DESIRED AIM POINT CONDITIONS. THE THRUST & ATTITUDE COMMANDS ARE EXECUTED BY THE SPACECRAFT TO ACHIEVE THE DESIRED TRAJECTORY.

PRIMARY CONSTRAINTS ON LUNAR LANDING

THE TERMINAL POINT IS CONSTRAINED IN POSITION AND VELOCITY

$\underline{r}(t_f) = R_{LS}$ (LANDING SITE)
$\underline{v}(t_f) \approx 0$ (SOFT LANDING)

THE INITIAL POINT IS CONSTRAINED IN POSITION AND VELOCITY

$\underline{r}(t_0) = \underline{r}_0$ - PRESENT POSITION
$\underline{v}(t_0) = \underline{v}_0$ - PRESENT VELOCITY

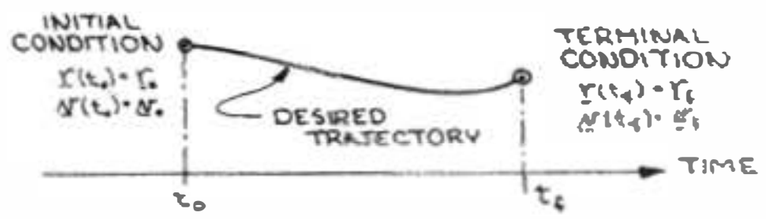

BASIC GUIDANCE SCHEME

EXPRESS LEM POSITION AS A TAYLOR SERIES IN TIME EXPANDED ABOUT THE TERMINAL TIME t_f.

$$\underline{r}(t) = \underline{r}(t_f) + \dot{\underline{r}}(t_f)(t-t_f) + \ddot{\underline{r}}(t_f)\frac{(t-t_f)^2}{2} + \dots$$
$$= \underline{r}(t_f) + \underline{v}(t_f)(t-t_f) + \underline{a}(t_f)\frac{(t-t_f)^2}{2} + \dots$$

EXPRESS VELOCITY AND ACCELERATION AS THE FIRST AND SECOND DERIVATIVES OF POSITION.

$$\underline{v}(t) = \underline{v}(t_f) + \underline{a}(t_f)(t-t_f) + \underline{j}(t_f)\frac{(t-t_f)^2}{2} + \dots$$
$$\underline{a}(t) = \underline{a}(t_f) + \underline{j}(t_f)(t-t_f) + \dots$$

COMPUTE THRUST COMMANDS FROM THE ACCELERATION PROFILE AND GRAVITY.

$$\underline{a}(t_1) = \underline{a}(t_0) + \underline{a}(t_0)(t_1-t_0) + \underline{j}(t_0)(t_1-t_0) + \dots$$
$$\text{THRUST}(t_1) = \underline{a}_T(t_1) = \underline{a}(t_1) - \underline{g}(t_1)$$

CAPABILITY OF THE BASIC GUIDANCE SCHEME

THE FORM OF THE ACCELERATION PROFILE IS DETERMINED BY THE NUMBER OF TERMS INCLUDED IN THE TAYLOR SERIES EXPANSION OF $\underline{r}(t)$.

ORDER OF EXPANSION	N = 2	N = 3	N = 4
POSITION EQUATION	$\underline{r}(t) = \underline{r}_f + \underline{v}_f(t-t_f) + \underline{a}_f\frac{(t-t_f)^2}{2}$	$\underline{r}(t) = \underline{r}_f + \underline{v}_f(t-t_f) + \underline{a}_f\frac{(t-t_f)^2}{2} + \underline{j}_f\frac{(t-t_f)^3}{6}$	$\underline{r}(t) = \underline{r}_f + \underline{v}_f(t-t_f) + \underline{a}_f\frac{(t-t_f)^2}{2} + \underline{j}_f\frac{(t-t_f)^3}{6} + \underline{s}_f\frac{(t-t_f)^4}{24}$
VELOCITY EQUATION	$\underline{v}(t) = \underline{v}_f + \underline{a}_f(t-t_f)$	$\underline{v}(t) = \underline{v}_f + \underline{a}_f(t-t_f) + \underline{j}_f\frac{(t-t_f)^2}{2}$	$\underline{v}(t) = \underline{v}_f + \underline{a}_f(t-t_f) + \underline{j}_f\frac{(t-t_f)^2}{2} + \underline{s}_f\frac{(t-t_f)^3}{6}$
ACCELERATION PROFILE	$\underline{a}(t) = \underline{a}_f$	$\underline{a}(t) = \underline{a}_f + \underline{j}_f(t-t_f)$	$\underline{a}(t) = \underline{a}_f + \underline{j}_f(t-t_f) + \underline{s}_f\frac{(t-t_f)^2}{2}$

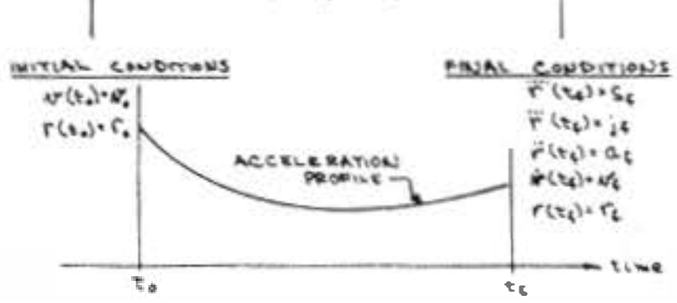

EFFECT OF INITIAL CONSTRAINTS ON THE ACCELERATION PROFILE

	N = 2	N = 3	N = 4
POSITION CONSTRAINT $\underline{r}(t_0) = \underline{r}_0$; $T_{go} = t_0 - t_f$	$\underline{a}_f = \left[(\underline{r}_0 - \underline{r}_f) - \underline{v}_f T_{go}\right]\frac{2}{T_{go}^2}$	$\underline{a}_f = \left[(\underline{r}_0 - \underline{r}_f) - \underline{v}_f T_{go} - \underline{j}_f\frac{T_{go}^3}{6}\right]\frac{2}{T_{go}^2}$	$\underline{a}_f = \left[(\underline{r}_0 - \underline{r}_f) - \underline{v}_f T_{go} - \underline{j}_f\frac{T_{go}^3}{6} - \underline{s}_f\frac{T_{go}^4}{24}\right]\frac{2}{T_{go}^2}$
VELOCITY CONSTRAINT $\underline{v}(t_0) = \underline{v}_0$; $T_{go} = t_0 - t_f$	$\underline{a}_f = (\underline{v}_0 - \underline{v}_f)\frac{1}{T_{go}}$	$\underline{a}_f = \left[(\underline{v}_0 - \underline{v}_f) - \underline{j}_f\frac{T_{go}^2}{2}\right]\frac{1}{T_{go}}$	$\underline{a}_f = \left[(\underline{v}_0 - \underline{v}_f) - \underline{j}_f\frac{T_{go}^2}{2} - \underline{s}_f\frac{T_{go}^3}{6}\right]\frac{1}{T_{go}}$
	2 EQUATIONS / 2 UNKNOWNS $\underline{a}_f$, T_{go}	2 EQUATIONS / 3 UNKNOWNS $\underline{a}_f$, $\underline{j}_f$, T_{go}	2 EQUATIONS / 4 UNKNOWNS $\underline{a}_f$, $\underline{j}_f$, $\underline{s}_f$, T_{go}
COMMENTS :	$\underline{a}_f$ & T_{go} ARE UNIQUELY DETERMINED BY INITIAL CONSTRAINTS	— 1 DEGREE of FREEDOM — $\underline{j}_f$ CAN BE PRESPECIFIED, THEN $\underline{a}_f$ & T_{go} ARE UNIQUELY DETERMINED	— 2 DEGREES of FREEDOM — $\underline{a}_f$ & $\underline{j}_f$ CAN BE PRESPECIFIED, THEN $\underline{s}_f$ & T_{go} ARE UNIQUELY DETERMINED.

SECONDARY CONSTRAINTS OF LUNAR LANDING

- REACH TERMINAL CONDITIONS WITH HIGH ACCURACY
- VERTICAL DESCENT FOR LAST 200 ft. AT A RATE OF -5 ft/SEC.
- LANDING SITE VISIBILITY FOR 200 SEC. BEFORE TOUCHDOWN

MODIFICATIONS TO BASIC GUIDANCE SCHEME

THE FOLLOWING MODIFICATIONS WERE MADE TO THE BASIC QUADRATIC GUIDANCE SCHEME IN ORDER TO ACHIEVE THE SECONDARY CONSTRAINTS OF LUNAR LANDING

- THE DESIRED TRAJECTOR IS REDEFINED ON EVERY ITERATION CYCLE (2 SEC.) SUCH THAT THE INITIAL CONDITIONS ($\underline{r}(t_0), \underline{v}(t_0)$) ARE THE CURRENT BEST ESTIMATE OF VEHICLE STATE AS DETERMINED BY THE STATE VECTOR UPDATE ROUTINE. THIS ENABLES PIN-POINT ACCURACY BY ELIMINATING CUMULATIVE ERRORS IN THE IMPLEMENTATION OF THE BASIC SCHEME.
- THE LANDING SEQUENCE IS DIVIDED INTO THREE PHASES EACH WITH ITS OWN FINAL CONDITIONS OR AIM POINTS.

1. BRAKING PHASE
   THIS PHASE BRAKES THE LEM DOWN FROM ORBITAL VELOCITY AND IS TARGETED SUCH THAT THE LANDING SITE VISIBILITY CONSTRAINTS CAN BE MET DURING THE VISIBILITY PHASE.

2. VISIBILITY PHASE (APPROACH PHASE)
   THIS PHASE IS FLOWN WITH THE LEM ORIENTED SUCH THAT THE LANDING SITE IS VISIBLE FOR LANDING SITE RE-DESIGNATION. TARGETING IS CHOSEN TO YIELD THE PROPER INITIAL CONDITIONS FOR VERTICAL DESCENT CONSISTENT WITH THE VISIBILITY CONSTRAINTS.

3. VERTICAL DESCENT PHASE
   THIS PHASE REDUCES THE SPACECRAFT HORIZONTAL VELOCITY TO ZERO AND VERTICAL VELOCITY TO -3 ft/SEC.. QUADRATIC GUIDANCE IS NOT USED.

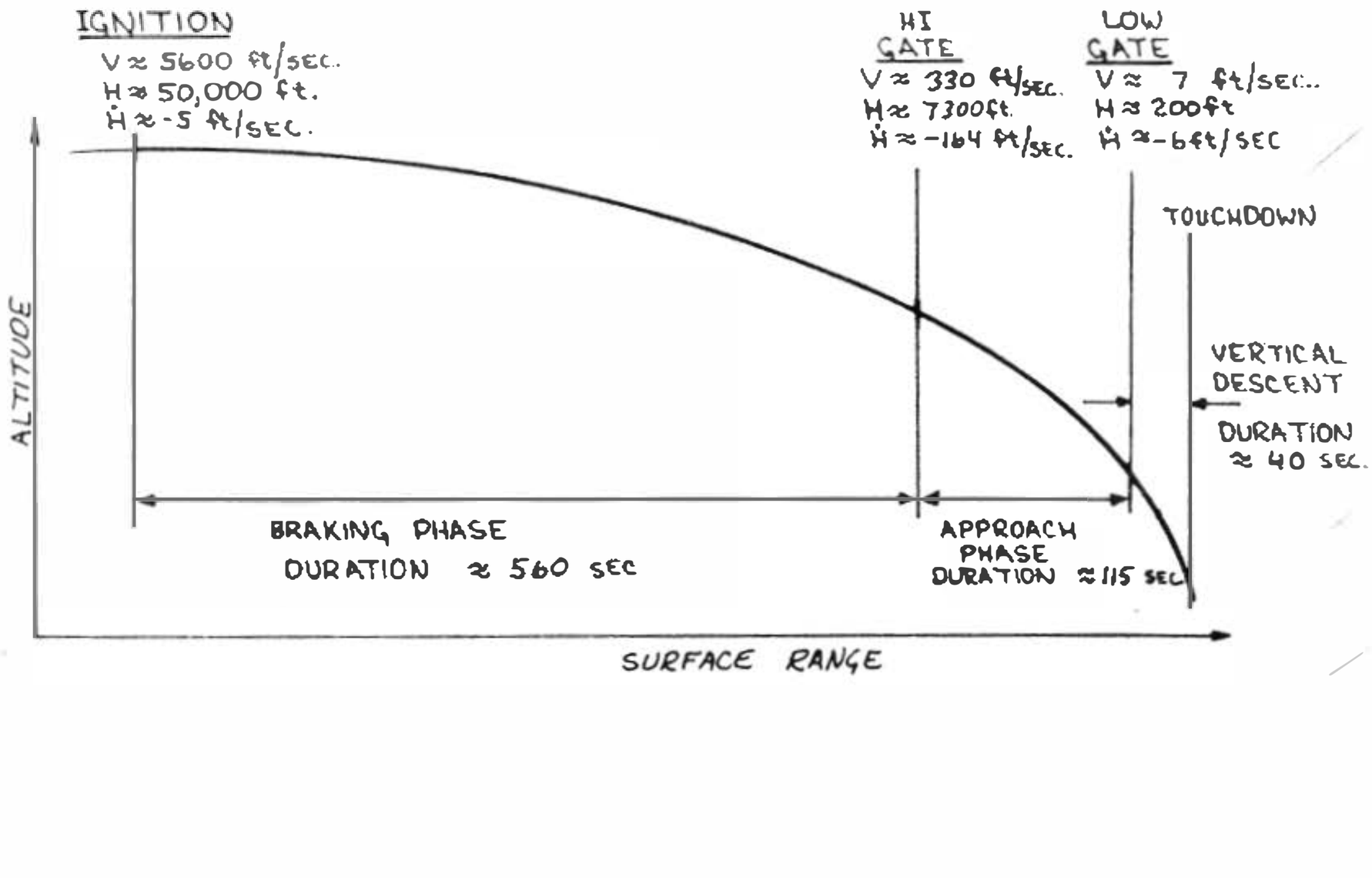

DERIVATION OF QUADRATIC GUIDANCE LAW

EXPRESS THE POSITION, VELOCITY & ACCELERATION EQUATIONS IN MATRIX FORM

$$\begin{bmatrix} \underline{Q}(t) \\ \underline{V}(t) \\ \underline{r}(t) \end{bmatrix} = \left[\begin{array}{cc:ccc} T_{go}^2/2 & T_{go} & 1 & 0 & 0 \\ \hdashline T_{go}^3/6 & T_{go}^2/2 & T_{go} & 1 & 0 \\ T_{go}^4/24 & T_{go}^3/6 & T_{go}^2/2 & T_{go} & 1 \end{array}\right] \begin{bmatrix} \underline{S}_f \\ \underline{j}_f \\ \hdashline \underline{Q}_f \\ \underline{V}_f \\ \underline{r}_f \end{bmatrix}$$

WHERE : $T_{go} = t - t_f$

REARRANGE THE MATRIX EQUATION SUCH THAT $\underline{Q}(t)$, $\underline{S}_f$ & $\underline{j}_f$, THE DEPENDANT VARIABLES, ARE EXPRESSED IN TERMS OF $\underline{V}(t)$, $\underline{r}(t)$, $\underline{Q}_f$, $\underline{r}_f$ & $\underline{V}_f$, THE INDEPENDANT VARIABLES.

$$\left[\begin{array}{c:cc} 1 & -T_{go}^2/2 & -T_{go} \\ \hdashline 0 & -T_{go}^3/6 & -T_{go}^2/2 \\ 0 & -T_{go}^4/24 & -T_{go}^3/6 \end{array}\right] \begin{bmatrix} \underline{Q}(t) \\ \hdashline \underline{S}_f \\ \underline{j}_f \end{bmatrix} = \left[\begin{array}{cc:ccc} 0 & 0 & 1 & 0 & 0 \\ -1 & 0 & T_{go} & 1 & 0 \\ 0 & -1 & T_{go}^2/2 & T_{go} & 1 \end{array}\right] \begin{bmatrix} \underline{V}(t) \\ \underline{r}(t) \\ \hdashline \underline{Q}_f \\ \underline{V}_f \\ \underline{r}_f \end{bmatrix}$$

$$\begin{bmatrix} A \\ B \end{bmatrix} = \begin{bmatrix} C & D \\ E & F \end{bmatrix} \begin{bmatrix} G \\ H \end{bmatrix}$$

$A = CG + DH$
$B = EG + FH$

$A - CG = DH$
$-EG = -B + FH$

$$\begin{bmatrix} I & -C \\ 0 & -E \end{bmatrix} \begin{bmatrix} A \\ G \end{bmatrix} = \begin{bmatrix} 0 & D \\ -I & F \end{bmatrix} \begin{bmatrix} B \\ H \end{bmatrix}$$

SOLVE THE ABOVE EQUATION FOR $\underline{Q}(t)$, $\underline{S}_f$, $\underline{j}_f$.

$$\begin{bmatrix} \underline{Q}(t) \\ \underline{S}_f \\ \underline{j}_f \end{bmatrix} = \begin{bmatrix} 6/T_{go} & -12/T_{go}^2 & 1 & 6/T_{go} & 12/T_{go}^2 \\ 24/T_{go}^3 & -72/T_{go}^4 & 12/T_{go}^2 & 48/T_{go}^3 & 72/T_{go}^4 \\ -6/T_{go}^2 & 24/T_{go}^3 & -6/T_{go} & -18/T_{go}^2 & -24/T_{go}^3 \end{bmatrix} \begin{bmatrix} \underline{V}(t) \\ \underline{r}(t) \\ \underline{Q}_f \\ \underline{V}_f \\ \underline{r}_f \end{bmatrix}$$

$[x] \underline{A} = [Y] \underline{B}$

$\underline{A} = [x]^{-1} [Y] \underline{B}$

QUADRATIC ACCELERATION EQUATION

$$\underline{Q}(t) = \underline{Q}_f + \underline{j}_f (t - t_f) + \underline{S}_f \frac{(t - t_f)^2}{2}$$

WHERE :

$$\underline{j}_f = -\frac{24}{T_{go}^3}(\underline{r}_f - \underline{r}_0) - \frac{6}{T_{go}^2}(\underline{V}_0 + 3\underline{V}_f) - \frac{6}{T_{go}}\underline{Q}_f$$

$$\underline{S}_f = \frac{72}{T_{go}^4}(\underline{r}_f - \underline{r}_0) + \frac{24}{T_{go}^3}(\underline{V}_0 + 2\underline{V}_f) + \frac{12}{T_{go}^2}\underline{Q}_f$$

LEADTIME COMPENSATION

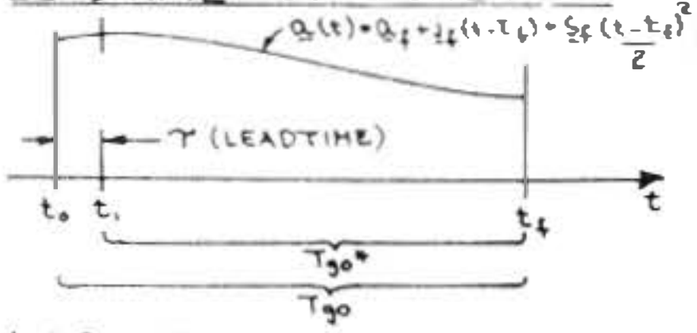

$\underline{j}_f$ & $\underline{S}_f$ ARE EVALUATED AT t_0. $\underline{Q}(t)$ IS EVALUATED A t_1 TO YIELD LEADTIME COMPENSATION.

$$\underline{Q}(t_1) = \underline{Q}_f + \underline{j}_f T_{go}^* + \underline{S}_f \frac{T_{go}^{*2}}{2}$$

$$= \left(-24\frac{T_{go}^*}{T_{go}^3} + 36\frac{T_{go}^{*2}}{T_{go}^4}\right)(\underline{r}_f - \underline{r}_0)$$
$$+ \left(-18\frac{T_{go}^*}{T_{go}^2} + 24\frac{T_{go}^{*2}}{T_{go}^3}\right)\underline{V}_f$$
$$+ \left(-6\frac{T_{go}^*}{T_{go}^2} + 12\frac{T_{go}^{*2}}{T_{go}^3}\right)\underline{V}_0$$
$$+ \left(6\frac{T_{go}^{*2}}{T_{go}^2} - 6\frac{T_{go}^*}{T_{go}} + 1\right)\underline{Q}_f$$

TIME-TO-GO COMPUTATION

TIME TO GO IS COMPUTED TO SATISFY THE REQUIRED FINAL VALUE OF DOWN-RANGE JERK.

FROM THE ABOVE EQUATIONS :

$$j_{f_z} = \frac{24}{T_{go}^3}(r_{0_z} - r_{f_z}) - \frac{6}{T_{go}^2}(V_{0_z} + 3V_{f_z}) - \frac{6}{T_{go}}Q_{f_z}$$

THIS EQUATION IS SOLVED FOR T_{go} BY A NEWTON-RHAPSON ITERATION TECHNIQUE.

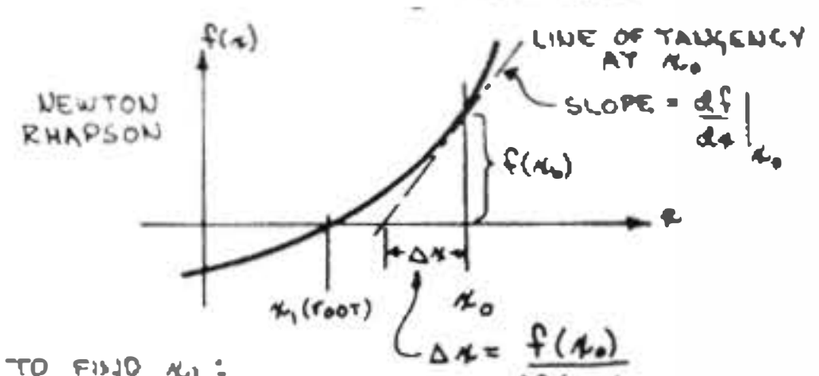

TO FIND x_1 :
INITIAL GUESS = x_0
NEW APPROXIMATION = $x_0 - \Delta x$

TO FIND TIME-TO-GO :
INITIAL GUESS = TTT
NEW APPROXIMATION = TTT − ΔTTT

$$\Delta TTT = \frac{j_{f_z} TTT^3 + 6Q_{f_z} TTT^2 + 6(V_{0_z} + 3V_{f_z})TTT - 24(r_{0_z} - r_{f_z})}{3j_{f_z} TTT^2 + 12Q_{f_z} TTT + 6(V_{0_z} + 3V_{f_z})}$$

BASIC MECHANIZATION OF QUADRATIC GUIDANCE (P63, P64)

THE FOLLOWING SEQUENCE OF COMPUTATIONS IS PERFORMED DURING EACH TWO SECOND GUIDANCE CYCLE.

1. COMPUTE TIME-TO-GO

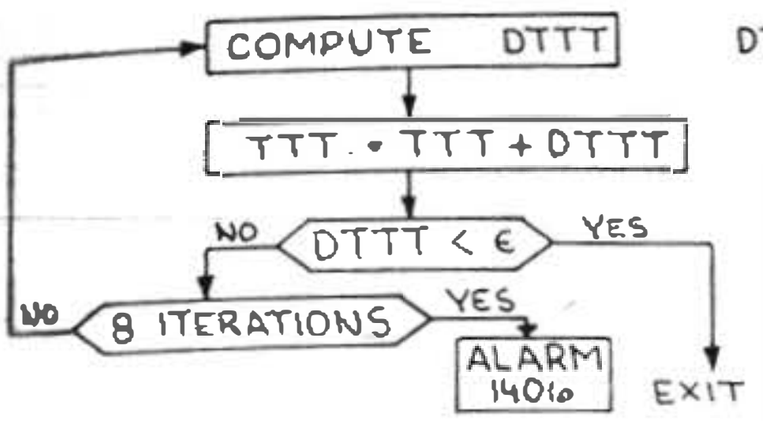

$$DTTT = -\frac{j_{f_z} TTT^3 + 6a_{f_z} TTT^2 + (18V_{f_z} + 6V_{o_z})TTT + 24(r_{f_z} - r_{o_z})}{3j_{f_z} TTT^2 + 12a_{f_z} TTT + (18V_{f_z} + 6V_{o_z})}$$

ϵ IS INITIALIZED ON EACH 2 SEC. CYCLE

$\epsilon = TTT/128$

2. COMPUTE ACCELERATION COMMAND

$$\underline{a}_G = \left(-24\frac{T_{go}^*}{T_{go}^3} + 36\frac{T_{go}^{*2}}{T_{go}^4}\right)(\underline{r}_f - \underline{r}_o) + \left(-18\frac{T_{go}^*}{T_{go}^2} + 24\frac{T_{go}^{*2}}{T_{go}^4}\right)\underline{V}_f + \left(-6\frac{T_{go}^*}{T_{go}^2} + 12\frac{T_{go}^{*2}}{T_{go}^3}\right)\underline{V}_o + \left(6\frac{T_{go}^{*2}}{T_{go}^2} - 6\frac{T_{go}^*}{T_{go}} + 1\right)\underline{a}_f - \underline{g}$$

WHERE:

$\underline{r}_o$, $\underline{V}_o$ } PRESENT VEHICLE POSITION & VELOCITY FROM STATE-VECTOR UPDATE ROUTINE

$\underline{a}_f$, $\underline{V}_f$, $\underline{r}_f$ } DESIRED AIM-POINT CONDITIONS FOR P63 or P64. (ERASABLE LOAD)

T_{go} = TTT AS DETERMINED ABOVE

T_{go}^* = TTT + LEADTIME

(LEADTIME = 2.2 SEC ERASABLE LOAD)

$\underline{g}$ = GRAVITY VECTOR

ERASABLE DATA LOAD AIM-POINTS

	P63	P64
$\underline{r}_f$ (ft)	$\begin{bmatrix} -3118.35 \\ 0 \\ -11741.44 \end{bmatrix}$	$\begin{bmatrix} 158.5 \\ 0 \\ -27.35 \end{bmatrix}$
$\underline{V}_f$ (ft/sec)	$\begin{bmatrix} -196.46 \\ 0 \\ -166.75 \end{bmatrix}$	$\begin{bmatrix} -3.53 \\ 0 \\ -.025 \end{bmatrix}$
$\underline{a}_f$ (ft/sec²)	$\begin{bmatrix} -.718 \\ 0 \\ -8.302 \end{bmatrix}$	$\begin{bmatrix} .07717 \\ 0 \\ -.589 \end{bmatrix}$
j_{f_z} (ft/sec³)	1.512×10^{-2}	4.317×10^{-2}

RADIAL GUIDANCE

IF THE DESIRED ACCELERATION IS GREATER THAN MAX. ENGINE THRUST, THEN DOWNRANGE THRUST IS LIMITED.

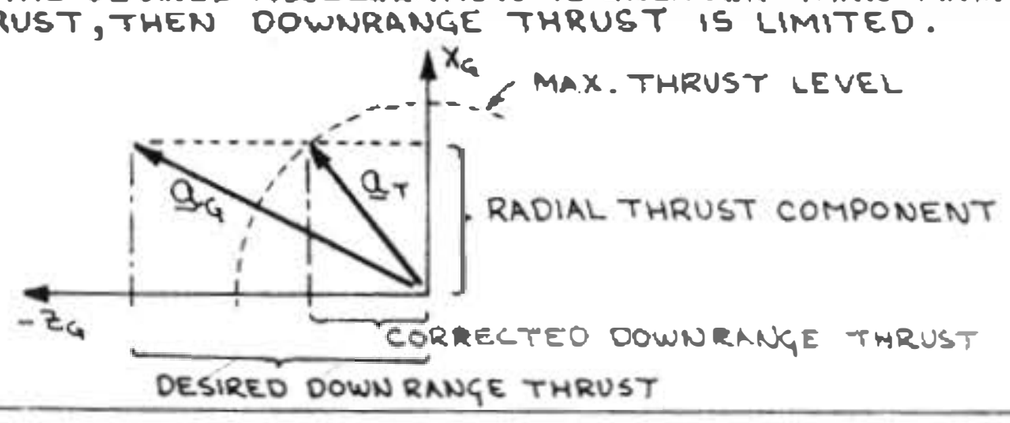

BASIC MECHANIZATION (CONT.)

3. ALIGN THE GUIDANCE COORDINATE FRAME

THE GUIDANCE FRAME IS ALIGNED SO THAT THE CROSS-RANGE (Y-COMPONENT) OF JERK IS ZERO AT PHASE TERMINUS. THE Y.COMPONENT OF $\underline{j}_f$ IS GIVEN BY THE QUADRATIC GUIDANCE EQUATIONS.

$$j_{f_Y} = -\frac{6}{T_{go}^2}\left(r_{o_Y} + 3v_{f_Y}\right) - \frac{24}{T_{go}^3}\left(r_{f_Y} - r_{o_Y}\right) - \frac{6}{T_{go}}a_{f_Y}$$

THE Y-COMPONENTS OF THE AIM-POINT VECTORS ARE SPECIFIED AS ZERO: $r_{f_Y} = v_{f_Y} = a_{f_Y} = 0$

$$\therefore \quad 0 = -\frac{6}{T_{go}^2}v_{o_Y} + \frac{24}{T_{go}^3}r_{o_Y}$$

$$\text{or:} \quad r_{o_Y} - \frac{T_{go}}{4}v_{o_Y} = 0 \Rightarrow \left(\underline{r}_o - \underline{v}_o\frac{T_{go}}{4}\right)_Y = 0$$

THUS, THE GUIDANCE FRAME IS ALIGNED WITH ITS Y-AXIS PERPENDICULAR TO THE VECTOR $\left(\underline{r}_o - \underline{v}_o\frac{T_{go}}{4}\right)$

$$\underline{u}_{x_G} = \text{UNIT}(\underline{r}_{LS})$$

$$\underline{u}_{y_G} = \text{UNIT}\left(\underline{r}_{LS} \times \left(\underline{r}_o - \underline{v}_o\frac{T_{go}}{4}\right)\right)$$

$$\underline{u}_{z_G} = \underline{u}_{x_G} \times \underline{u}_{y_G}$$

4. COMPUTE THE WINDOW POINTING VECTOR

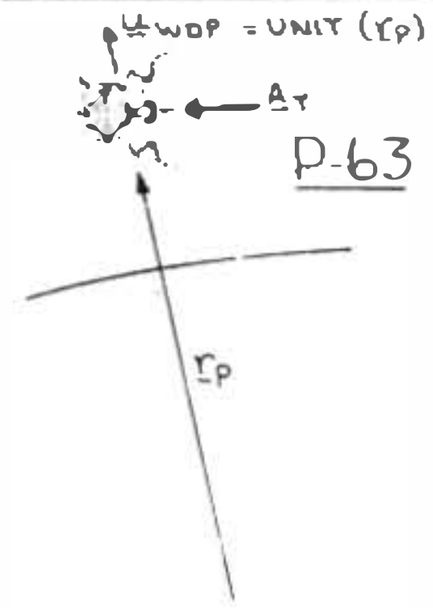

P-64

IF $\alpha \leq 15°$ THE LANDING SITE IS NOT VISIBLE AND THE WINDOW-POINTING VECTOR IS ALIGNED ALONG $\underline{z}_G$.

IF $\alpha \geq 25°$ THE LANDING SITE IS VISIBLE. AND THE WINDOW-POINTING VECTOR IS ALIGNED ALONG $\underline{r}_G$.

IF $15° < \alpha < 25°$ A SMOOTH TRANSITION IS MADE BETWEEN THE ABOVE TWO CASES.

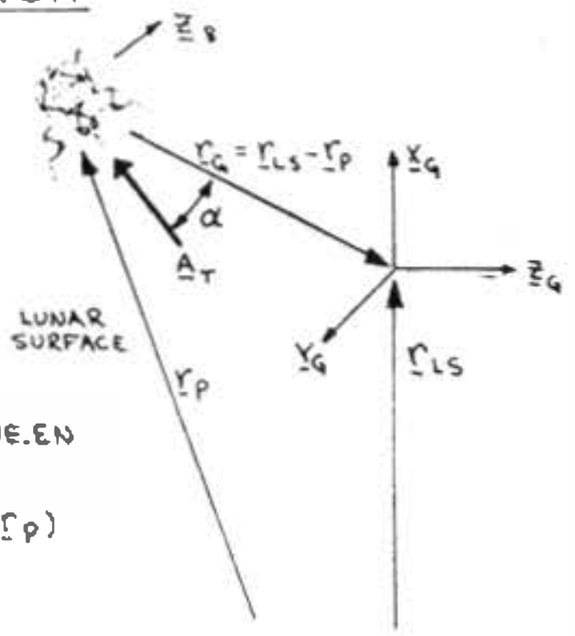

$$\underline{u}_{WDP} = B1\,\underline{u}_{z_G} + B2\,(\underline{r}_{LS} - \underline{r}_p)$$

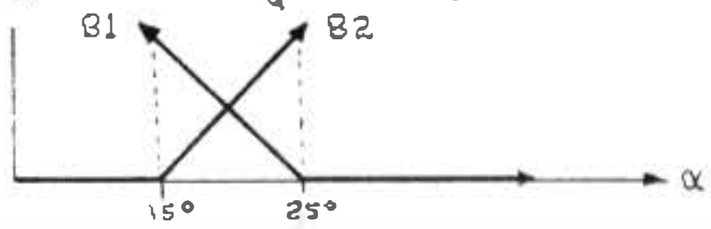

$$\alpha = \left(\text{UNIT}(\underline{r}_G) \times \underline{u}_{x_{BP}}\right) \cdot \underline{u}_{y_G}$$

= ANGLE BETWEEN $\underline{r}_G$ & $\underline{A}_T$ NORMALIZED FOR ANY CROSS-RANGE THRUSTING.

SPACE-CRAFT ORIENTATION

THE X-BODY AXIS IS ALIGNED ALONG THE DESIRED THRUST VECTOR $\underline{A}_T$.

THE Z-BODY AXIS IS ALIGNED IN THE PLANE CONTAINING $\underline{A}_T$ & $\underline{u}_{WDP}$

5. COMPUTE THRUST MAGNITUDE

ACTUAL THROTTLE SETTINGS ARE LIMITED BY ENGINE CONSIDERATIONS TO ≈93 % OF FULL SCALE OR LESS THAN 63 %.

ERASABLE DATA LOAD PARAMETERS		
LOCRIT	5985 LBS	= 57 %
HIGHCRIT	6615 LBS	= 63 %

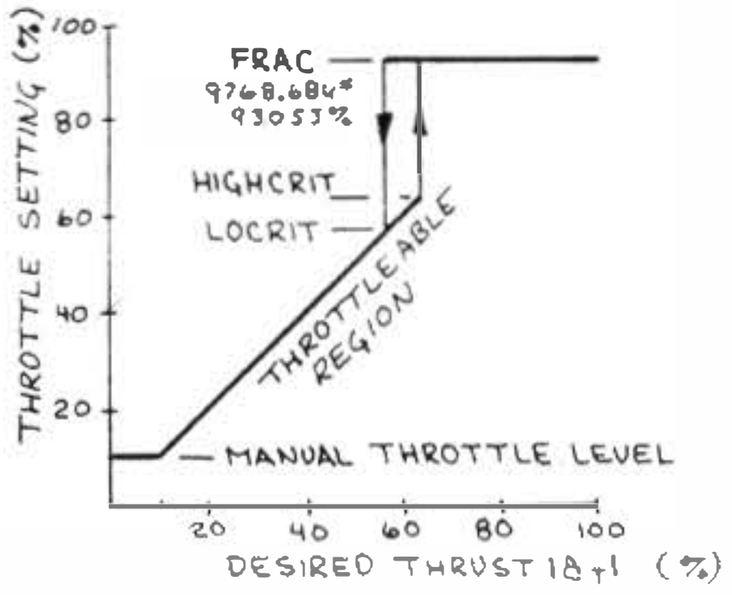

LUNAR LANDING – STATE VECTOR UPDATE RECURSIVE FILTER BLOCK DIAGRAM

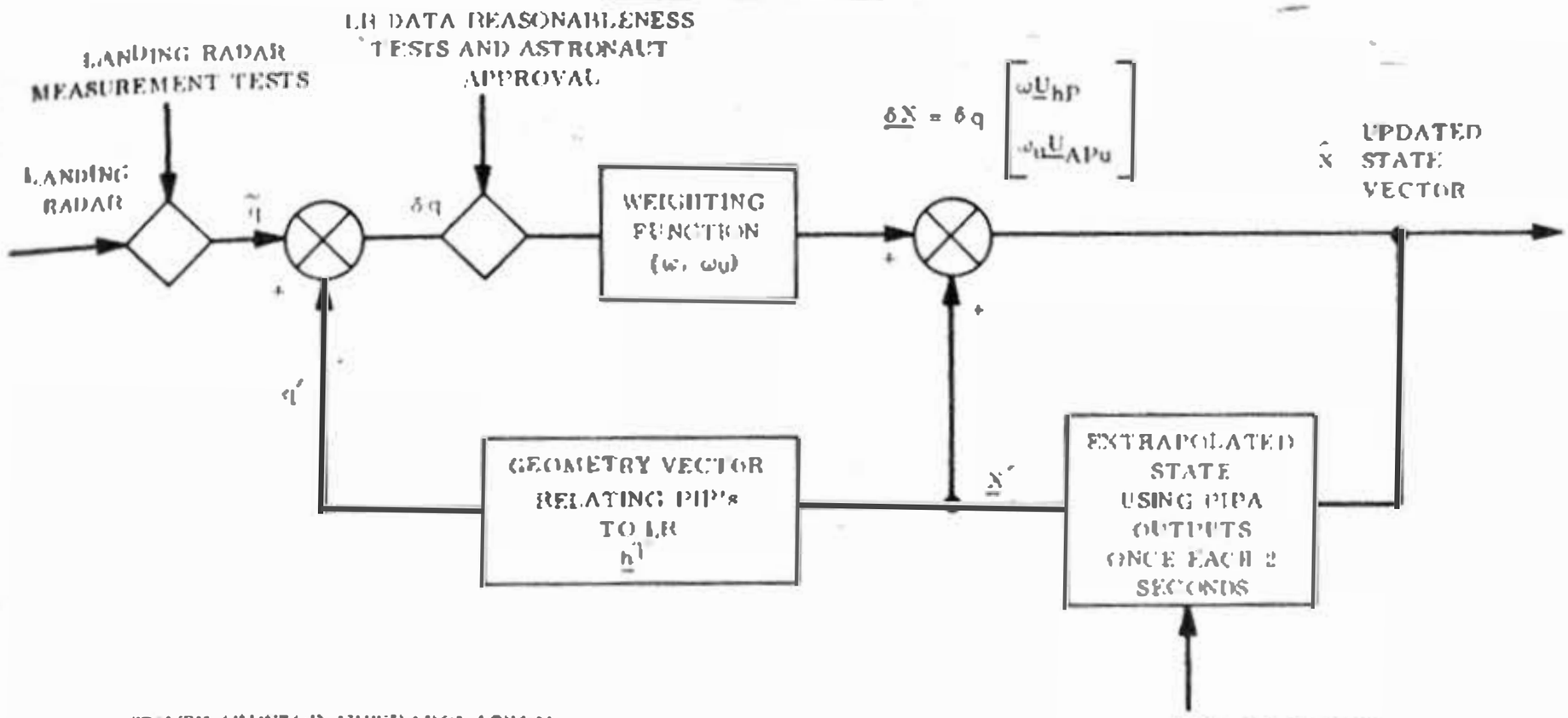

- STATE VECTOR EXTRAPOLATION

$$\hat{X}' = \begin{bmatrix} \underline{r}_P \\ \underline{V}_P \end{bmatrix} = \begin{bmatrix} \underline{r}_{n-1} + (t_n - t_{n-1}) \left(\underline{V}_{n-1} + \frac{\Delta \tilde{\underline{V}}_P}{2} + \frac{\underline{g}_{n-1} \Delta t}{2} \right) \\ \underline{V}_{n-1} + \Delta \tilde{\underline{V}}_P + (\underline{g}_P + \underline{g}_{n-1}) \frac{\Delta t}{2} \end{bmatrix}$$

P = PLATFORM FRAME

- STATE VECTOR UPDATE

$$\hat{\underline{X}} = \begin{bmatrix} \underline{r}_P \\ \underline{V}_P \end{bmatrix} + \begin{bmatrix} \delta q_h \, \omega \underline{u}_{hP} \\ \delta q_u \, \omega_u \underline{u}_{APu} \end{bmatrix}$$

CONDITIONS NECESSARY TO UPDATE STATE USING LR RANGE DATA:

- LANDING RADAR IS NOT BEING SWITCHED FROM POSITION NO. 1 TO POSITION NO. 2
- RANGE DATA MEASUREMENT TESTS ARE SATISFIED.
  - DATA GOOD DISCRETE HAS BEEN PRESENT FOR 4 SECONDS OR MORE.
  - LR RANGE SCALE HAS NOT BEEN CHANGED WITHIN LAST SECOND.
- MEASUREMENT RESIDUAL (δq) IS WITHIN SPECIFIED LIMITS $|\delta q| <$ DELQFIX* + 0.125 (q') (only in P64)
- ASTRONAUT APPROVAL FOR UPDATING HAS BEEN GIVEN (V57).

CONDITIONS NECESSARY TO UPDATE STATE USING LR VELOCITY DATA:

- ESTIMATED VELOCITY IS LESS THAN 6,000 ft/s. (VFP)
- LANDING RADAR IS NOT BEING SWITCHED FROM POSITION NO. 1 TO POSITION 2.
- VELOCITY DATA MEASUREMENT TESTS ARE SATISFIED:
  - DATA GOOD DISCRETE HAS BEEN PRESENT FOR AT LEAST 4 SECONDS.
- MEASUREMENT RESIDUAL IS WITHIN SPECIFIED LIMITS $|\delta q_v| <$ 3.5 + 0.125 ($\underline{V}'_U - \underline{V}_P \cdot \underline{\Gamma}_P$).
- ASTRONAUT APPROVAL FOR UPDATING HAS BEEN GIVEN (V57).

*DELQFIX = 100 ft

STATE VECTOR EXTRAPOLATION

State vector extrapolation is accomplished by an Average G routine at 2-second intervals coincident with PIPA ΔV processing.

I.M position vector ($\underline{r}_p$) is extrapolated assuming constant acceleration over the 2-second interval

$$r = r_0 + v_0\Delta t + \frac{1}{2} a \Delta t^2$$

$$\underline{r}_p = \underline{r}_{n-1} + \underline{v}_{n-1}(t_n - t_{n-1}) + \frac{\underline{\Delta\tilde{v}}_p}{2} \Delta t + \frac{\underline{g}_{n-1}}{2} \Delta t^2$$

where

$\underline{r}_{n-1}$ = position vector ($\underline{r}_p$) at end of previous interval

$\underline{v}_{n-1}$ = velocity vector ($\underline{v}_p$) at end of previous interval

$\underline{\Delta\tilde{v}}_p$ = accumulated PIPA ΔV pulses during 2-second interval

$\underline{g}_{n-1}$ = lunar gravitational acceleration at end of previous interval

I.M velocity vector ($\underline{v}_p$) is extrapolated using PIPA ΔV pulses and the average gravitational acceleration over the 2-second interval

$$v = v_0 + a\Delta t$$

$$\underline{v}_p = \underline{v}_{n-1} + \underline{\Delta\tilde{v}}_p + \left[\frac{\underline{g}_{n-1} + \underline{g}_p}{2}\right] \Delta t$$

where

$\underline{v}_{n-1}$ = velocity ($\underline{v}_p$) at end of previous interval

$\underline{\Delta\tilde{v}}_p$ = accumulated PIPA ΔV pulses over 2-second interval

g_{n-1} = lunar gravitational acceleration at end of previous interval

g_p = lunar gravitational acceleration at end of present interval

$$\underline{g}_p = \frac{-\mu M}{r_p^3} \underline{r}_p$$

In addition to the state vector update, the following terms are computed

Altitude $\quad h' = r_p - r_{Ls}$

where

r_p = magnitude of position, $\underline{r}_p$

r_{LS} = magnitude of landing site, $\underline{r}_{LS}$

Velocity $\quad v' = |\underline{v}_p|$

Mass $\quad m_n = m_{n-1} - |\underline{\Delta\tilde{v}}_p| \, m_{n-1}/V_e$ (V_e = Exhaust Velocity Constant)

Velocity Increment $\quad \Delta V = \Delta V + |\underline{\Delta\tilde{v}}_p|$

UPDATE THE STATE VECTOR USING LR RANGE DATA

LUNAR LANDING ALTITUDE GEOMETRY

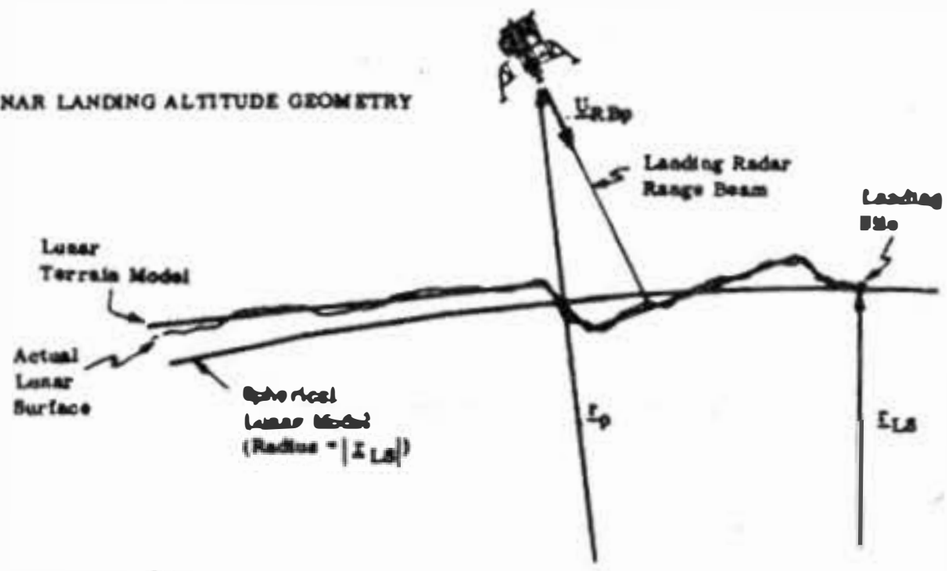

- Compute the estimated altitude

$$h' = |\underline{r}_p| - |\underline{r}_{LS}|$$

where

h' = estimated altitude

$|\underline{r}_p|$ = magnitude of LM position vector

$|\underline{r}_{LS}|$ = magnitude of landing site vector

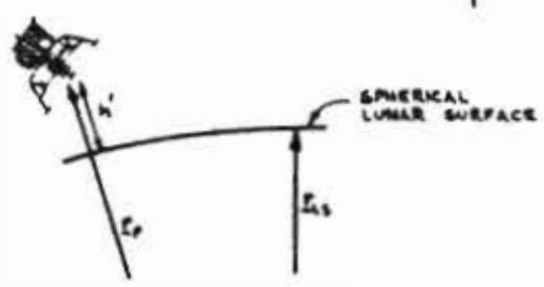

- Compute the measured altitude

$$\tilde{h} = h_{LR} + h_T$$

$$h_{LR} = q^* (\underline{U}_{RB_p} \cdot \text{Unit}(\underline{r}_p))$$

where

$\tilde{h}$ = measured altitude

h_{LR} = altitude derived from LR range data

q^* = range to surface as measured by the Landing Radar

$\underline{U}_{RB_p}$ = unit vector along LR range beam

$\underline{r}_p$ = spacecraft position vector

h_T = altitude correction from lunar terrain model

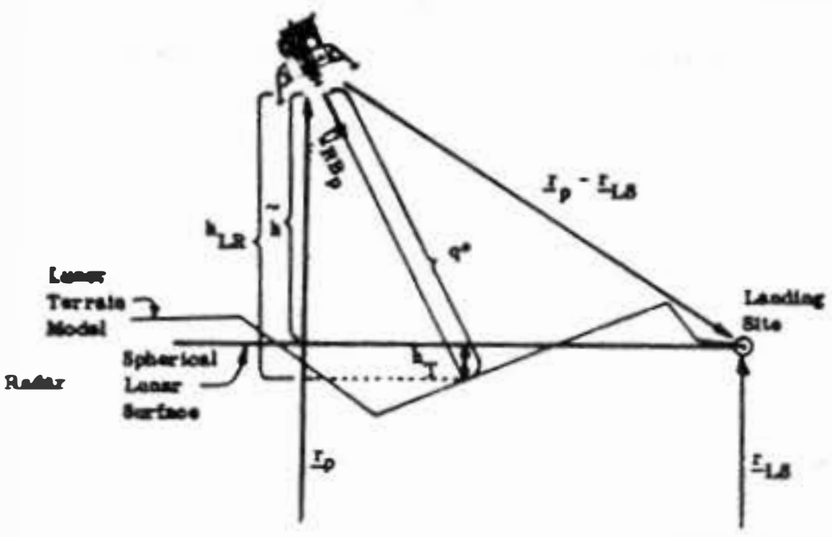

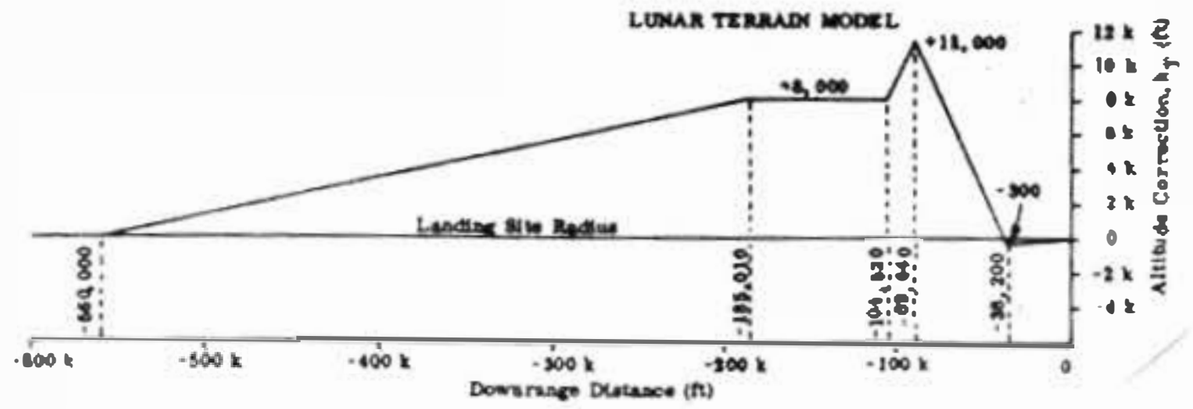

- Compute the measurement residual

$$\Delta h = \tilde{h} - h'$$

where

$\tilde{h}$ = measured altitude derived from LR slant range

h' = estimated altitude

- Update the position vector using the precomputed gain and measurement residual

$$\underline{r}_p = \underline{r}_p^* + \Delta h \, \underline{u}_{hp}$$

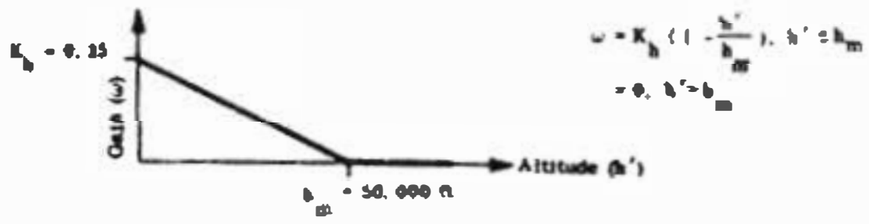

UPDATE THE STATE VECTOR USING LR VELOCITY DATA

The Landing Radar has three velocity components. They are used (one during each 2-second interval) to update state according to the time line shown below.

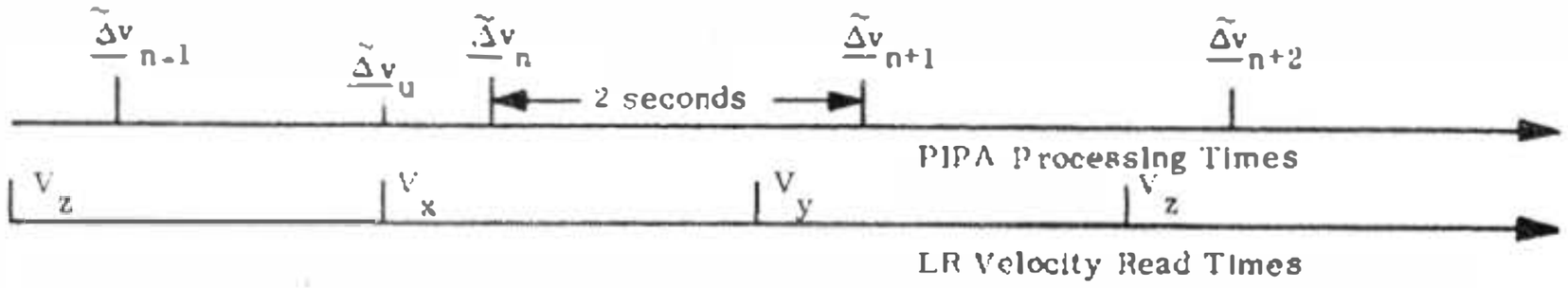

$\tilde{q}_u = V_x$ $\quad$ $\tilde{q}_u = V_y$ $\quad$ $\tilde{q}_u = V_z$

$\underline{u}_{AP_u} = [C_{PB_u}]\,\underline{u}_x$ $\quad$ $\underline{u}_{AP_u} = [C_{PB_u}]\,\underline{u}_y$ $\quad$ $\underline{u}_{AP_u} = [C_{PB_u}]\,\underline{u}_z$

- Compute the measurement residual corresponding to the time that the velocity data is read (t_u).

  $\delta q = \tilde{q}_u - q'_u$

  $\tilde{q}_u$ = LR velocity component read at time t_u

  q'_u = estimated component of LM relative velocity in the direction of $\tilde{q}_u$

  $q'_u = (\underline{v}'_u - \omega_p \times \underline{r}_p) \cdot \underline{u}_{AP_u}$

  where

  $\omega_p \times \underline{r}_p$ = velocity of lunar surface

  $\underline{u}_{AP_u}$ = unit vector in direction of LM velocity data

  $\underline{v}'_u - \omega_p \times \underline{r}_p$ = velocity of LM relative to lunar surface

  $\underline{v}'_u$ = estimated LM velocity at time t_u

  $\underline{v}'_u = \underline{v}_{n-1} + \tilde{\Delta v}_u + g_{n-1}(t_u - t_{n-1})$

  where

  $\underline{v}_{n-1}$ = LM velocity at end of previous update cycle

  $\tilde{\Delta v}_u$ = PIPA ΔV read at time of LR velocity data t_u

  g_{n-1} = lunar gravitational acceleration at end of previous cycle

- Update the LM velocity vector at time t_n using measurement residual and extrapolate velocity ($\underline{v}_p$)

  $\underline{v}_p = \underline{v}_p + \omega_u\, \delta q\, \underline{u}_{AP_u}$

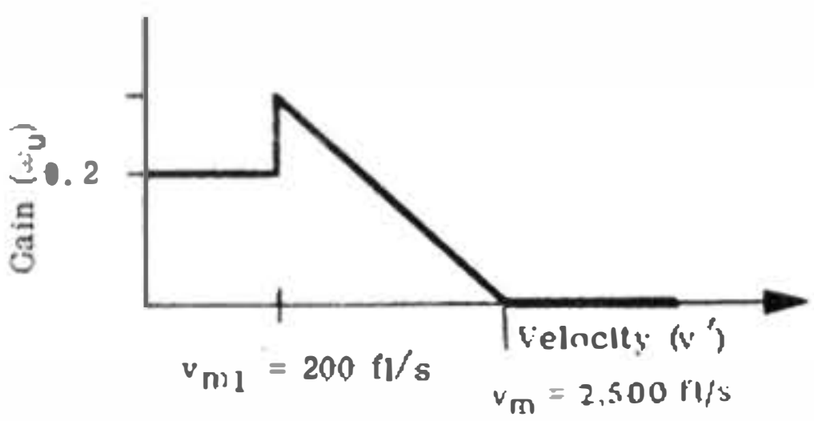

$\omega_u = 0,\ v' > v_m$

$\omega_u = 0.3\,(1 - v'/v_m),\ v_{m1} \le v' \le v_m$

$\omega = 0.2,\ v' < v_{m1}$

LUNAR LANDING PARAMETERS (P63, P64)
APOLLO 15

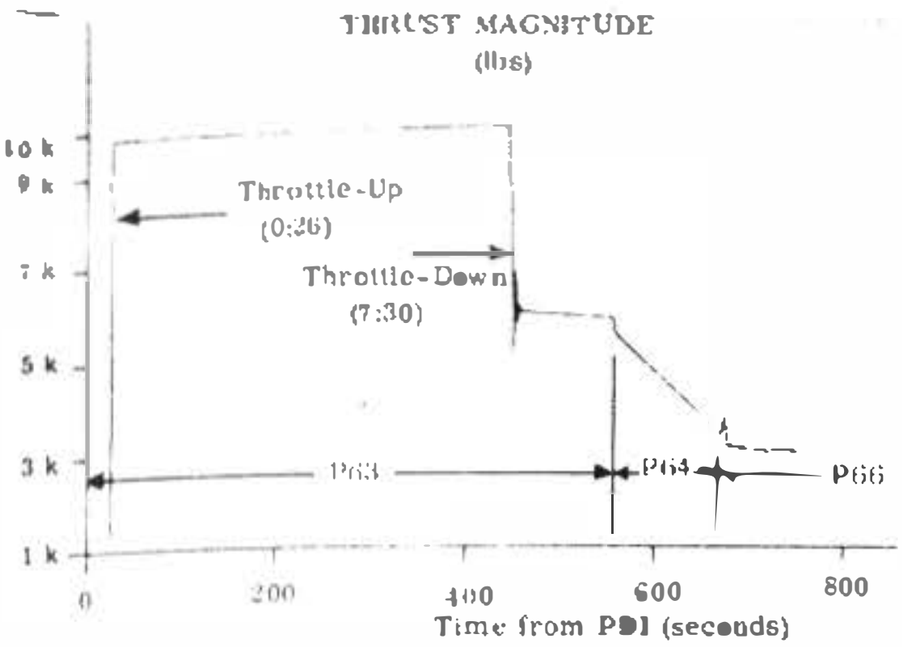

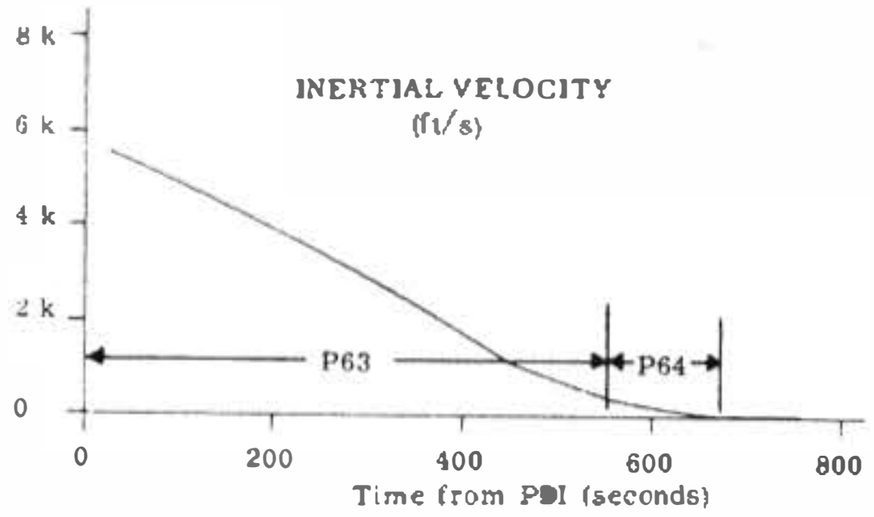

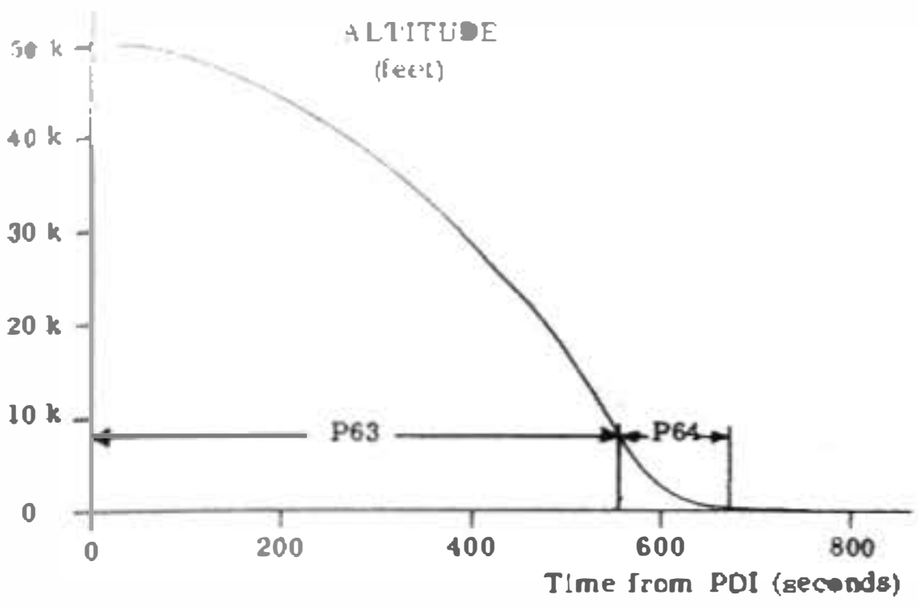

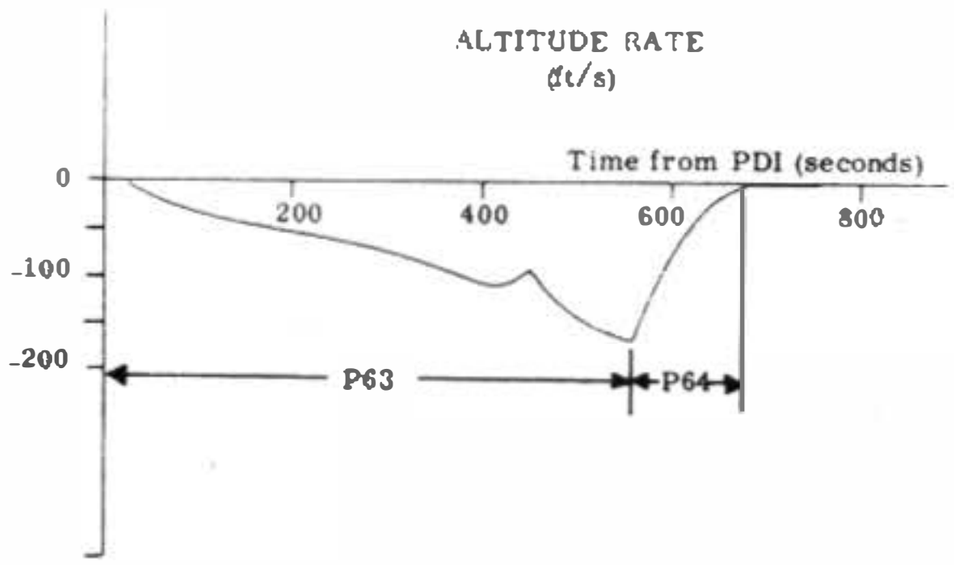

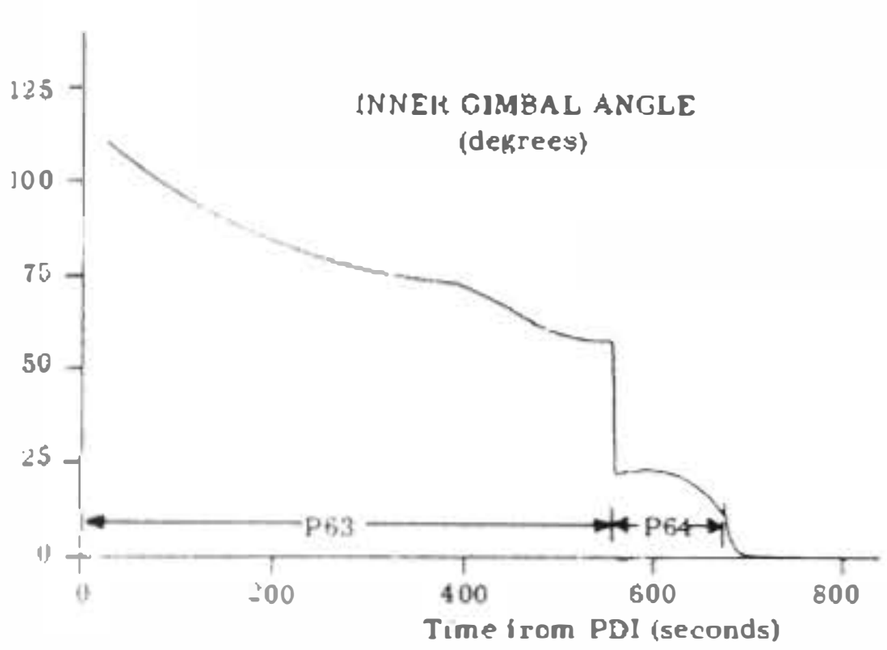

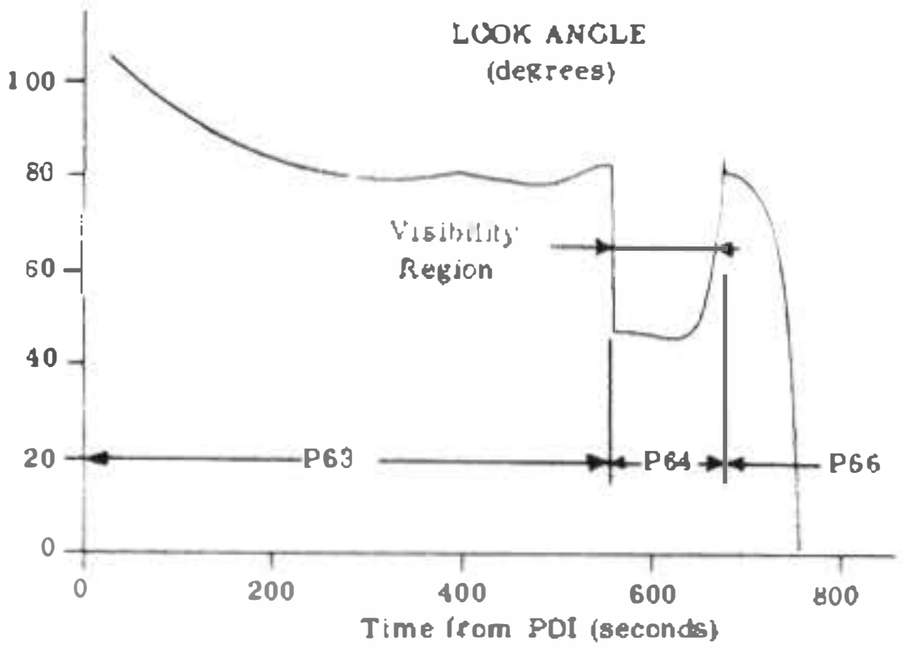

LUNAR LANDING PARAMETERS (P64)
APOLLO 15

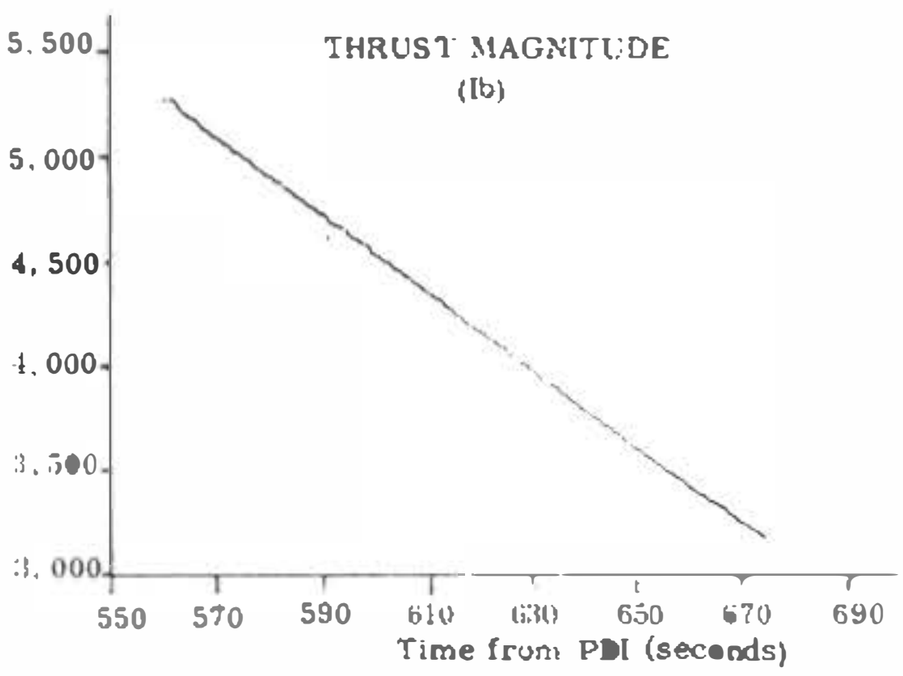

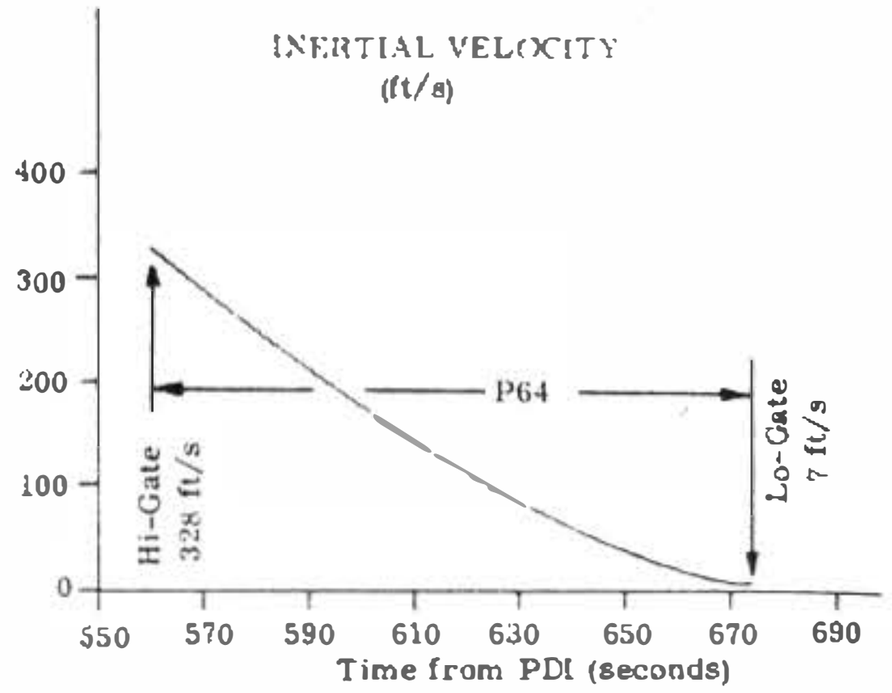

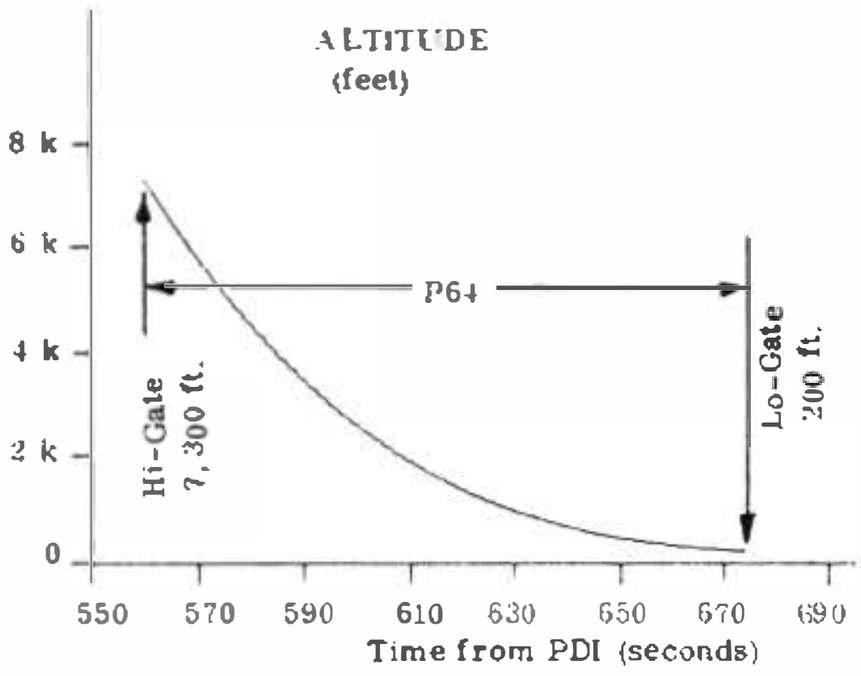

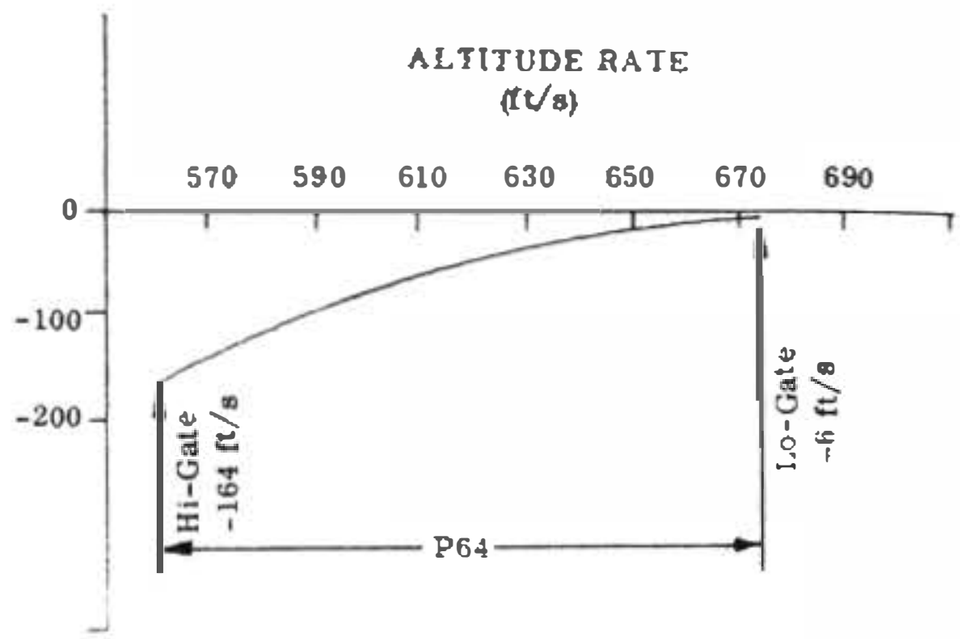

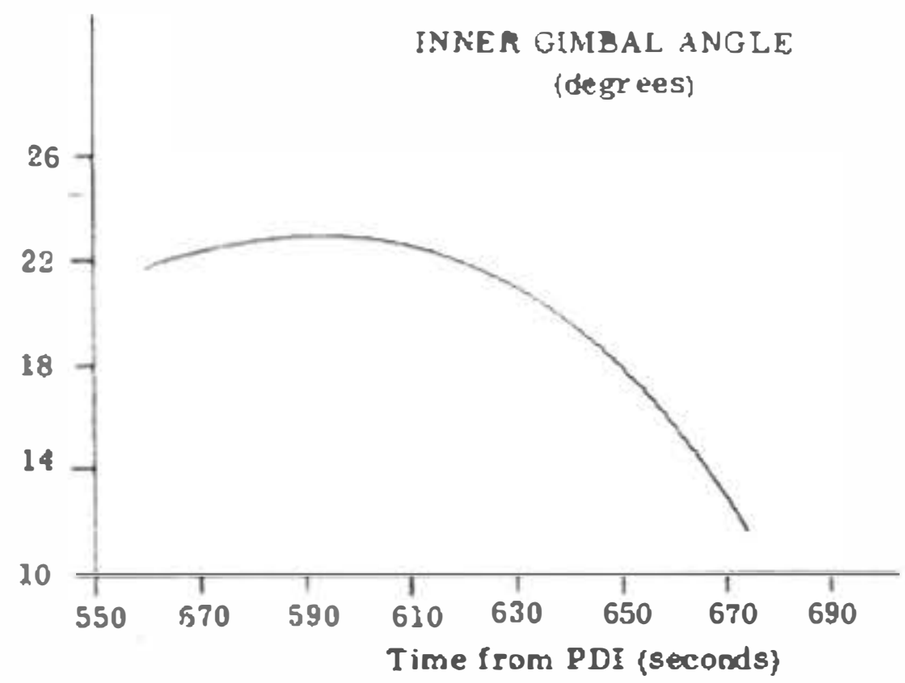

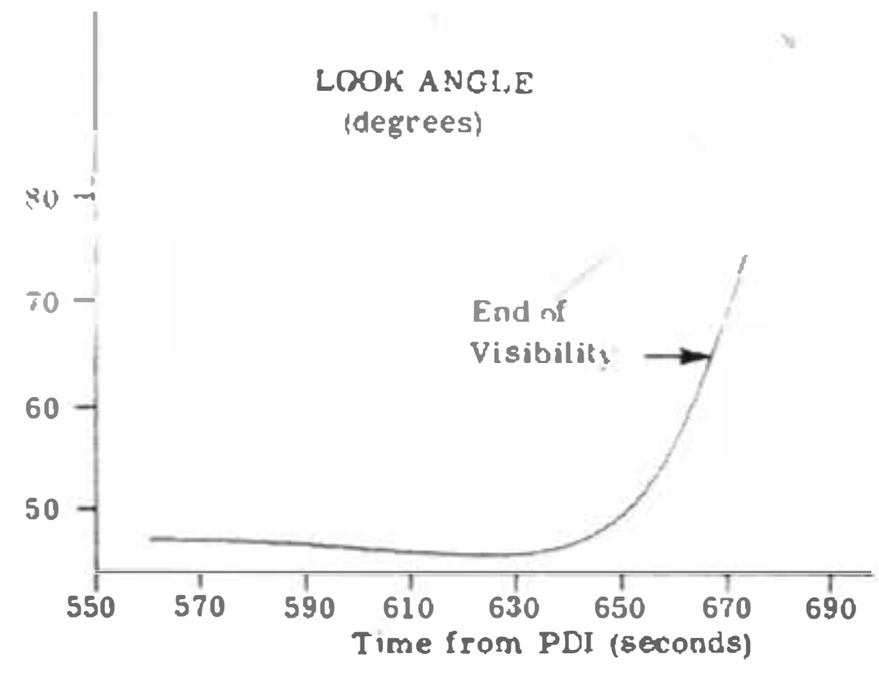

A. ORBITAL RELATIONSHIPS

Assuming a spherical planet, the equation of motion for a satellite is given by

$$\frac{d^2 \vec{r}}{d t^2} = - \frac{\mu}{r^3} \vec{r} \qquad (1)$$

where

$\mu = (M_{Planet} + M_{Satellite})\, G$

G = gravitational constant

The solution of Equation 1 is:

$$r = \frac{h^2/\mu}{1 + e \cos f} \qquad (2)$$

where

h = angular momentum of the satellite

e = eccentricity of the orbit

f = true anomaly

which is the polar equation of a conic. The conic will be an ellipse, a parabola, or a hyperbola. Treating the parabola as a special case of the ellipse and considering only the hyperbola and ellipse, the following relationships are obtained:

Angular Momentum	$\vec{h} = \vec{r} \times \vec{v} = r^2 \dot{f}$ = constant
Velocity	$V^2 = \mu\,(2/r - 1/a)$
Apogee	$r_a = a\,(1 + e)$
Semilatus Rectum	$p = h^2/\mu$
Semimajor Axis	$a = r\mu/(2\mu - rv^2)$ Negative for hyperbola
Eccentricity	$e = (1 - h^2/\mu a)^{1/2}$
Perigee	$r_p = a\,(1 - e)$
True Anomaly	$\cos f = \frac{p}{re} - \frac{1}{e}$, $\sin f = \frac{h}{\mu re}\, \vec{r} \cdot \vec{v}$

Ellipse Only

Period	$P = 2\pi\,(a^{3/2}/\mu^{1/2})$
Mean Motion	$n = \mu^{1/2}/a^{3/2}$
Mean Anomaly	$M = n\,(t - \tau)$
	τ = time of perigee passage
Eccentric Anomaly	$E - e \sin E = M$ (Kepler's Equation)
	$\tan (E/2) = \lvert (1 - e)/(1 + e) \rvert^{1/2} \tan (f/2)$

Hyperbola Only

Mean Motion	$\gamma^2 = \mu/a^3$
Mean Anomaly	$M = \gamma\,(t - \tau)$
	τ = time of perigee passage
Eccentric Anomaly	$H - e \sinh H = M$
	$\tanh (H/2) = \lvert (e - 1)/(e + 1) \rvert^{1/2} \tan (f/2)$

From these relationships, given an initial position and velocity vector, the orbit and orbit parameters are uniquely determined.

B. THE ORBIT IN SPACE

The orbit in space is defined by an orthogonal set of axes along perigee, the semilatus rectum, and the angular momentum vector. The ordered set of right hand rotations (Euler angles) to achieve this orientation from the earth-centered-inertial (ECI) frame are illustrated in Figure 1 and given by the expression

$$\begin{bmatrix} P \\ Q \\ W \end{bmatrix}_{Orbit} = [R_Z(w)]\,[R_X(i)]\,[R_Z(\Omega)] \begin{bmatrix} X \\ Y \\ Z \end{bmatrix}_{ECI} = [A] \begin{bmatrix} X \\ Y \\ Z \end{bmatrix}_{ECI} \qquad (3)$$

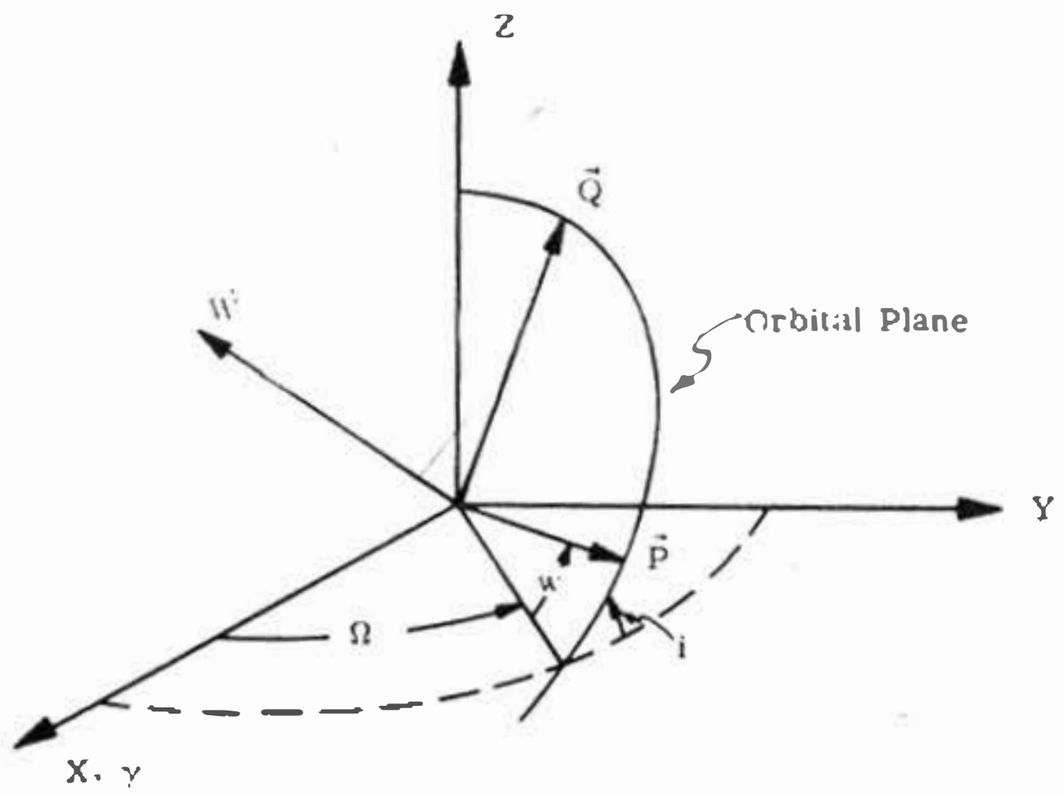

where

Ω = longitude of ascending node

i = angle of incidence

w = argument of perigee

Figure 1. The Orbit in Space

The angles Ω, i, and w are generally unknowns; therefore, the elements in [A] must be evaluated by some other means. To this end, Equation 3 is expressed as follows:

$$\begin{bmatrix} P \\ Q \\ W \end{bmatrix} = \begin{bmatrix} P_X & P_Y & P_Z \\ Q_X & Q_Y & Q_Z \\ W_X & W_Y & W_Z \end{bmatrix} \begin{bmatrix} X \\ Y \\ Z \end{bmatrix}_{ECI} = [B] \begin{bmatrix} X \\ Y \\ Z \end{bmatrix}_{ECI} \qquad (4)$$

The unit vector along perigee (that is, P_X, P_Y, P_Z) can be determined by Equation 141, Page 20 of Battin as follows:

$$\vec{P} = \frac{1}{\mu e}\left[\left(v^2 - \frac{\mu}{r}\right)\vec{r} - (\vec{r}\cdot\vec{v})\,\vec{v}\right] \qquad (5)$$

where

v = absolute magnitude of velocity

r = absolute magnitude of the radius vector

$\vec{v}$ = inertial velocity

$\vec{r}$ = radius vector

This relationship is obtained as follows:

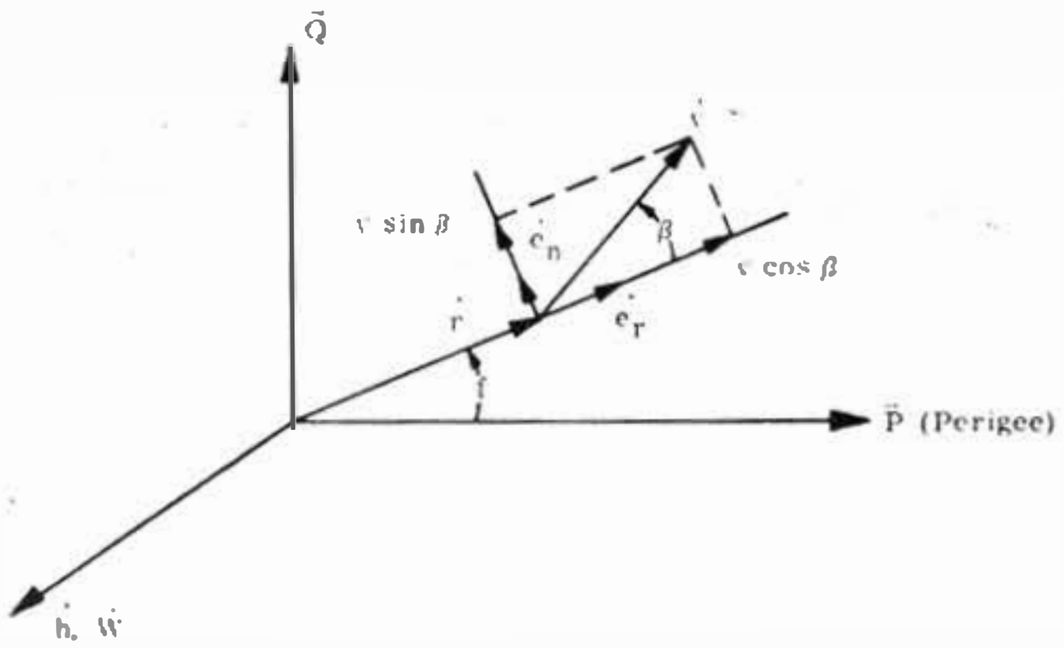

Figure 2

$$\vec{P} = \vec{e}_r \cos f - \vec{e}_n \sin f \qquad (6)$$

(1) $\vec{e}_r = \frac{\vec{r}}{r}$; $\vec{e}_h = \frac{\vec{h}}{h}$; $\vec{e}_n = \frac{\vec{h}}{h} \times \frac{\vec{r}}{r}$

(2) $r = \frac{h^2/\mu}{1 + e \cos f}$; $\cos f = \frac{h^2}{\mu e} r^{-1} - \frac{1}{e}$; $\sin f = \frac{h}{\mu e} \dot{r}$;

but $\dot{r} = v\dot{e}_r = v \cos \beta = \frac{\vec{r} \cdot \vec{v}}{r}$

(3) $\sin f = \frac{h}{\mu e} \frac{\vec{r} \cdot \vec{v}}{r}$

Combining 1, 2, and 3 into Equation 6

$$\vec{P} = \frac{\vec{r}}{r} \left[\frac{h^2}{\mu e r} - \frac{1}{e} \right] - \left(\frac{\vec{h}}{h} \times \frac{\vec{r}}{r} \right) \left[\frac{h}{\mu e} \frac{\vec{r} \cdot \vec{v}}{r} \right]$$

By substituting

$$h = r v \sin \beta, \cos \beta = \frac{\vec{r} \cdot \vec{v}}{rv}$$

and adding the factor

$$r v^2 \cos^2 \beta \vec{e}_r - r v^2 \cos^2 \beta \vec{e}_r$$

the above equation reduces to

$$\vec{P} = \frac{1}{\mu e} \left[\left(v^2 - \frac{\mu}{r} \right) \vec{r} - (\vec{r} \cdot \vec{v}) (v \cos \beta \vec{e}_r + v \sin \beta \vec{e}_n) \right]$$

but

$$\vec{v} = v \cos \beta \vec{e}_r + v \sin \beta \vec{e}_n$$

therefore

$$\vec{P} = \frac{1}{\mu e} \left[\left(v^2 - \frac{\mu}{r} \right) \vec{r} - (\vec{r} \cdot \vec{v}) \vec{v} \right]$$

Since $\vec{h}$ = constant, the unit vector along $\vec{h}$ (that is, W_X, W_Y, W_Z) is determined given any $\vec{r}$ and corresponding $\vec{v}$ in the orbit. That is

$$\vec{W} = \frac{\vec{h}}{h} = \frac{\vec{r} \times \vec{v}}{rv \sin \beta} \qquad (7)$$

Having determined $\vec{P}$ and $\vec{W}$, the remaining unit vector, $\vec{Q}$, is calculated as follows:

$$\vec{Q} = \vec{W} \times \vec{P} \qquad (8)$$

By using Equations 6, 7, and 8 the matrix $|B|$ is determined. That is, the orbit is defined in inertial space. From Equations 3 and 4, $|A| = |B|$. By equating elements and by using the constraint $0° \leq i \leq 180°$, the Euler angles Ω, i, and ω are determined.

C. ORBIT DETERMINATION

The problem of orbit determination can be stated as follows: Given an initial $\vec{r}_1$ and corresponding $\vec{v}_1$ vector expressed in ECI coordinates, determine the position and velocity in ECI coordinates at some time, t_2.

From what has been presented so far, the approach would be to determine if the conic is a hyperbola or an ellipse. Then use the corresponding form of Kepler's equation to solve for the true anomaly and through the orbit-in-space-transformation determine the position and velocity at t_2.

This method has the undesirable feature of first determining if the conic is a hyperbola or an ellipse and requires two sets of equations.

A more unified approach as presented by Battin is the universal conic equations which are given by

$$\vec{r}(t_2) = \left[1 - \frac{X^2}{r_1} C(X^2 \alpha_1) \right] \vec{r}_1 + \left[\Delta t - \frac{X^3}{\sqrt{\mu}} S(X^2 \alpha_1) \right] \vec{v}_1 \qquad (9)$$

$$\vec{v}(t_2) = \frac{\sqrt{\mu}}{r_2 r_1} \left[\alpha_1 X^3 S(X^2 \alpha_1) - X \right] \vec{r}_1 + \left[1 - \frac{X^2}{r_2} C(X^2 \alpha_1) \right] \vec{v}_1 \qquad (10)$$

where

$$C(X^2 \alpha_1) = \frac{1}{2!} - \frac{X^2 \alpha_1}{4!} + \frac{(X^2 \alpha_1)^2}{6!} - \ldots$$

$$S(X^2 \alpha_1) = \frac{1}{3!} - \frac{X^2 \alpha_1}{5!} + \frac{(X^2 \alpha_1)^2}{7!} - \ldots$$

$$\Delta t = t_2 - t_1$$

$$\alpha_1 = \frac{1}{a} = \frac{2}{r_1} - \frac{v_1^2}{\mu}$$

$$X = \frac{E_2 - E_1}{\sqrt{\alpha_1}} \quad \text{for ellipse}$$

$$X = \frac{H_2 - H_1}{\sqrt{-\alpha_1}} \quad \text{for hyperbola}$$

The parameter X which is required for Equations 9 and 10 is determined as follows: An initial guess for X is given by

$$X = X_1 + S \left[1 - F_3 S (1 - 2 F_3 S) - \frac{1}{6} \left(\frac{1}{r_1} - \alpha_1 \right) S^2 \right] \qquad (11)$$

where

X_1 = 0 for the first iteration and X for subsequent iterations

$$F_3 = \frac{\vec{r}_1 \cdot \vec{v}_1}{2 r_1 \sqrt{\mu}}$$

$$S = \frac{\sqrt{\mu}}{2 r_1} (t_2 - t_1)$$

Having an initial guess for X, an improved value is obtained by a Newton-Rhapson iteration scheme as follows:

$$X_{n+1} = X_n - \frac{F(X_n)}{F'(X_n)} \qquad (12)$$

where

$$F(X_n) = \left[\frac{\vec{r}_1 \cdot \vec{v}_1}{\sqrt{\mu}} X_n^2 C(X_n^2 \alpha_1) + (1 - r_1 \alpha_1) X_n^3 S(X_n^2 \alpha_1) + r_1 X_n \right] - \sqrt{\mu} \Delta t$$

$$F'(X_n) = \frac{\vec{r}_1 \cdot \vec{v}_1}{\sqrt{\mu}} \left[X_n - \alpha_1 X_n^3 S(X_n^2 \alpha_1) \right] + \left[(1 - r_1 \alpha_1) X_n^2 C(X_n^2 \alpha_1) + r_1 \right]$$

The iteration scheme of Equation 12 continues until $x_{n+1} - x_n$ is sufficiently small. The good initial guess provided by Equation 11 limits the iteration to two or three in most cases. The value for x_{n+1} is then substituted into Equations 9 and 10, thereby specifying r_f and v_f in ECI space. Following the universal conic method just described, the position and velocity vectors referred to ECI space can be determined for any time t during free-fall.

The conic section concept utilized for navigation requires the computation of trajectory segments under a wide variety of constraints. Depending on the constraints involved, the set of universal equations will solve

1 - Kepler's Problem given r_0, v_0, and Δt, solve for r_f, v_f

2 - Lambert's Problem given r_0, r_f, and Δt, solve for conic parameters.

3 - Time - Theta Problem given r_0, v_0, and θ, solve for Δt.

4 - Time - Radius Problem given r_0, v_0, and r_f, solve for Δt.

where:

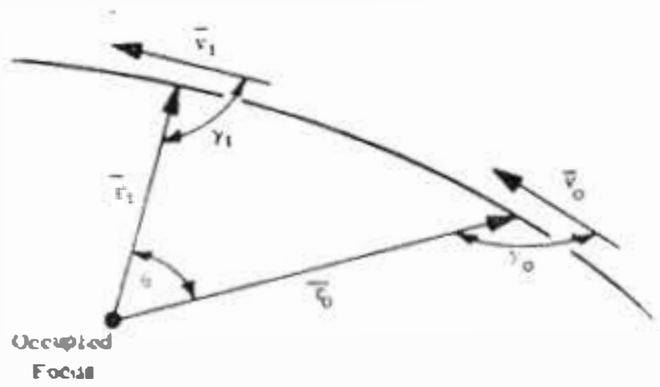

f = true anomaly measured from pericenter

Δt = flight time from r_0 to r_f

p = semilatus rectum

$\alpha = 1/a$ a = semimajor axis

γ = flight path angle

θ = true anomaly difference ($f_1 - f_0$)

The equation set used for solution of the above problem is

12. $\sqrt{\mu}\,\Delta t = p^{3/2} \cot\gamma_0\, x^2\, C(\alpha x^2) + (1 - r_0\alpha)\, x^3\, S(\alpha x^2) + r_0 x$

13. $\cot\frac{\theta}{2} = \frac{r_0 \left(1 - \alpha x^2 S(\alpha x^2)\right)}{p \times C(\alpha x^2)} + \cot\gamma_0$

14. $\frac{p}{r_0} = \frac{1 - \cos\theta}{\frac{r_0}{r_f} - \cos\theta + \sin\theta \cot\gamma_0}$

15. $\frac{1}{\mu} \cdots$

17. $r\alpha = 2 - \frac{p}{r}(1 + \cot^2\gamma)$

18. $\cot\frac{\theta}{2} = \frac{\cot\gamma_0 - \frac{r_0}{r_f}\cot\gamma_0}{\left(1 - \frac{r_0}{r_f}\right)}, \quad r_0 \neq r_f$

19. $\frac{p}{r_0} = \frac{2\left(\frac{r_0}{r_f} - 1\right)}{\left(\frac{r_0}{r_f}\right)\left(1 + \cot\gamma_0\right) - \left(1 + \cot^2\gamma_0\right)}$

20. $r_f = \left(1 - \frac{x^2}{r_0} C(\alpha x^2)\right) r_0 + \Delta t - \frac{x^3}{\sqrt{\mu}} S(\alpha x^2)\, v_0$

21. $v_f = \frac{\sqrt{\mu}}{r_0 r_f}\left(\alpha x^3 S(\alpha x^2) - x r_0 + r_0\right) - \frac{x^2}{r_f} C(\alpha x^2)\, v_0$

22. $\cot\gamma = \frac{r \cdot v}{|r \times v|}$

The iteration is performed as follows:

1 Kepler's Solution. Compute $r_0\alpha$ using Equation 16; compute x using Equation 12; and $p = \cot\gamma_0 = \frac{r_0 \cdot v_0}{\sqrt{\mu}}$; compute r_f and v_f using Equations 20 and 21.

2 Lambert's Solution. Solve for $\cot\gamma_0$ and $r_0\alpha$ using Equations 18 and 17; compute x using Equation 14 iteratively; and compute Δt using Equation 12. If Δt does not agree with the desired Δt, adjust $\cot\gamma_0$ and repeat.

3 Time - Theta Solution. Assume $\cot\gamma_0$, $r_0\alpha$, and $p = r_0$ using Equations 22, 16, and 17; solve for x using Equation 14 iteratively; and compute Δt using Equation 12.

4 Time - Radius Solution. Assume $r_0\alpha$, $p = r_0$, and $\cot\gamma_0$ using Equations 22, 16, 17, and 17; compute $\cot\frac{\theta}{2}$ using [illegible] Equation 18; and Δt using Equation 12.

D. DISTURBANCE ACCELERATIONS

So far the planet in question has been assumed to be spherical which is not the case for either the earth or the moon. Nor have the effects of the sun and the moon on the earth or vice versa been considered. Therefore, Equation 1 must be modified as follows

$$\frac{d^2 \vec{r}}{dt^2} + \frac{\mu}{r^3} \vec{r} = \vec{a}_d \qquad (23)$$

where

$\vec{a}_d$ is the disturbance acceleration due to

1. oblateness of the earth or the nonspherical shape of the moon depending on which reference body is used.
2. the effects of the sun.
3. the effects of the secondary body on the primary body; that is, effects of moon on earth if earth is primary body and vice versa.

Analytical expressions for $\vec{a}_d$ are given in R-577, Section 5. Since $\vec{a}_d$ is small in comparison to $\frac{\mu}{r^3}$, the two-body orbit given by Equation 1 is used as a reference or osculating orbit which is perturbed by $\vec{a}_d$. The actual position and velocity vectors are, therefore, given by

$$\vec{r} = \vec{r}_c + \vec{\delta}$$

$$\vec{v} = \vec{v}_c + \vec{\sigma} \qquad (24)$$

where

$\vec{r}_c$ and $\vec{v}_c$ are the position and velocity of the two-body conic solutions,

$\vec{\delta}$ and $\vec{\sigma}$ are the deviations from the two-body conic solutions of position and velocity, respectively.

Differentiating Equation 24 and substituting into Equation 23 gives the following expression for the differential acceleration

$$\frac{d^2 \vec{\delta}}{dt^2} = \frac{\mu}{r_c^3} \left[\left[1 - \frac{r_c^3}{r^3} \right] \vec{r} - \vec{\delta} \right] + \vec{a}_d \qquad (25)$$

subject to the initial conditions

$$\vec{\delta}(t_o) = 0, \quad \frac{d\vec{\delta}}{dt}(t_o) = \vec{\sigma}(t_o) = 0$$

This method (Equation 25) is known as Encke's method of differential accelerations.

Since the coefficient of $\vec{r}$ in Equation 25 requires the subtraction of nearly equal quantities, prohibitive errors are introduced by solving Equation 25 in its present form. This difficulty can be overcome by making the substitution

$$\left(1 - \frac{r_c^3}{r^3} \right) = \frac{\vec{r}}{r^2} \left(1 + \frac{\rho^2}{1 + \rho} \right) \{ (\vec{r}_c + \vec{r}) \cdot \vec{\delta} \} \quad \text{where} \quad \rho = r_c / r$$

Equation 25, therefore, becomes

$$\frac{d^2 \vec{\delta}}{dt^2} = \frac{\mu}{r_c^3} \left\{ \frac{\vec{r}}{r^2} \left(1 + \frac{\rho^2}{1 + \rho} \right) \left[(\vec{r}_c + \vec{r}) \cdot \vec{\delta} \right] - \vec{\delta} \right\} + \vec{a}_d \qquad (26)$$

Equation 26 can be solved by any number of numerical integration schemes. The method used in the Apollo Guidance Computer (AGC) is the Nystrom method.

In order to maintain the efficiency of Encke's method of differential accelerations, $\vec{\delta}$ (t) must remain small. Therefore, a new osculating conic must be defined by the total position and velocity vectors $\vec{r}$ (t) and $\vec{v}$ (t) when $\vec{\delta}$ (t) reaches a predetermined limit. The process of selecting a new conic orbit from which to calculate deviations is called rectification.

To sum up, the position and velocity, during freefall, at time t_2, given the position and velocity at time t_1, are computed as follows:

1. Position and velocity in the osculating orbit at time t_2 are calculated according to Equations 9 and 10.
2. Deviations are then obtained by numerical integration of Equation 26.
3. A new conic from which to calculate deviations is defined each time the deviations ($\vec{\delta}$ (t)) reach a predetermined limit.

E. DISTURBING FUNCTIONS AND THEIR APPLICABILITY

We define the following disturbance accelerations as applicable to Apollo:

$\vec{a}_{dE}$ = acceleration due to the nonspherical gravitational perturbations of the earth

$\vec{a}_{dm}$ = acceleration due to the nonspherical gravitational perturbations of the moon

$\vec{a}_{dq}$ = acceleration due to the secondary body on the primary body: that is, moon is secondary body when earth is used as reference and vice versa

$\vec{a}_{ds}$ = acceleration due to the sun

analytical expressions for which are given in R-577, Section 5.

The applicable disturbance accelerations and their region of applicability for Apollo are given in Figure 3.

R_{Earth} = 3,441 nmi
R_1 = 3,660 nmi
$R_1 + R_2$ = 43,452 nmi
R_{Moon} = 938 nmi
R_5 = 1,154 nmi
$R_6 + R_5$ = 8,690 nmi
R_{SPH} = 34,761 nmi

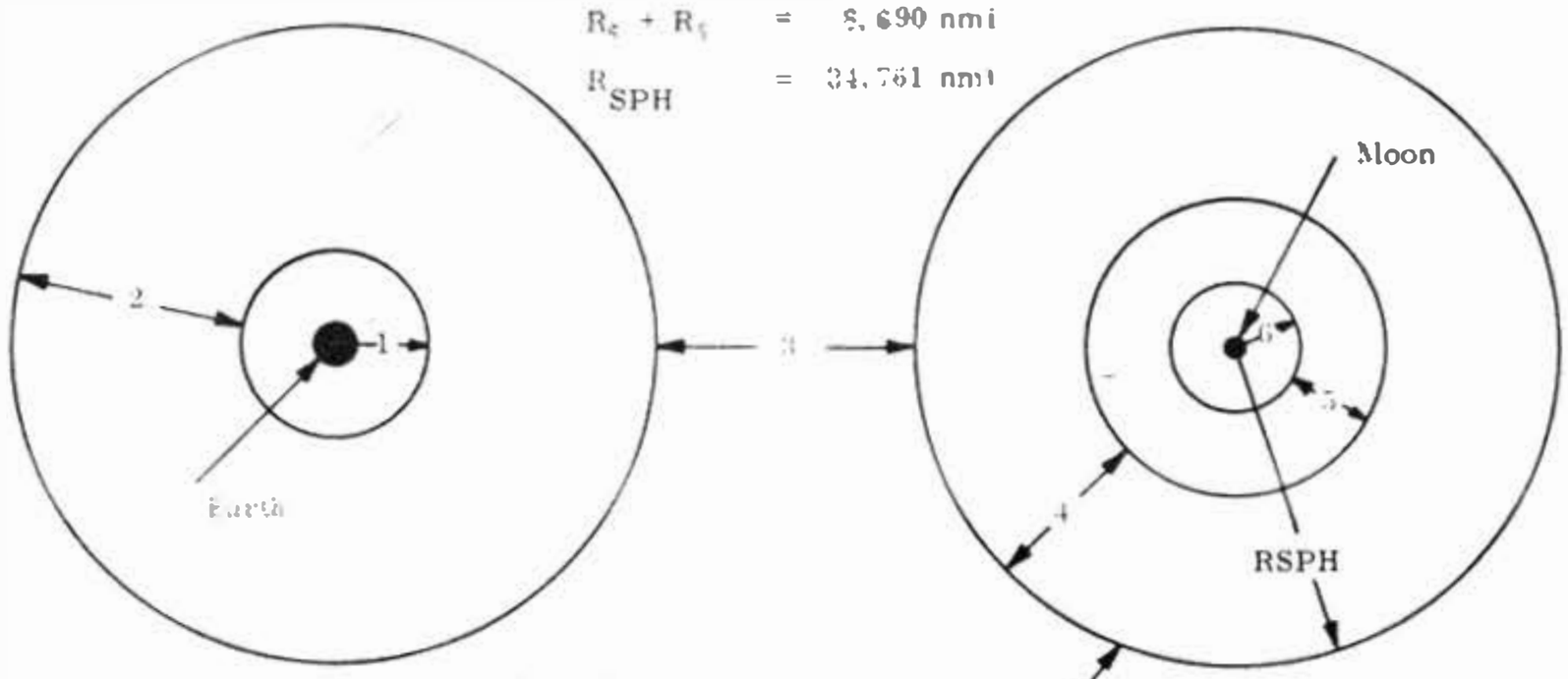

Region 1. $\vec{a}_d = \vec{a}_{dE}$
Region 2. $\vec{a}_d = \vec{a}_{dE} + \vec{a}_{ds} + \vec{a}_{dqm}$
Region 3. $\vec{a}_d = \vec{a}_{ds} + \vec{a}_{dqm}$
Region 4. $\vec{a}_d = \vec{a}_{ds} + \vec{a}_{dqE}$
Region 5. $\vec{a}_d = \vec{a}_{dm} + \vec{a}_{ds} + \vec{a}_{dqE}$
Region 6. $\vec{a}_d = \vec{a}_{dm}$

Figure 3. Apollo Disturbance Acceleration Regions

F. DISTURBANCE ACCELERATION/OSCULATING ELEMENTS

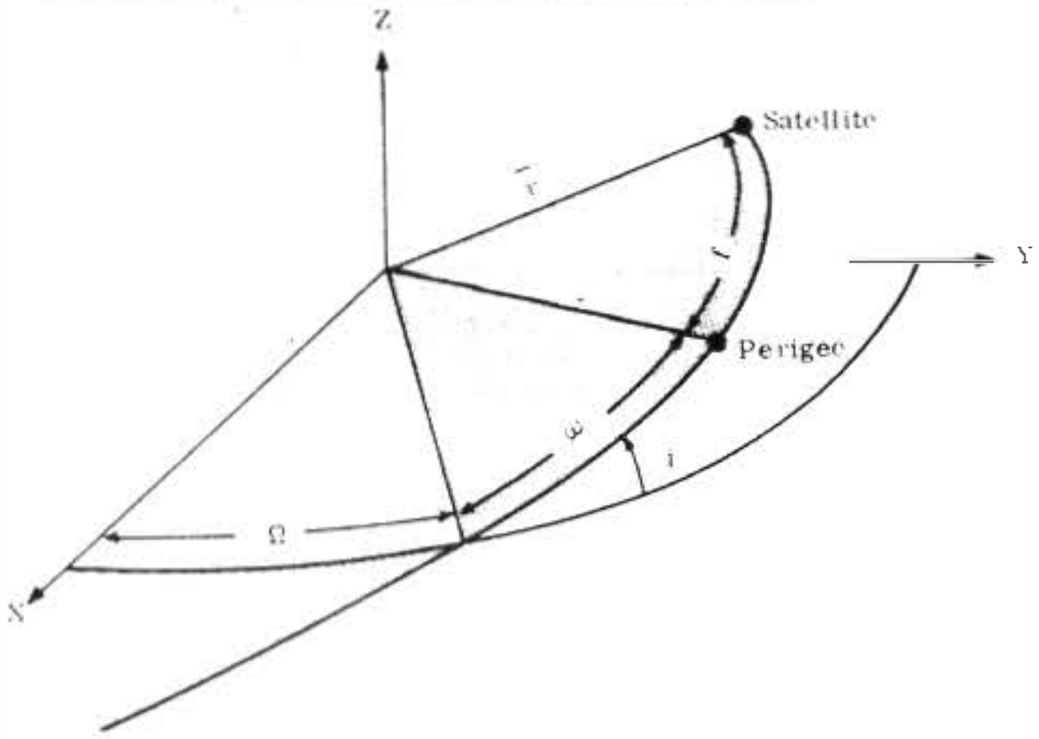

- a = Semimajor Axis (ft)
- e = Eccentricity
- i = Orbital Inclination
- f = Central Angle From Perigee
- r = Position (ft)
- Ω = Longitude of the Ascending Node
- ω = Argument of Perigee
- n = Mean Motion $= \sqrt{\frac{\mu}{a^3}}$ s^{-1}
- $\mu E = 1.41 \times 10^{17}$ ft^3/s^2
- $\mu M = 1.73 \times 10^{15}$ ft^3/s^2
- N, R, T = ft/s^2

Acceleration Normal To Orbital Plane (N)

$$\frac{da}{dt} = \frac{de}{dt} = 0$$

$$\frac{di}{dt} = \frac{r\cos(\omega + f)}{na^2\sqrt{1-e^2}}\,N$$

$$\frac{d\Omega}{dt} = \frac{r\sin(\omega + f)}{na^2\sqrt{1-e^2}\sin(i)}\,N$$

$$\frac{d\omega}{dt} = -\cos(i)\frac{d\Omega}{dt}\,N$$

Acceleration Along Radial Line (R)

$$\frac{da}{dt} = \frac{2e\sin(f)}{n\sqrt{1-e^2}}\,R$$

$$\frac{de}{dt} = \frac{\sqrt{1-e^2}\sin(f)}{na}\,R$$

$$\frac{di}{dt} = \frac{dr}{dt} = 0$$

$$\frac{d\omega}{dt} = -\frac{\sqrt{1-e^2}\cos(f)}{nae}\,R$$

Acceleration Along Track (T)

$$\frac{da}{dt} = \frac{2a\sqrt{1-e^2}}{nr}\,T$$

$$\frac{de}{dt} = \frac{\sqrt{1-e^2}}{na^2e}\left[\frac{a^2(1-e^2)}{r} - r\right]T$$

$$\frac{di}{dt} = \frac{dr}{dt} = 0$$

$$\frac{d\omega}{dt} = \frac{\sqrt{1-e^2}}{nae}\left(\frac{2 + e\cos(f)}{1 + e\cos(f)}\right)\sin(f)\,T$$

C. TPI TARGETING

The TPI targeting for the Apollo 15 mission is accomplished using the equations and techniques stated below utilizing the following information:

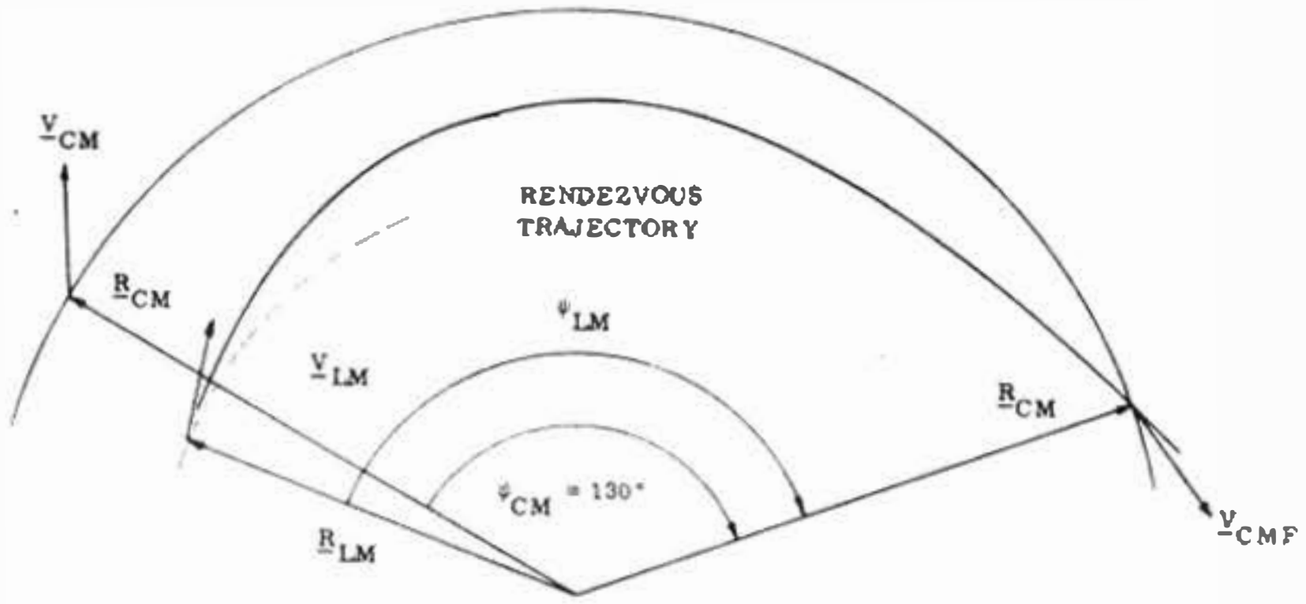

T_1 - time at which the TPI maneuver is to be performed

$\underline{R}_{LM}$ - LM position vector at T_1

$\underline{V}_{LM}$ - LM velocity vector at T_1

$\underline{R}_{CM}$ - CSM position vector at T_1

$\underline{V}_{CM}$ - CSM velocity vector at T_1

ϕ_{CM} - central angle CSM will traverse between TPI and rendezvous (130° nominally)

Targeting Procedure:

1. Compute the elevation angle of the LM-CSM LOS above the LM horizontal plane at the time of TPI.

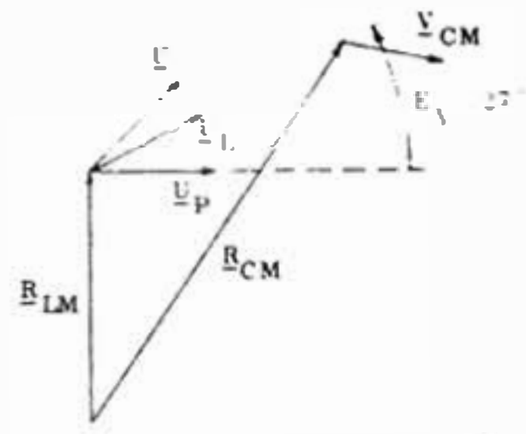

$$E_A = \cos^{-1}\left[\underline{U}_L \cdot \underline{U}_P \, SGN\left(\underline{U}_P \cdot \underline{U} \times \underline{R}_{LM}\right)\right]$$

where:

$$\underline{U}_L = \text{unit}\left[\underline{R}_{CM} - \underline{R}_{LM}\right]$$

$$\underline{U} = \text{unit}\left[\underline{R}_{LM} \times \underline{V}_{LM}\right]$$

$$\underline{U}_P = \text{unit}\left[\frac{\underline{U}_L - \left(\underline{U}_L \cdot \underline{R}_{LM}\right)\underline{R}_{LM}}{\left|\underline{R}_{LM}\right|^2}\right]$$

if $\varepsilon_A < 0°$ define $E_A = 2\pi - \varepsilon_A$

2. Compute the time (t_{21}) required for the CSM to travel through the central angle ψ_{CM} using the Time-Theta method described on page SC-51.

3. Update the state vector of the CSM to the time of rendezvous ($\Delta T = t_{21}$) using Kepler's method as described on page SC-51 obtaining ($\underline{R}_{CMF}$, $\underline{V}_{CMF}$).

4. Compute the central angle (ψ_{LM}) through which the LM must traverse between its position at TPI and the CSM's position at rendezvous.

$$\psi_{LM} = SGN\ (\underline{R}_{LM} \times \underline{R}_{CMF} \cdot \underline{U})\ \cos^{-1}\ (\underline{R}_{LM} \cdot \underline{R}_{CMF})$$

if $\psi_{LM} < 0°$ define $\psi_{LM} = \psi_{LM} + 2\pi$

5 Using the Time-Theta method, determine the flight path angle γ required of the LM at the end of the TPI burn such that the time required by the LM to traverse the central angle of ψ_{LM} is the same as t_{21}.

6. Calculate the velocity to be gained.

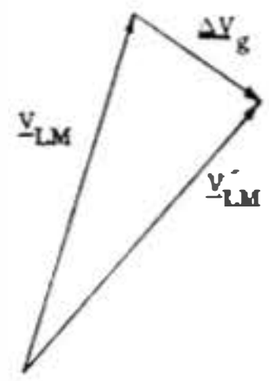

$$\underline{\Delta V}_g = \underline{V}'_{LM} - \underline{V}_{LM}$$

where:

$$\underline{V}'_{LM} = \sqrt{\frac{P\mu}{R_{LM}}}\ (\cot\gamma \cdot \text{unit}\ \underline{R}_{LM} + \underline{U}_N \times \text{unit}\ \underline{R}_{LM})$$

P = semilatus rectum of the TPI orbit

$$\underline{U}_N = \text{unit}\ \left[\text{unit}\ \underline{R}_{CMF} \cdot \text{unit}\ \underline{R}_{LM}\right]$$

The velocity to be gained is burned out using the APS and Lambert Aimpoint Guidance.

HARDWARE

PIPA
COARSE ALIGN - FINE ALIGN
ECDU
IRIG
OPTICS
OUA
AOT

PIPA LOOP

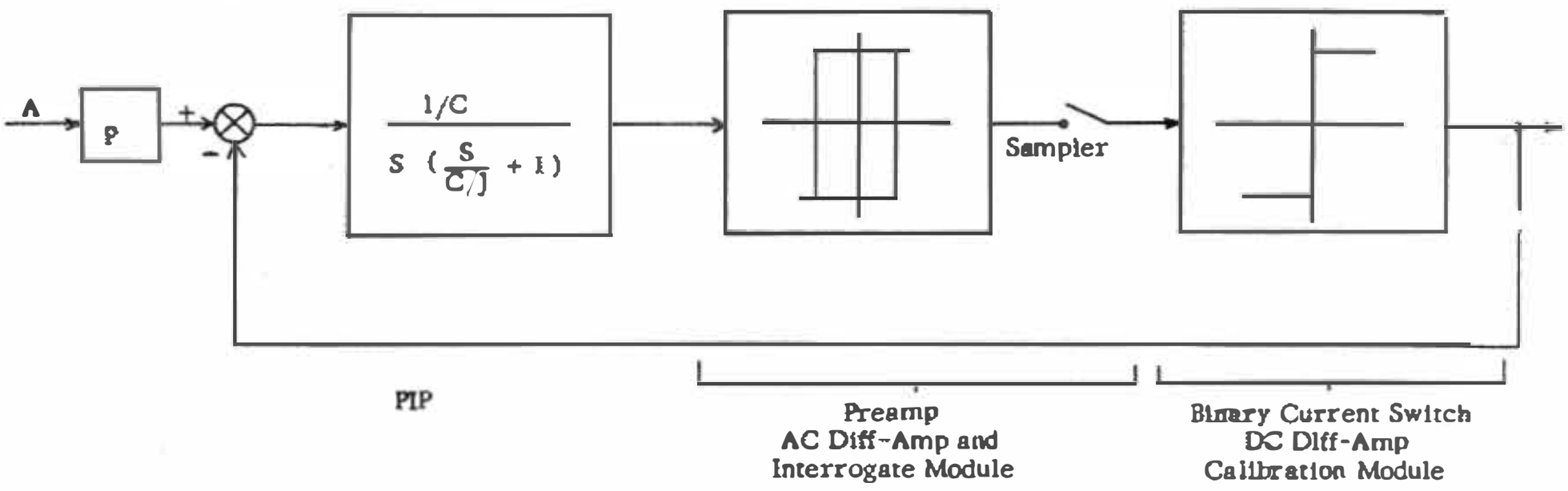

P = Pendulosity
C = Coefficient of Viscous Damping
J = Float Inertia

The PIP Signal Generator Ducosyn provides information on rotor position in the form of a 3200 hertz output. The stable limit cycle in rotor position is converted to an AC suppressed carrier modulated signal.

The PIP Preamp amplifies the SG output (14 V/V gain) and phase shifts the 3200 hertz carrier 45^0 lag.

The AC Diff-Amp and Interrogate Module provides additional amplification (3050 V/V), peak detects float position, and sets a flip-flop. One state of the flip-flop indicates float position on the plus side of null and the other state means float position on the minus side of null.

The Binary Current Switch provides discrete current pulse outputs of appropriate phase as determined by the state of the flip-flop in the AC Diff-Amp Module.

The Calibration Module is the passive circuit interface between the BCS and the PIP torquer. The circuitry introduces bias and scale factor adjust capability into the PIPA loop.

The PIP Torque Ducosyn converts current pulses from the Calibration Module to torque about the PIP OA axis.

The DC Diff-Amp and PVR Module is the mechanism which regulates current and hence PIP torque to precisely controlled values.

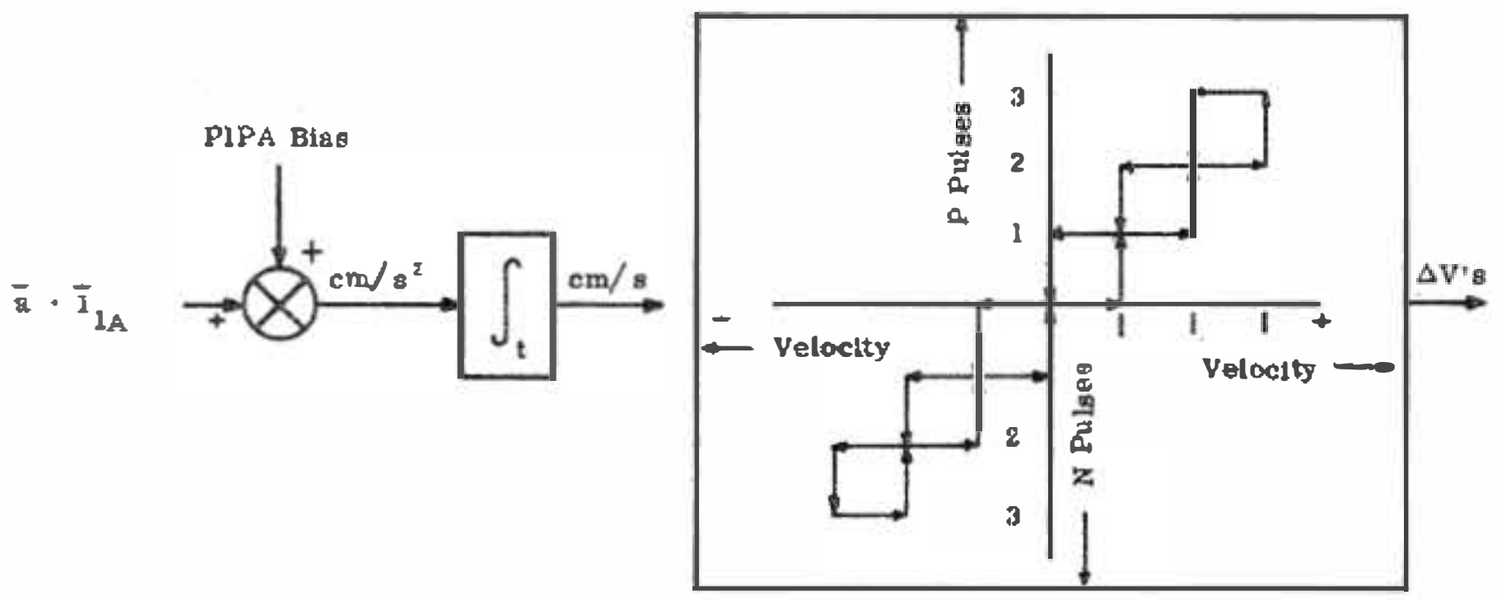

Each ΔV Command Module ≈ 5.85 cm/s
Each ΔV Lunar Module ≈ 1.90 cm/s

PIPA CHARACTERISTICS

	PARAMETER		CM		LM	
1.	Maximum measurable acceleration		19.1	g's	3.26	g's
2.	Scale factor		5.85	cm/sec/pulse	1.00	cm/sec/pulse
3.	Pendulosity	P	0.25	$\frac{\text{dyne cm}}{\text{cm/sec}^2}$	0.25	$\frac{\text{dyne cm}}{\text{cm/sec}^2}$
4.	Torque to balance	T	4680	dyne cm	800	dyne cm
5.	PIP float inertia	J	14.0	$\frac{\text{dyne cm}}{\text{rad/sec}^2}$	14.0	$\frac{\text{dyne cm}}{\text{rad/sec}^2}$
6.	PIP viscous damping	C	12×10^4	$\frac{\text{dyne cm}}{\text{rad/sec}}$	12×10^4	$\frac{\text{dyne cm}}{\text{rad/sec}}$
7.	PIP break point	C/J	8550	rad/sec	8550	rad/sec
8.	PIP time constant	J/C	.117	ms	.117	ms
9.	Total torque constant		.42	dyne cm/ma^2	.42	dyne cm/ma^2
10.	Nominal torque current		105	ma	44	ma

SUSPENSION CHARACTERISTICS

1.	Radial Force	2.3 grams per .0001" min
2.	Suspension current	65 ± 6 ma the two ends (SG & TG) matched with 3 ma
3.	Phase angle of current	lags 45° ± 2.8°
4.	Suspension stiffness	30×10^{-3} grams/micro-inch

TYPICAL TEMPERATURE CHARACTERISTICS

1.	Scale Factor	150 ppm/°F 300 ppm/°F	CM LM
2.	Bias	.05 cm/sec^2/°F	LM/CM

°F Actual PIPA Temperature

PIPA PARAMETERS

Primary PIPA parameters are scale factor and bias. Specification values across ISS, G&N, and S/C testing are as shown in Table I-1.

Table I-1

PIPA Coefficient Stability Criteria				
Coefficient	Units	D_1	D_2	D_3
PIPA Bias (A_B)	cm/sec^2	0.50	0.70	0.90
PIPA Scale Factor SF	ppm	400	500	600

PIPA bias in a unity gravity field (A_b) must be within 0.30 cm/sec^2 of that evaluated in a zero gravity (a_b) field at the ISS level of test.

The maximum value of PIPA parameters which can be compensated for by the computer is as shown in Table I-2.

Table I-2

Coefficient	Units	Max Value (CM)	Max Value (LM)
A_b	cm/sec^2	±9.14	±12.50
SF	ppm	±1900	±1900

PIPA COMPENSATION

	Register
X PIPA Bias	1452
Y PIPA Bias	1454
Z PIPA Bias	1456

PIPA Bias CM = (.0005569) (Reg Contents in Decimal) cm/sec^2
PIPA Bias LM = (.0007628) (Reg Contents in Decimal) cm/sec^2

The correction to the PIPA's is

$$PIPA_C = (1 + SFE_I)\, PIPA_I - BIAS_I \Delta t$$

where

$PIPA_C$ is the compensated data for the Ith PIPA denoted $PIPAX_C$, $PIPAY_C$, $PIPAZ_C$

$$SFE = \frac{SF - SF_{nom}}{SF_{nom}} \quad \text{(erasable load)}$$

SF = Scale-factor $\frac{CM/Sec}{Pulse}$

$BIAS_I$ is the bias for the Ith PIPA (an erasable load)

C/3 indicates assets common to all three loops.

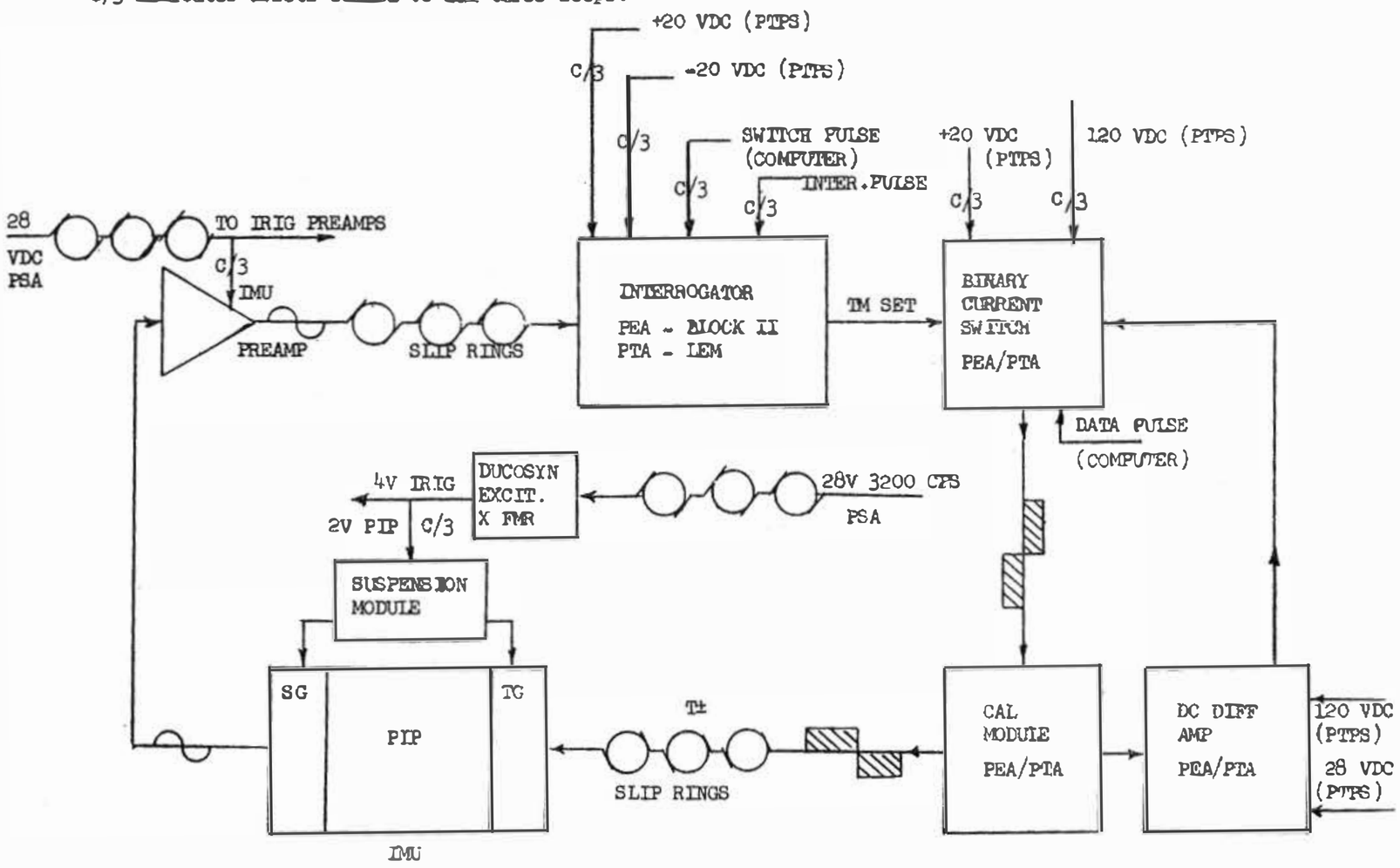

PTPS = Pulse Torque Power Supply. For Block II PTPS is in the PSA
For LEM PTPS is in the PTA
PEA = PIPA Electronics Header Assembly (CM); PTA = Pulse Torque Header Assembly (LEM).

PIPA LOOP

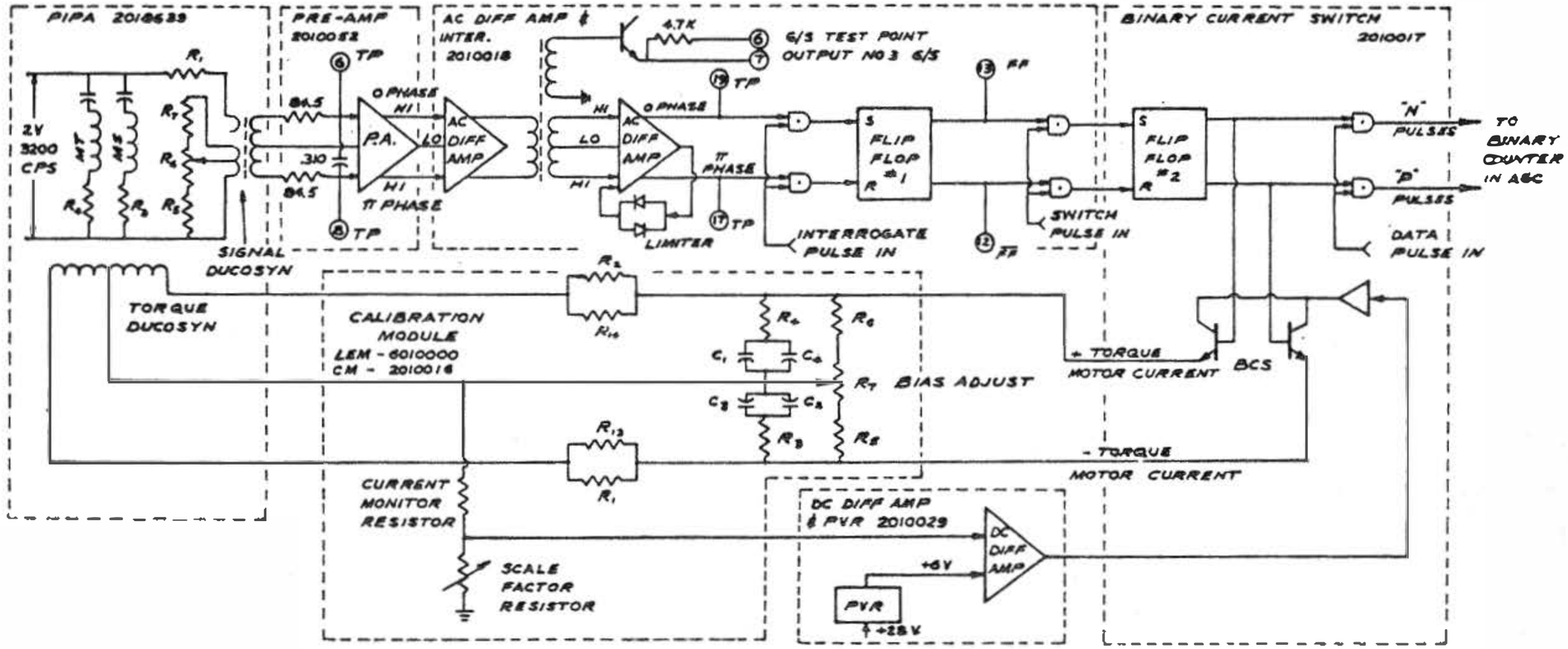

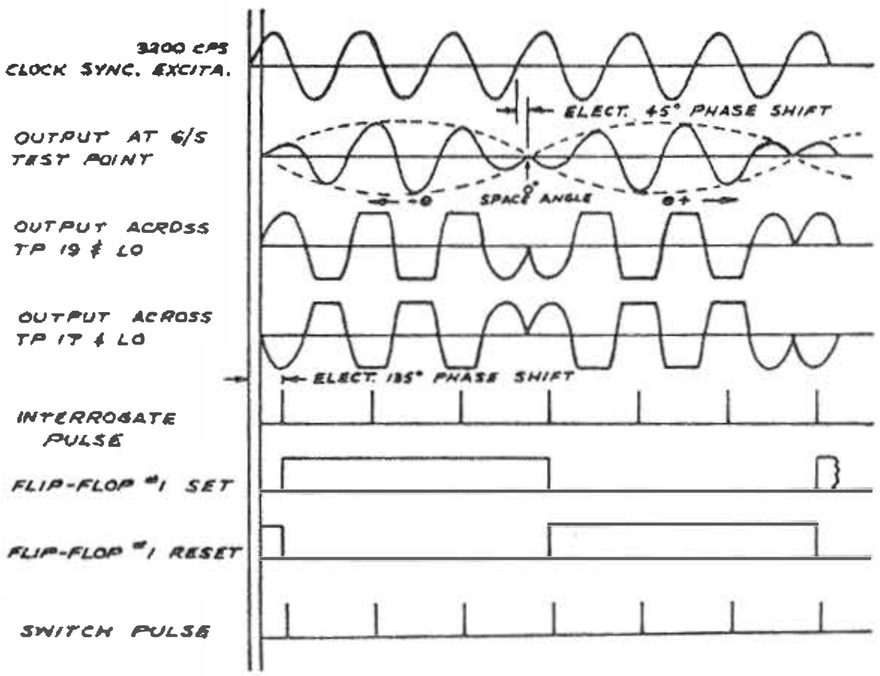

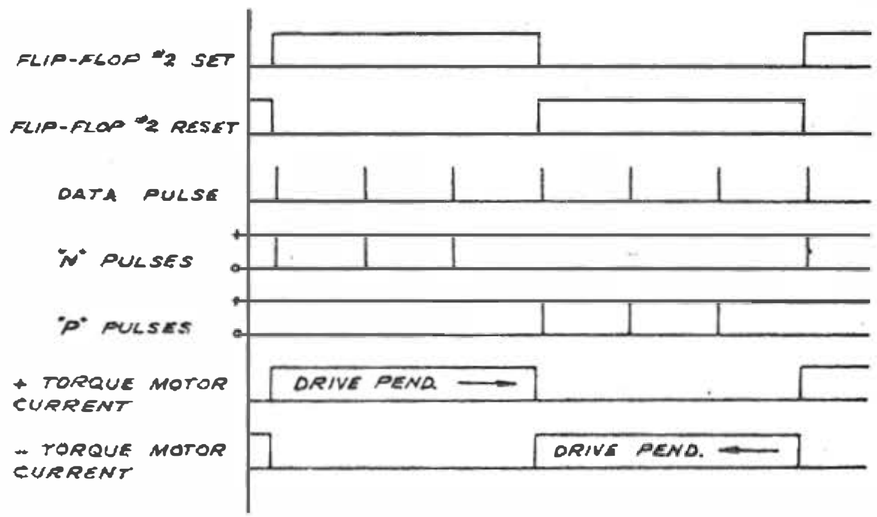

PIPA LOOP TIME LINE FOR A 3:3 MODING CYCLE

AC DIFF AMP & INTERROGATOR

P/N 2010018

NOTE: TRANSISTORS ARE 2N2980 UNLESS OTHERWISE SPECIFIED

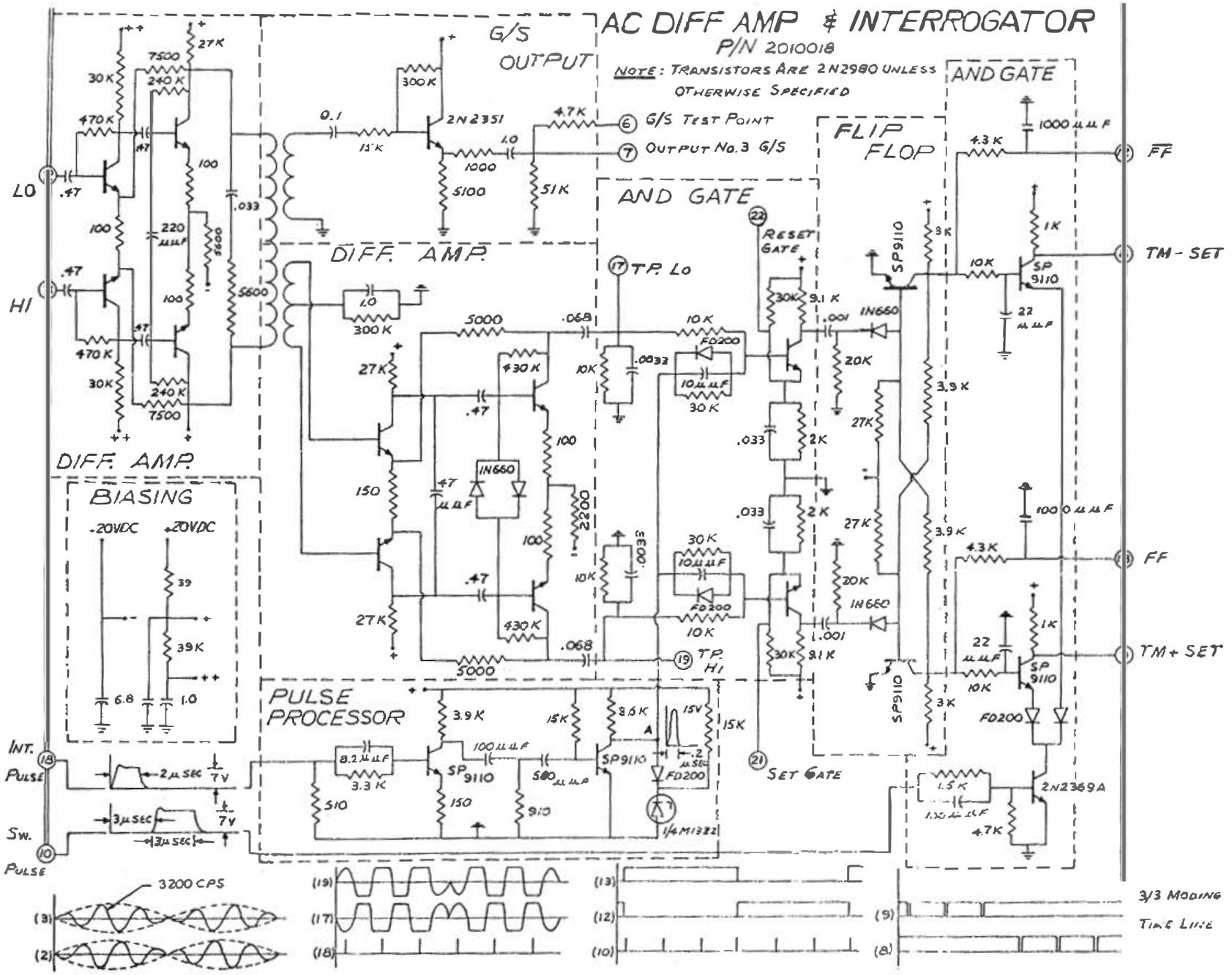

HW-6A

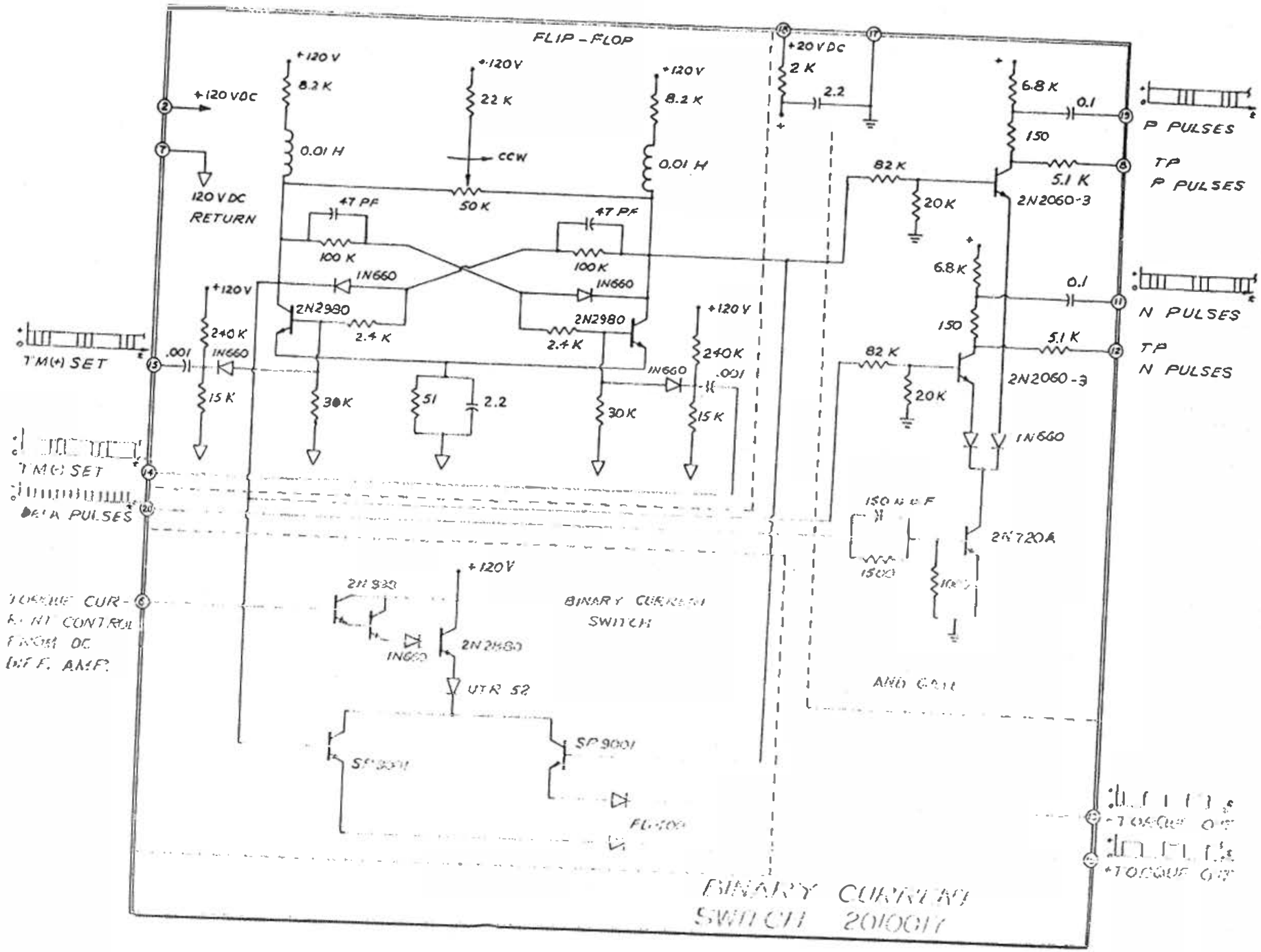
FLIP-FLOP
+120 VDC
120 VDC RETURN
+120 V
8.2 K
0.01 H
22 K
CCW
50 K
47 PF
100 K
1N660
2N2980
2.4 K
240 K
15 K
30 K
51
2.2
.001
TM(+) SET
TM(-) SET
DELA PULSES
TORQUE CURRENT CONTROL FROM DC DIFF. AMP.
+20 VDC
2 K
6.8 K
0.1
150
5.1 K
82 K
20 K
2N2060-3
P PULSES
TP P PULSES
N PULSES
TP N PULSES
2N720A
AND GATE
BINARY CURRENT SWITCH
UTR 52
SP 9001
BINARY CURRENT SWITCH 2010017

HW-6B

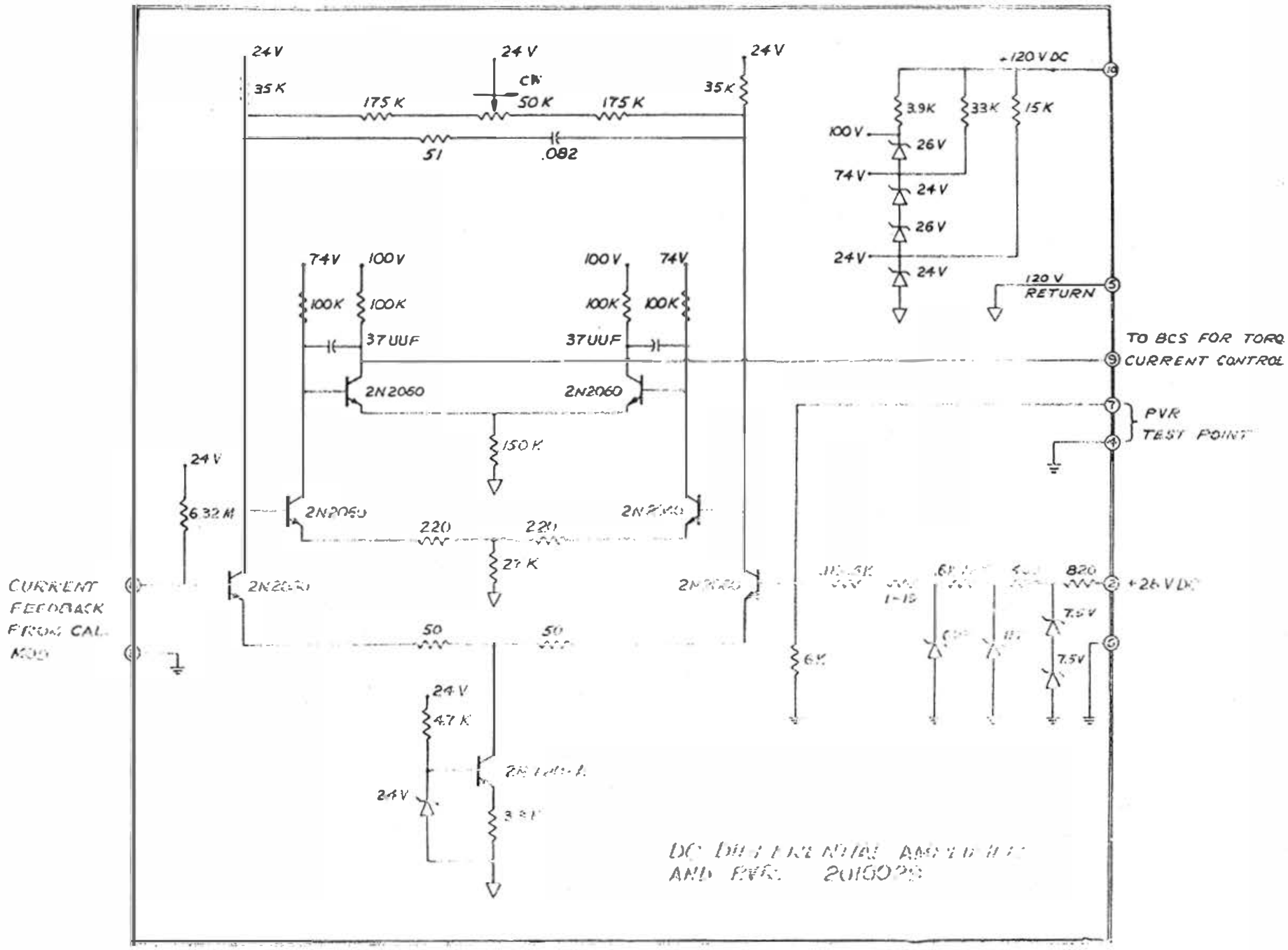
24V
35K
175K
CW
50K
175K
35K
24V
51
.082
+120 V DC
3.9K
33K
15K
100V
26V
74V
24V
26V
24V
24V
120 V
RETURN
74V
100V
100K
100K
37UUF
2N2060
150K
TO BCS FOR TORQ
CURRENT CONTROL
PVR
TEST POINT
24V
6.32M
220
27K
CURRENT
FEEDBACK
FROM CAL.
MOD
50
50
6K
820
+28 V DC
7.5V
7.5V
24V
4.7K
24V
DC DIFFERENTIAL AMPLIFIER
AND PVR. 2010029

HW-6C

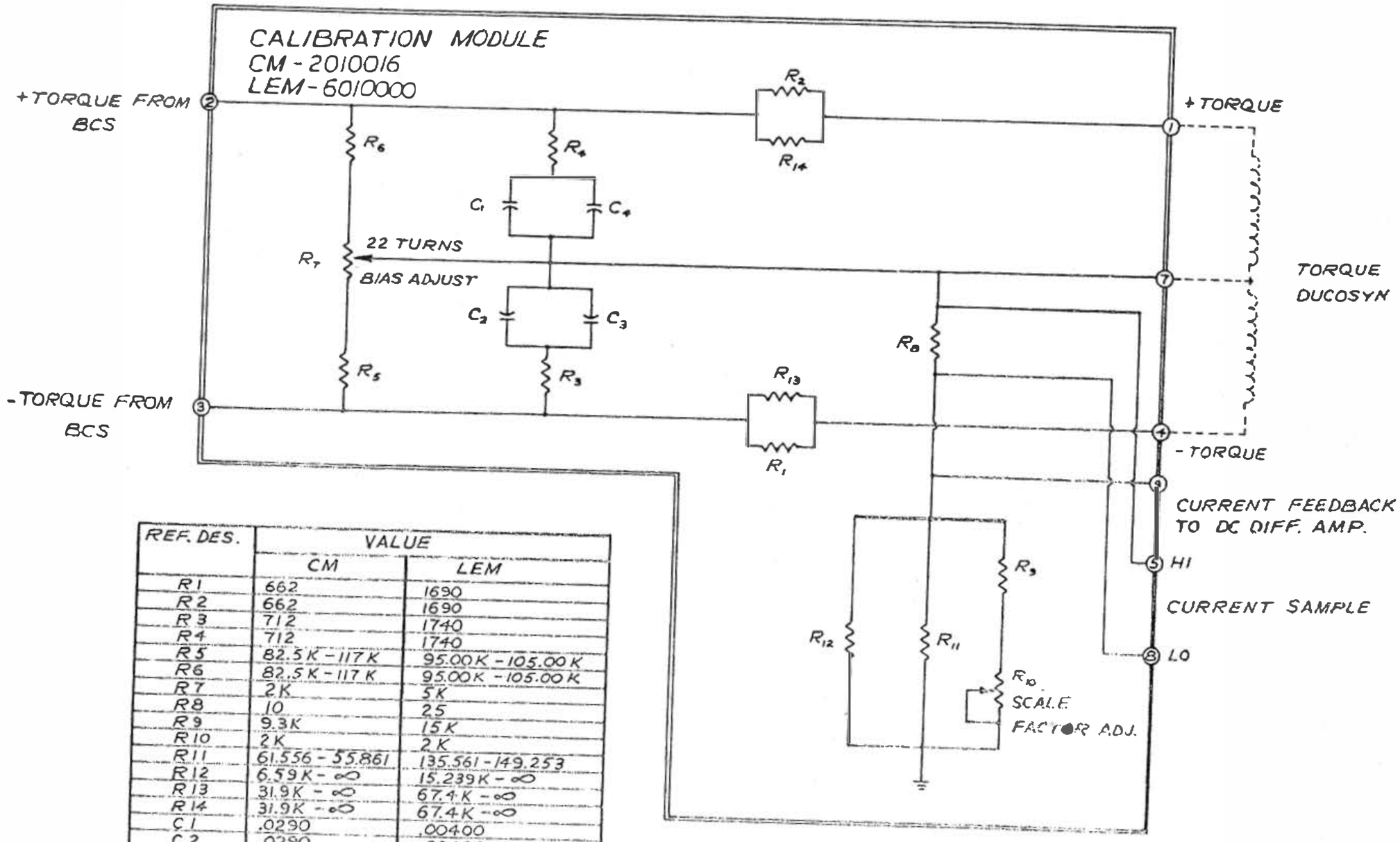

REF. DES.	VALUE	
	CM	LEM
R1	662	1690
R2	662	1690
R3	712	1740
R4	712	1740
R5	82.5K - 117K	95.00K - 105.00K
R6	82.5K - 117K	95.00K - 105.00K
R7	2K	5K
R8	10	25
R9	9.3K	15K
R10	2K	2K
R11	61.556 - 55.861	135.561 - 149.253
R12	6.59K - ∞	15.239K - ∞
R13	31.9K - ∞	67.4K - ∞
R14	31.9K - ∞	67.4K - ∞
C1	.0290	.00400
C2	.0290	.00400
C3	.0100 - .0228	.00260 - .00458
C4	.0100 - .0228	.00260 - .00458

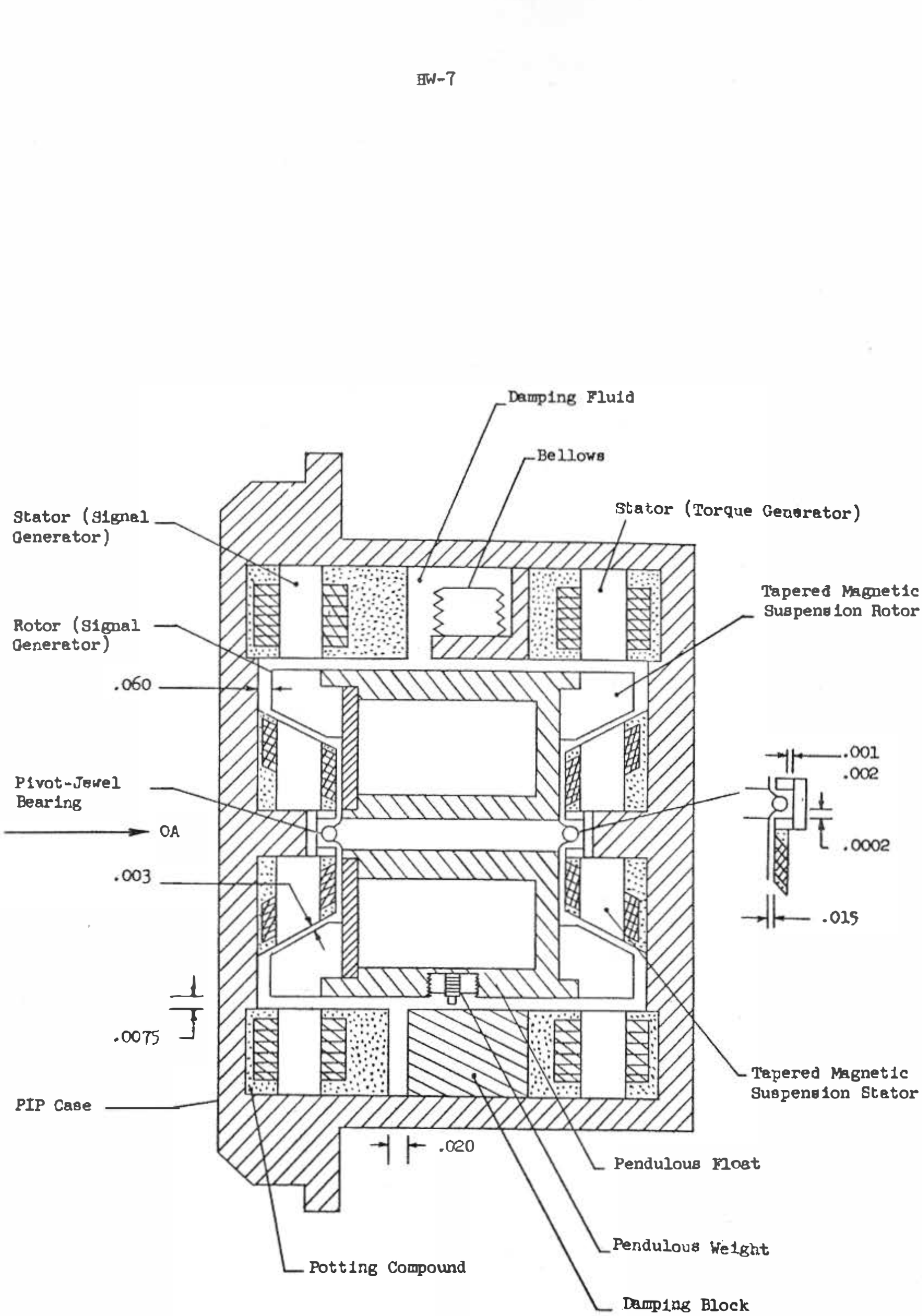
Damping Fluid
Bellows
Stator (Signal Generator)
Stator (Torque Generator)
Tapered Magnetic Suspension Rotor
Rotor (Signal Generator)
.060
Pivot-Jewel Bearing
OA
.003
.0075
PIP Case
.020
.001
.002
.0002
.015
Tapered Magnetic Suspension Stator
Pendulous Float
Pendulous Weight
Potting Compound
Damping Block

APOLLO PIP

PIPA DEADZONE

Digital interrogation of PIPA float position with zero acceleration applied will generally yield 3 clock pulses for each half cycle of float position. This is called 3:3 moding.

During initial build-up, torque unbalance is minimized by artificially inducing 2:2 or 4:4 moding and adjusting the zero g null to coincidence with the 3:3 moding zero g null. The null coincidence between a stable 2:2 and a stable 3:3 null must be less than 20 arc seconds in build-up (Figure 1).

PIPA near null operation at PIPA level testing.

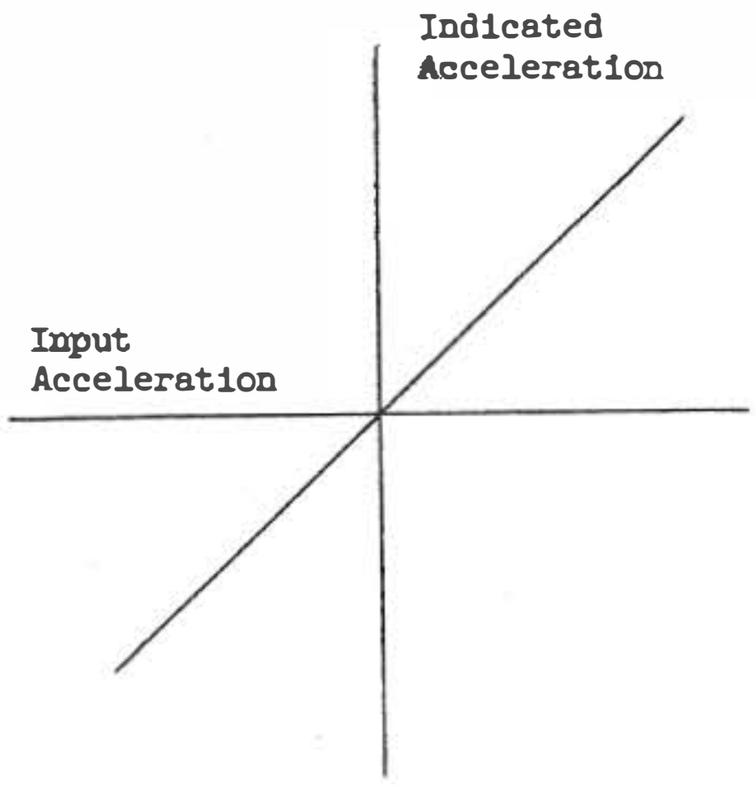

Solid 3:3 moding PIPA

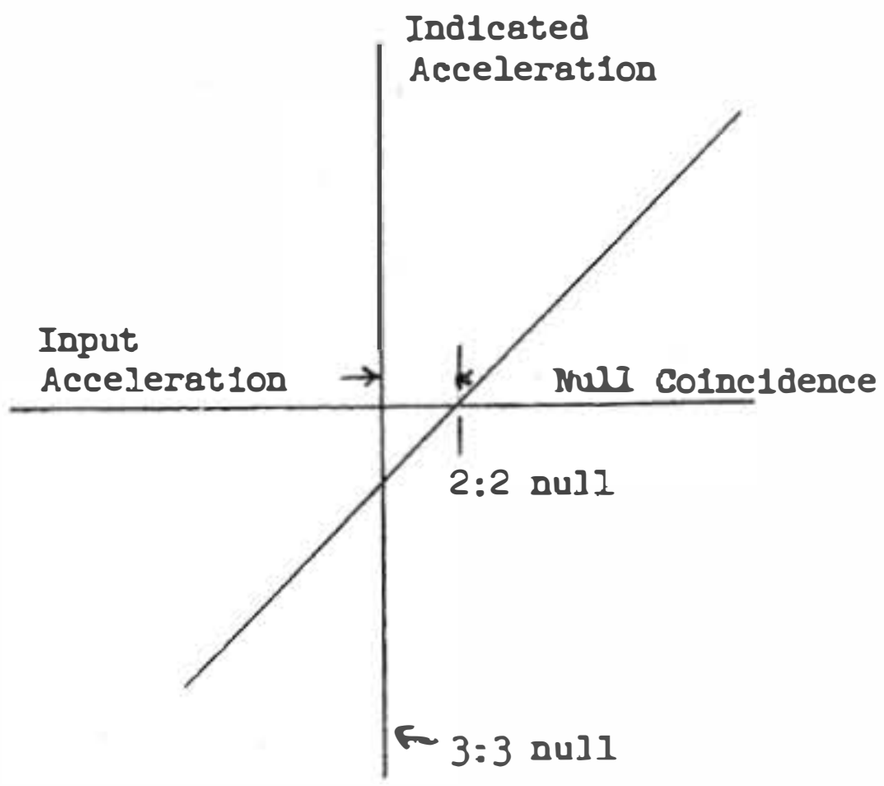

Solid 2:2 moding PIPA
(2:2 mode artificially achieved)

Figure 1

At higher levels of test, subtle changes in configuration due to integration of the PIPA loop into the G&N System can cause the PIPA to dual mode, i.e. the stable 3:3 mode may be replaced by a bistable 2:2 and 3:3 mode. Bistable moding causes no net delta V output and is manifest as a deadzone to near null inputs. This deadzone is checked at the ISS level of test to assure that it is less than 50 arc seconds (0.0075 ft/sec^2 or 0.23 cm/sec^2).

For an input acceleration of A_{33} (Figure 2), a dual moding PIPA will issue zero Δ V's and mode 3:3.

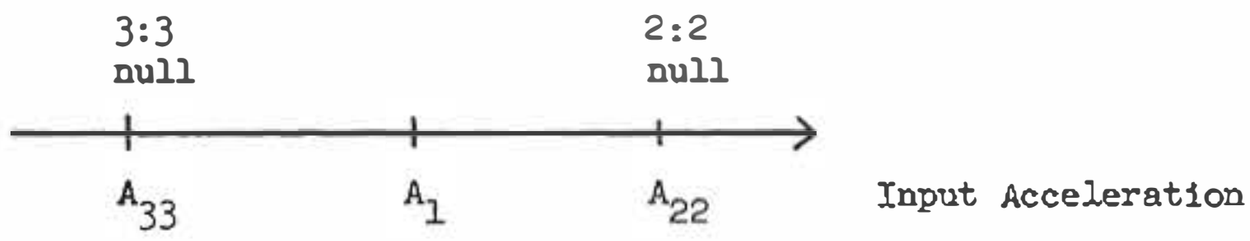

Figure 2

For an input acceleration of A_{22}, a dual moding PIPA will also issue zero Δ V's and mode 2:2. For an input acceleration between the A_{33} and A_{22} limits, the PIPA will issue zero Δ V's and dual mode from 2:2 to 3:3 at a rate of 5 or 6 times per second. The amount of time spent in 2:2 or 3:3 moding is dependent on the input acceleration A_1.

HISTORY OF IN-FLIGHT PIPA PERFORMANCE

		AVG IN-FLIGHT ERROR*	CHANGE FROM (PREFLIGHT) COMP	LUNAR ORBITAL DEVIATIONS	
				MINIMUM	MAXIMUM
Apollo 8	X	-0.01	-	No Lunar Orbital Variations Available	
	Y	+0.03	-		
	Z	+0.00	-		
Apollo 9	CM X	+0.02	+1.17	*** -0.39	-0.58
	Y	-0.04	+0.28	-0.32	-0.42
	Z	-0.08	-	+0.32	+0.42
	LM X	+0.01	-		
	Y	-0.15	-		
	Z	+0.01	-		
Apollo 10	CM X	0.0	-0.27	0.0	-0.36
	Y	0.0	-	0.0	-0.29
	Z	0.0	-	0.0	+0.03
	LM X	-0.06	-		
	Y	-0.12	-		
	Z	0.03	-		
Apollo 11	CM X	-	-	-0.07	-0.31
	Y	-0.02	+0.21	-0.25	+0.34
	Z	+0.03	-0.12	-0.01	+0.11
	LM X	-0.01	-		
	Y	+0.02	-0.06		
	Z	-0.03	-0.17		
Apollo 12	CM X	+0.09	-	0.0	+0.27
	Y	-0.05	-	-0.08	-0.20
	Z	0.0	-	-0.04	-0.25
**	LM X	-0.05	-0.05 Pre-DOI		
		0.0	-0.15 Post-Ascent		
	Y	0.0	0.0 Pre-DOI		
		0.0	-0.18 Post-Ascent		
	Z	0.0	-0.06 Pre-DOI		
		0.0	+0.29 Post-Ascent		
Apollo 13	CM X	-0.204	-		
	Y	-0.195	-		
	Z	+0.006	-1.63		
	LM X	+1.50	-		
	Y	-1.35	-		
	Z	-1.52	-		
Apollo 14	CM X	-0.02	-0.10	-0.34	-0.55
	Y	-0.02	+0.08	-0.18	0.12
	Z	-0.02	+2.77	-0.195	-0.45
	LM X	0.3	-		
	Y	-0.35	-		
	Z	-0.14	-		

*Deviations from compensation updates when made, or from preflight loads when no update was made. All units cm/s^2

**This IMU was turned off for ~27 hours on the lunar surface.

*** Earth orbit deviations.

NOTE: Variations of CM bias in lunar orbit caused by variations in coolant temperature.

IMU COARSE ALIGN LOOP

The coarse align loop drives the IMU gimbals to the angles commanded by the computer with an accuracy of ± 1.5°. The coarse align mode also acts as a caging mode when a gimbal lock condition is approached.

The three basic elements of the coarse align loop are the Digital Computer which issues angle commands ($\Delta\theta_C$) and moding discretes, the IMU, and the ECDU which encodes gimbal position and provides position and rate feedback for proper loop operation.

IMU FINE ALIGN LOOP

The fine align loop drives the IMU gimbals to the computer commanded angles ± 80" by pulse torquing the gyros. Pulse torquing is a computer controlled switching of a constant current source to a gyro torquer winding. The current produces gyro torque, a corresponding precession rate, and hence, gimbal position.

IMU INERTIAL MODE

The elements of the inertial mode are the gyro, stabilization amplifier, and gimbal torque motor. The gyro senses inertial rotation about its input axis and supplies torquing to the gimbal via the stabilization amplifier to compensate for the motion.

APOLLO INERTIAL INSTRUMENTATION/STABLE MEMBER ORIENTATION DIAGRAM

Gyro drift is positive when the SM drift rate is about the positive gyro input (IA) axis.

Drift Rate About SM Axes	Gyro Drift Coefficient		
	NBD	ADIA	ADSRA
W_{XSM}	+NBDX	+ADIAX (a_{XSM})	-ADSRAX (a_{YSM})
W_{YSM}	+NBDY	+ADIAY (a_{YSM})	-ADSRAY (a_{ZSM})
W_{ZSM}	-NBDZ	+ADIAZ (a_{ZSM})	+ADSRAZ (a_{YSM})

a_{XSM}, a_{YSM}, a_{ZSM} is positive along positive stable member axes.

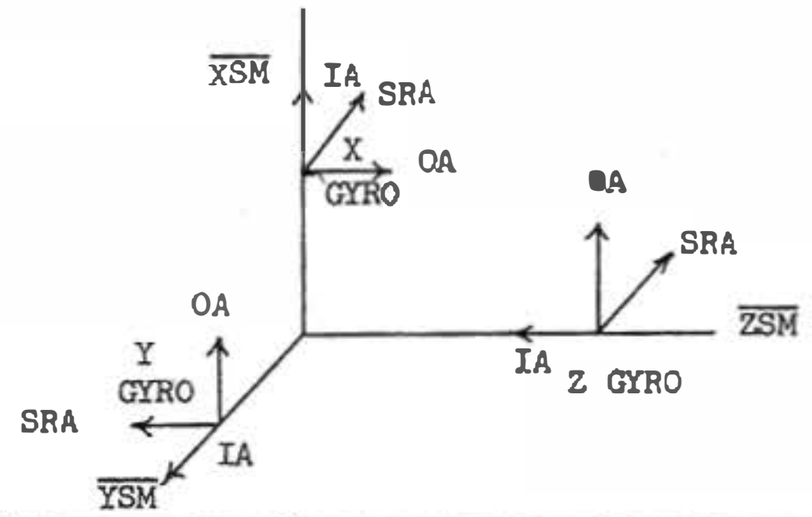

Gyro	IA Along	SRA Along	OA Along
X	+$\overline{XSM}$	-$\overline{YSM}$	+$\overline{ZSM}$
Y	+$\overline{YSM}$	-$\overline{ZSM}$	+$\overline{XSM}$
Z	-$\overline{ZSM}$	-$\overline{YSM}$	+$\overline{XSM}$

Input axes of the X, Y, Z accelerometers lie respectively along positive XSM, YSM, ZSM axes.

IMU COARSE ALI N LOOP

The servomechanism used to achieve coarse align of the Block II IMU is shown below.

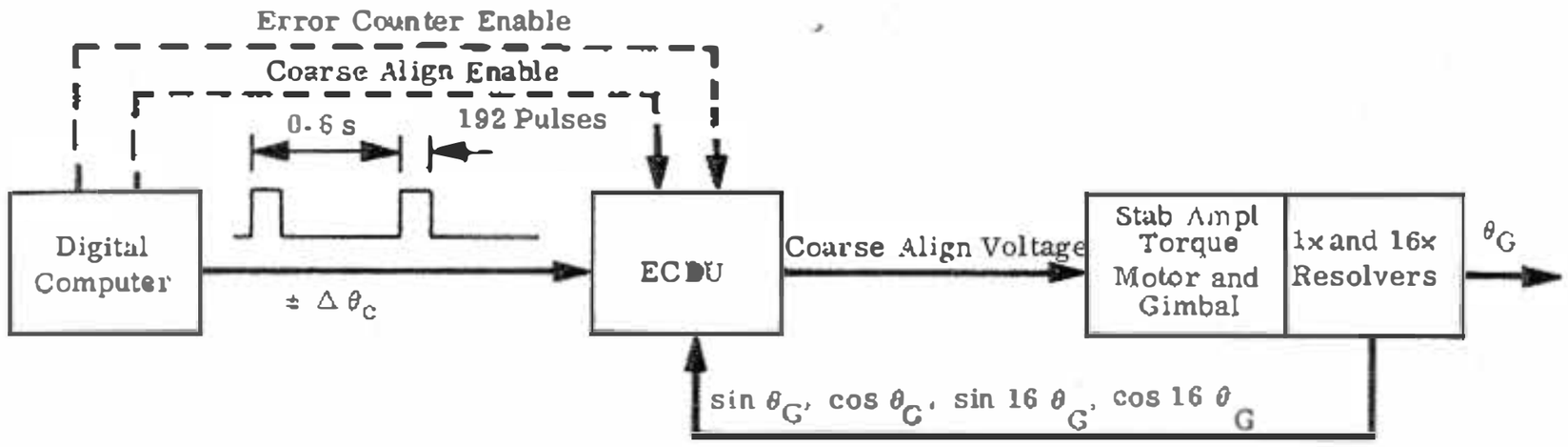

IMU Coarse Align Loop

Computer Operation

The following sequence of events is performed by the computer each time the Coarse Align program is entered.

1. Issue Coarse Align Enable. The computer sets Bit 4 of Channel 12 which issues the Coarse Align Enable discrete to the ECDU.
2. Issue Error Counter Enable. The computer sets Bit 6 of Channel 12 which issues the Error Counter Enable discrete to all three IMU axes of the ECDU.
3. Determine Command Angle. The contents of the computer gimbal angle counters are read and differenced with the desired gimbal angle to determine the command angle.
4. Issue Command Angle. Gimbal angle commands are issued in bursts of 192 pulses (8.4 degrees) at a rate of 3,200 pulses/second. Each burst requires 60 milliseconds. The delay between bursts is 540 milliseconds. If the command is not an integral multiple of 192 pulses, the remainder is issued as the last command. Gimbal commands are gated out of the computer by setting Bits 13, 14, and 15 of Channel 14. All three bits are set simultaneously, thereby allowing all three gimbals to be slewed simultaneously.
5. Determine If Command Angle Is Achieved. After gimbal commands have been issued, the computer reads gimbal position and compares the position achieved with the desired angle. If the difference is greater than 2.0 degrees, an alarm is issued.

Steps 1 through 5 constitute a computer control process which positions gimbals in an open loop sense. The computer does not check final gimbal position such that corrective commands can be issued if the desired position has not been reached. The check on final gimbal position is used to determine if an alarm condition exists.

ECDU Response to Coarse Align Enable

When addressed by the Coarse Align Enable discrete from the computer, the ECDU:

1. Provides a ground to the PSA coarse align input relays, thereby switching the stabilization amplifier inputs from IRIG outputs to the ECDU DAC output.
2. Supplies a ground for the PSA stabilization amplifier demodulator relay, thereby changing the reference excitation of the stabilization amplifier ring demodulators from 3,200 Hz to 800 Hz.
3. Provides grounds for the coarse align relay in each of the stabilization amplifiers, thereby changing stabilization amplifier servo compensation.
4. Generates an internal moding signal which enables gimbal feedback pulses ($\Delta 2^2$) to increment the error counter. This signal also changes the read counter high speed pulse rate (P_I pulses) from 12.8 kpps to 6.4 kpps.

ECDU Response to Error Counter Enable

When addressed by the Error Counter Enable discrete from the computer, the ECDU:

1. Generates an internal moding signal which allows error counter pulses ($P_E = \Delta 2^2$ or $\Delta \theta_C$) to increment the error counter. Absence of this discrete zeros the error counter and holds it there.
2. The Error Counter Enable command ($\bar{E}$) is combined with the Coarse Align discrete (C_A) and the CDU Zero command (CDUZ) to mode the read counter in accordance with the following logic equation.

$$Y = \bar{E} \cdot C_A + CDUZ$$

where

a. The presence of Y inhibits P_I pulses from incrementing the read counter

b. $\bar{E}$ = Error Counter Enable "not"

c. C_A = Coarse Align Enable

d. CDUZ = CDU Zero Discrete

e. $E \cdot C_A$ is an "and" operation

f. + is an "or" operation

Inhibiting the read counter in this fashion will prevent gimbal drift due to residual voltages within the loop. The fine error will accumulate to a value such that the effect of residual voltages is cancelled.

ECDU Servo Control

Servoing the IMU to the correct position as commanded by the computer is achieved by a multiple loop system consisting of the error counter, a DAC, the coarse align mixing amplifier, a system of rate and switch selection logic, the read counter, and the stabilization loop.

Error Counter

The error counter provides digital differencing between gimbal commands and gimbal positions. Input pulses to the error counter are either position command pulses ($\Delta\theta_C$) from the computer or gimbal position feedback pulses (ΔZ^2) from the read counter loop. Computer command pulses ($+\Delta\theta_C$) cause the error counter to count up. Read counter (ΔZ^2) pulses will, in turn, count the error counter down, thereby, producing negative feedback. The error counter is also mechanized to inhibit (PE) pulses when Bits 7 and 8 of the error counter are "1." The result is a limiting of the output at 11.25° + 5.625° or 16.875°. The total functional characteristic is shown below.

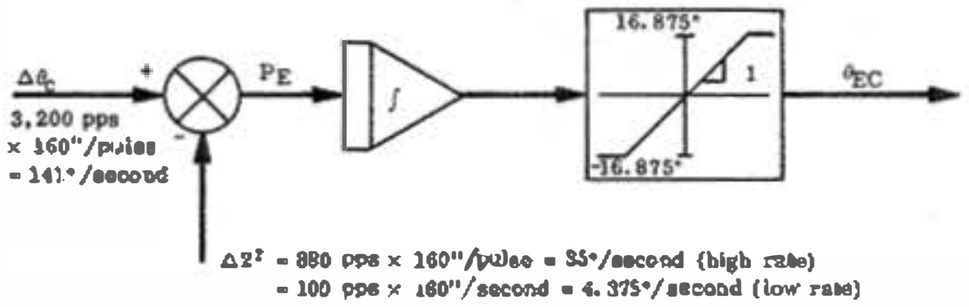

Error Counter

DAC (Digital to Analog Converter)

The DAC consists of logic switches driven by the error counter, a divide down resistive ladder network, and a scaling amplifier. The function of the DAC is to provide an 800 Hz signal whose amplitude is proportional to the angle content of the error counter. DAC sensitivity is adjusted to 0.3 Vrms/degree.

Coarse Align Mixing Amplifier

The coarse align mixing amplifier adds the fine error voltage and the DAC output with a mixing ratio of 3 to 1 in favor of the fine error input. DAC outputs to the coarse align mixing amplifier are diode-limited to 0.5 volt as shown below.

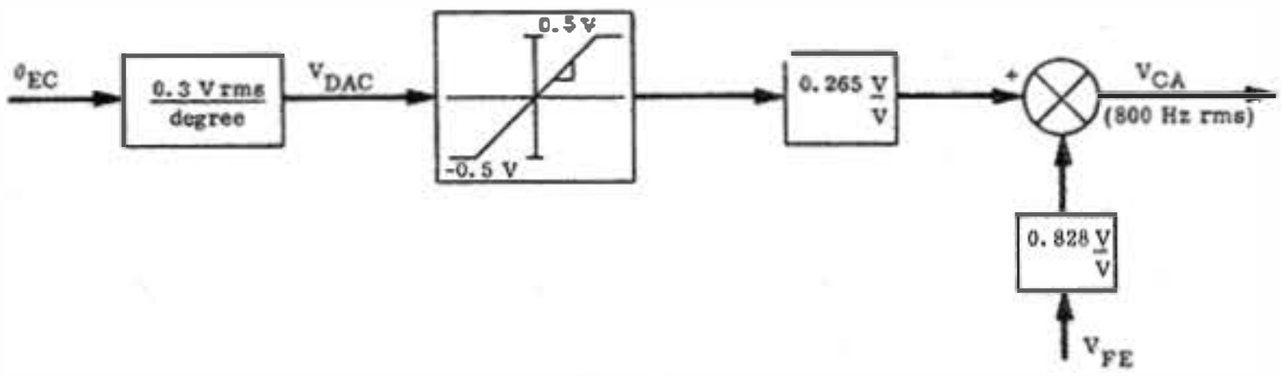

Coarse Align Mixing Amplifier

Fine System Switch Selection Logic

The fine system switch selection logic is a network of weighting resistors, summing amplifiers, and switches used to implement the trigonometric identity $-\sin(\theta - \psi) = -\sin\theta\cos\psi + \cos\theta\sin\psi$. Functionally, this network compares the gimbal angle (θ) as represented by the 16-speed resolver signals to the read counter angle (ψ) and generates an error signal used to drive the read counter loop.

Rate Select and Up/Down Logic

Rate select and up/down logic is generated from the fine error signal (an analog measure of the error between resolver angle and read counter angle) by Schmitt trigger type level detectors. The rate select and up/down logic processes the sampled output of the Schmitt triggers to determine at which rate the read counter should be incremented. If the output of the high speed Schmitt is high (1.7-volt trigger threshold), the read counter is incremented at 6,400 pps; if the output of the fine Schmitt is high (0.1-volt trigger threshold), the rate is 800 pps. Thus, in one sample time the read counter will be incremented 1 bit at low speed or 8 bits at high speed. The functional equivalent of System Rate and Switch Selection is shown below.

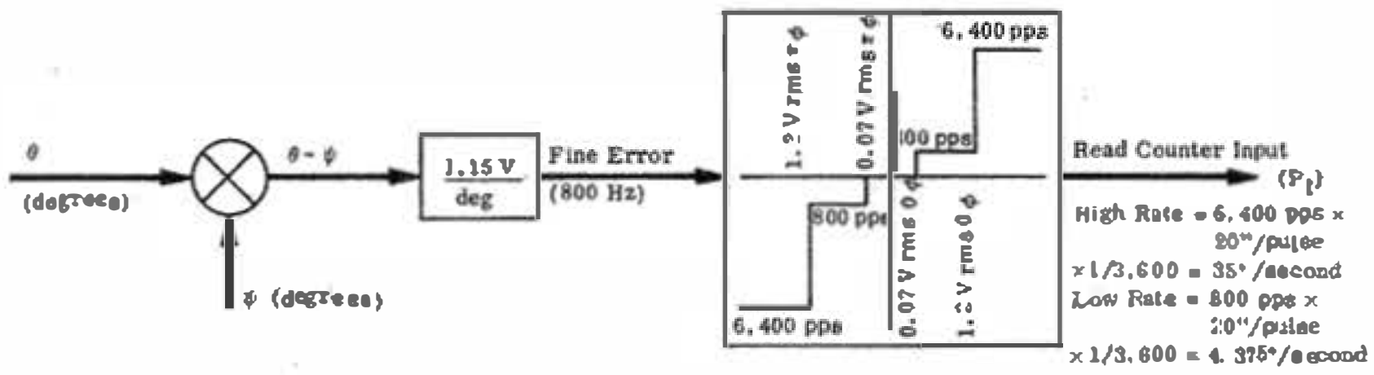

Read Counter

The read counter is a 16-stage digital counter with an IMU angle granularity of 20 seconds/bit. Inputs to the read counter are controlled by rate select and up/down logic. The output is used by the fine system switch selection logic to produce the fine error signal. Access by the computer is to the low order bit (ΔZ^5). Access by the error counter is to the third order bit (ΔZ^2). Functionally, the read counter is represented as an integrator with a count rate in degrees/second and an output in degrees.

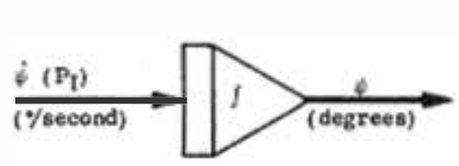

Stabilization Loop

The analog part of the coarse align servomechanism consists of the stabilization amplifier, torque motor, and gimbal. The overall transfer function of the above three elements is as shown below.

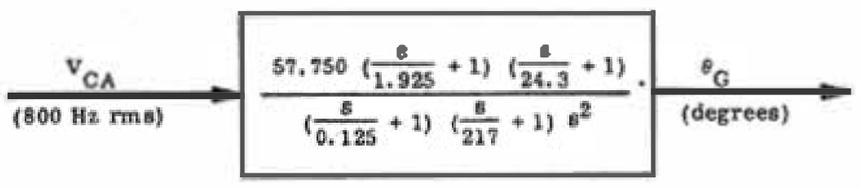

IMU COARSE ALIGN BLOCK DIAGRAM

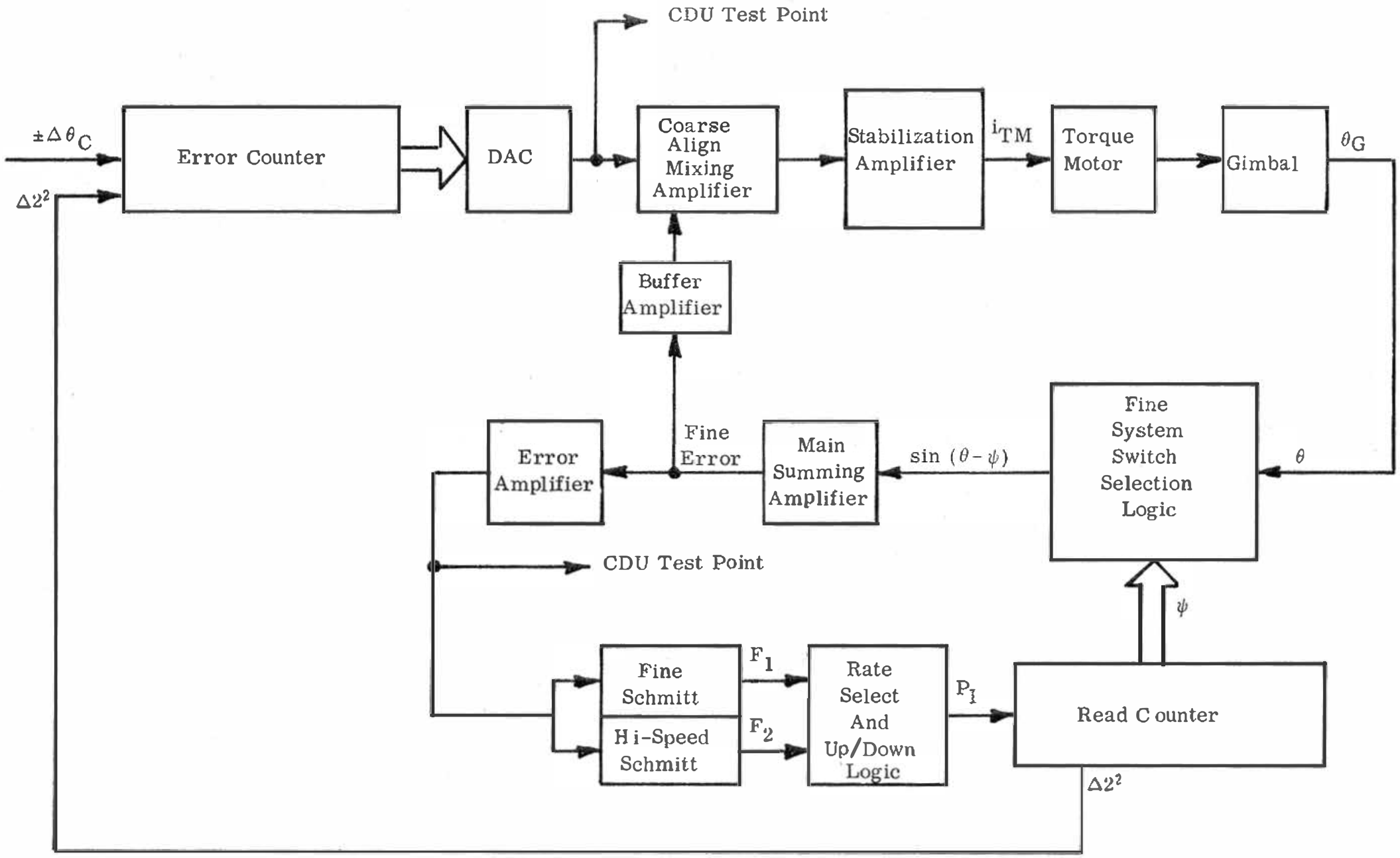

IMU COARSE ALIGN FUNCTIONAL BLOCK DIAGRAM

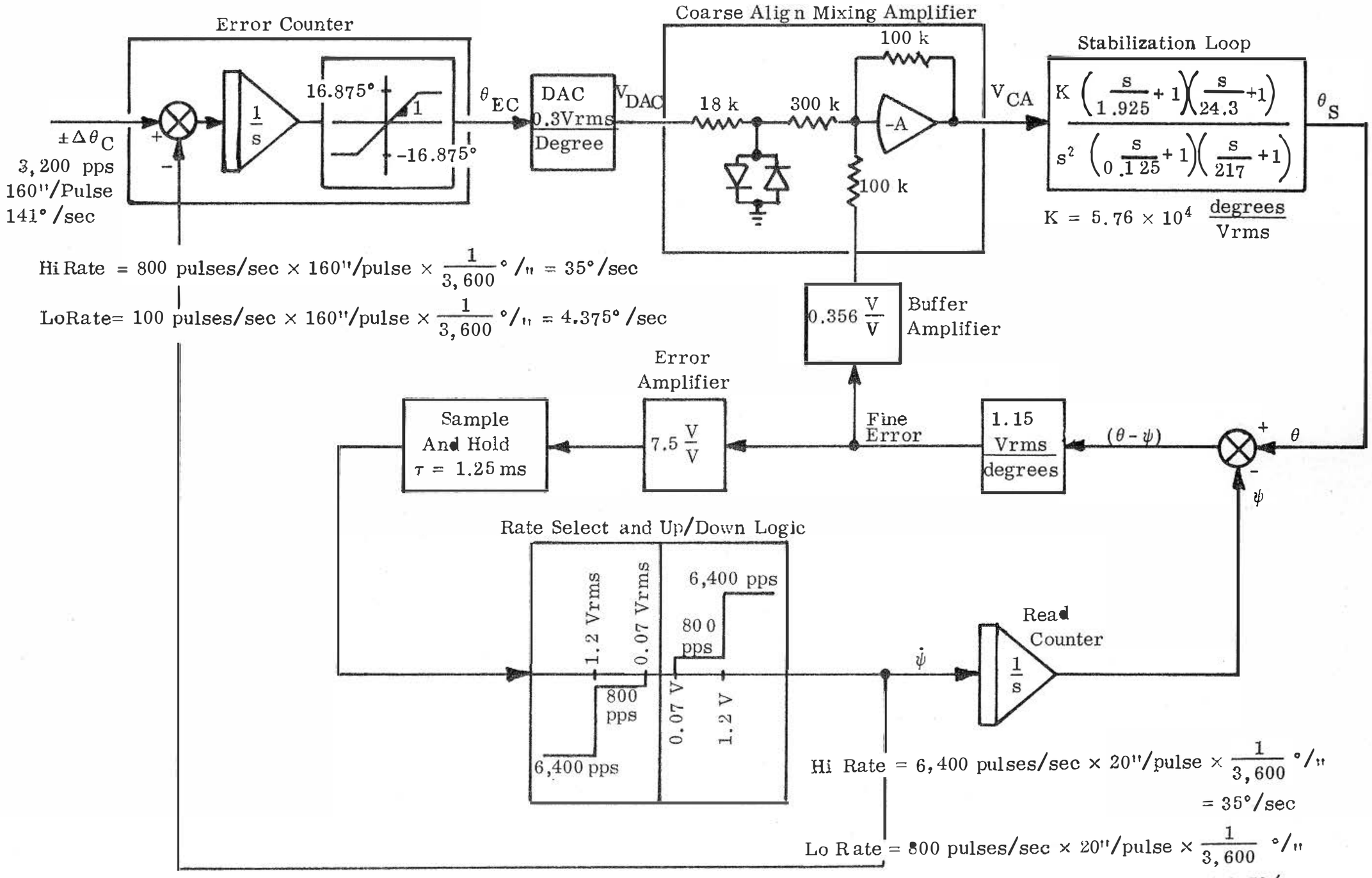

HW-14

ECDU COARSE ALIGN NETWORK

ECDU COARSE ALIGN NETWORK

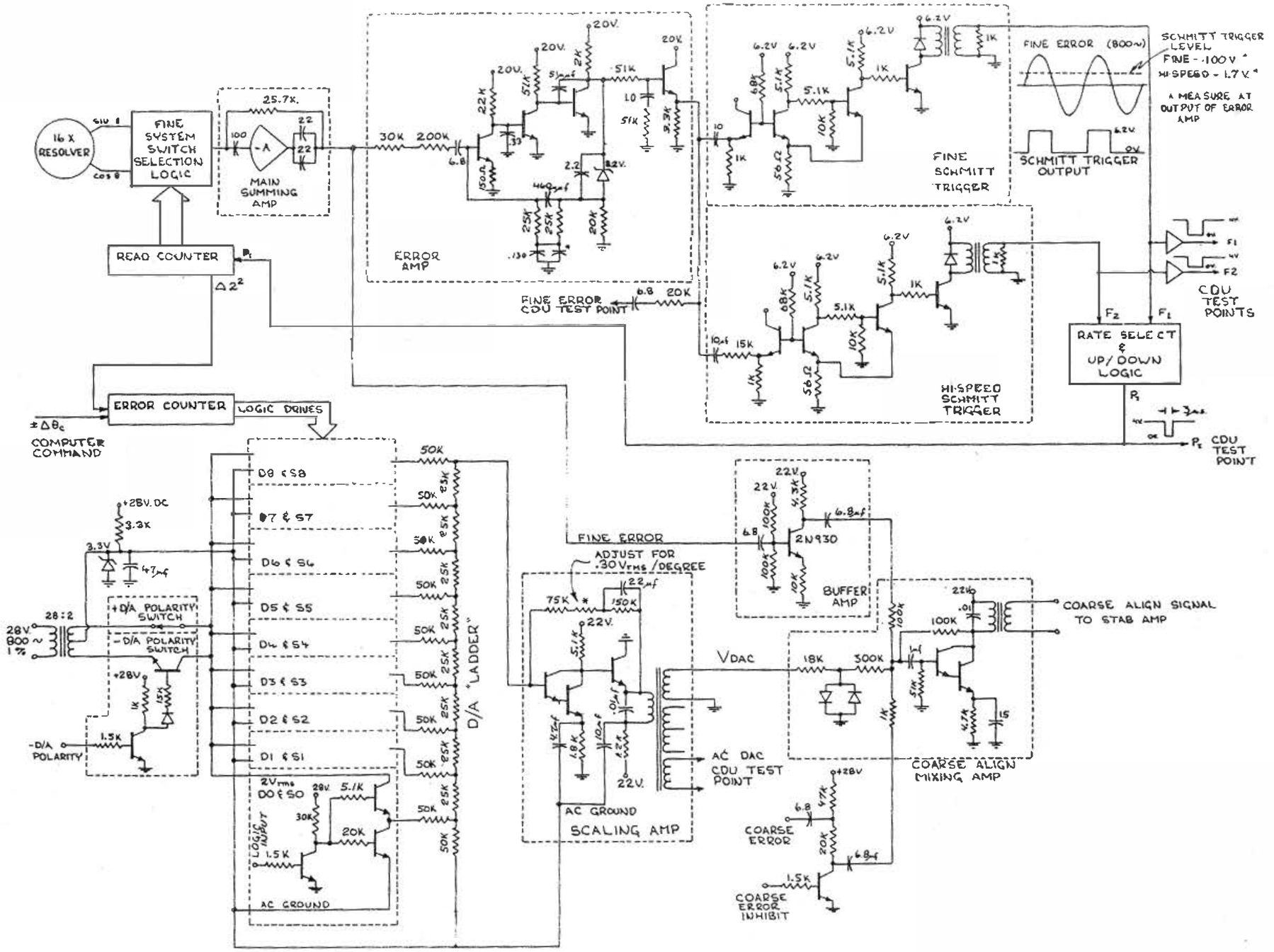

HW-15

IMU INERTIAL MODE

The circuitry employed by the Block II stabilization amplifier operates on IRIG error signals in the following sequence:

1. Input network
   a. Full wave phase sensitive ring demodulator
   b. AC ripple filter
2. High gain amplifier and torque motor current driver
3. Feedback network
   a. Armature current sampler
   b. R-C servo compensation network

Input Network

The input gain characteristic of the stabilization amplifier originates from the circuit shown below.

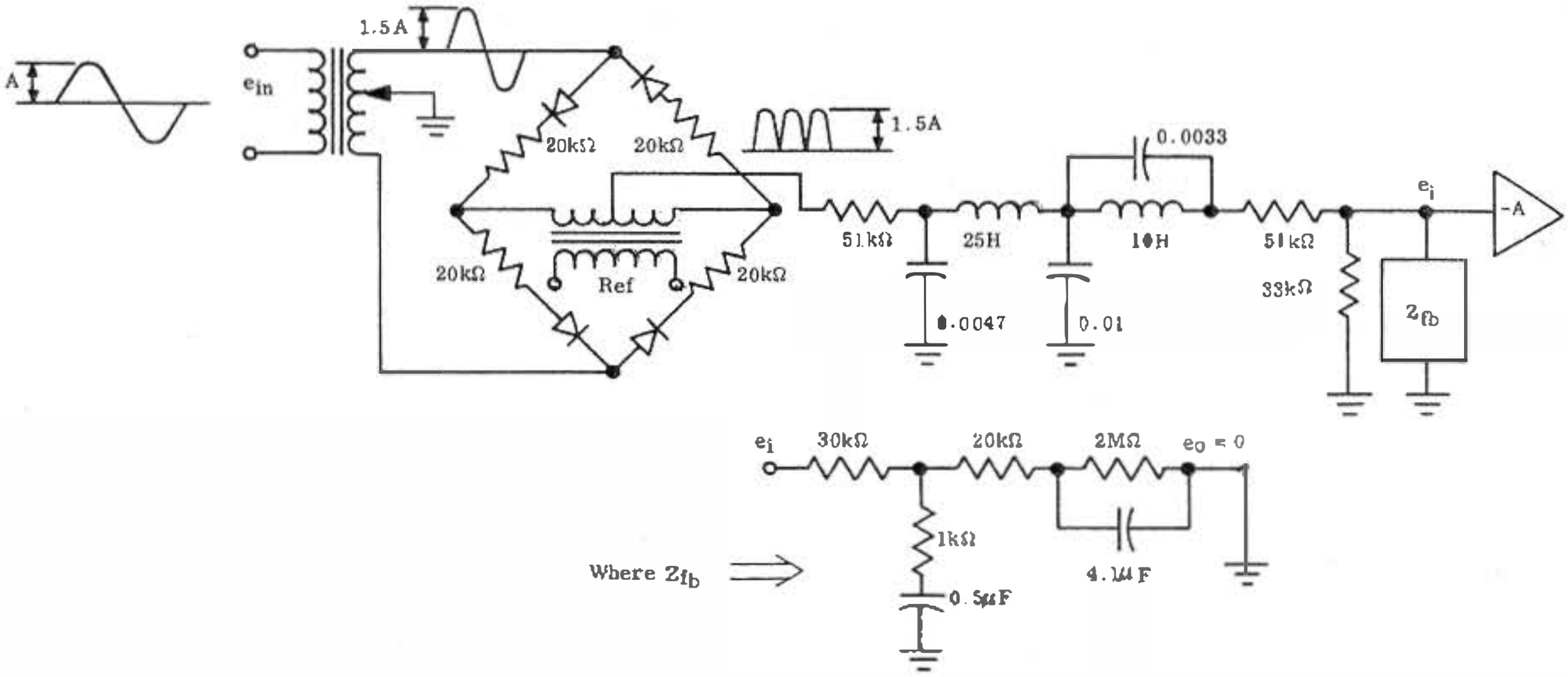

The gain factor relating demodulator output to IRIG input is:

$$\frac{V_{dc}}{V_{rms}} = 1.5 \text{ (XFMR scale factor)} \times 1.414 \left(\frac{\text{ac peak-to-peak}}{\text{ac V rms}}\right) \times \frac{2}{\pi}^{*}$$

$$\frac{V_{dc}}{V_{rms}} = 1.35 \text{ V/V}$$

* $\frac{2}{\pi}$ is the dc component of the Fourier series of a full wave rectified signal.

The total input gain relating IRIG error signals (3,200 Hz) to dc volts at the High Gain Amplifier input is

$$\frac{e_o}{e_{in}} = 1.35 \frac{V_{dc}}{V_{rms}} \times \frac{33\ k\Omega}{145\ k\Omega} = 0.307 \frac{V_{dc}}{V_{rms}}\text{(IRIG)}$$

Where 33 kΩ/145 kΩ is the effective "divide down" resistance of the input network.

Feedback Network

The feedback gain characteristic of the stabilization amplifier originates from armature current feedback of the gimbal drive motors. A 1-ohm resistor is inserted in series with the armature winding of each motor to detect armature current. The appropriate feedback gain unique to each gimbal loop is obtained with the divide-down networks shown below

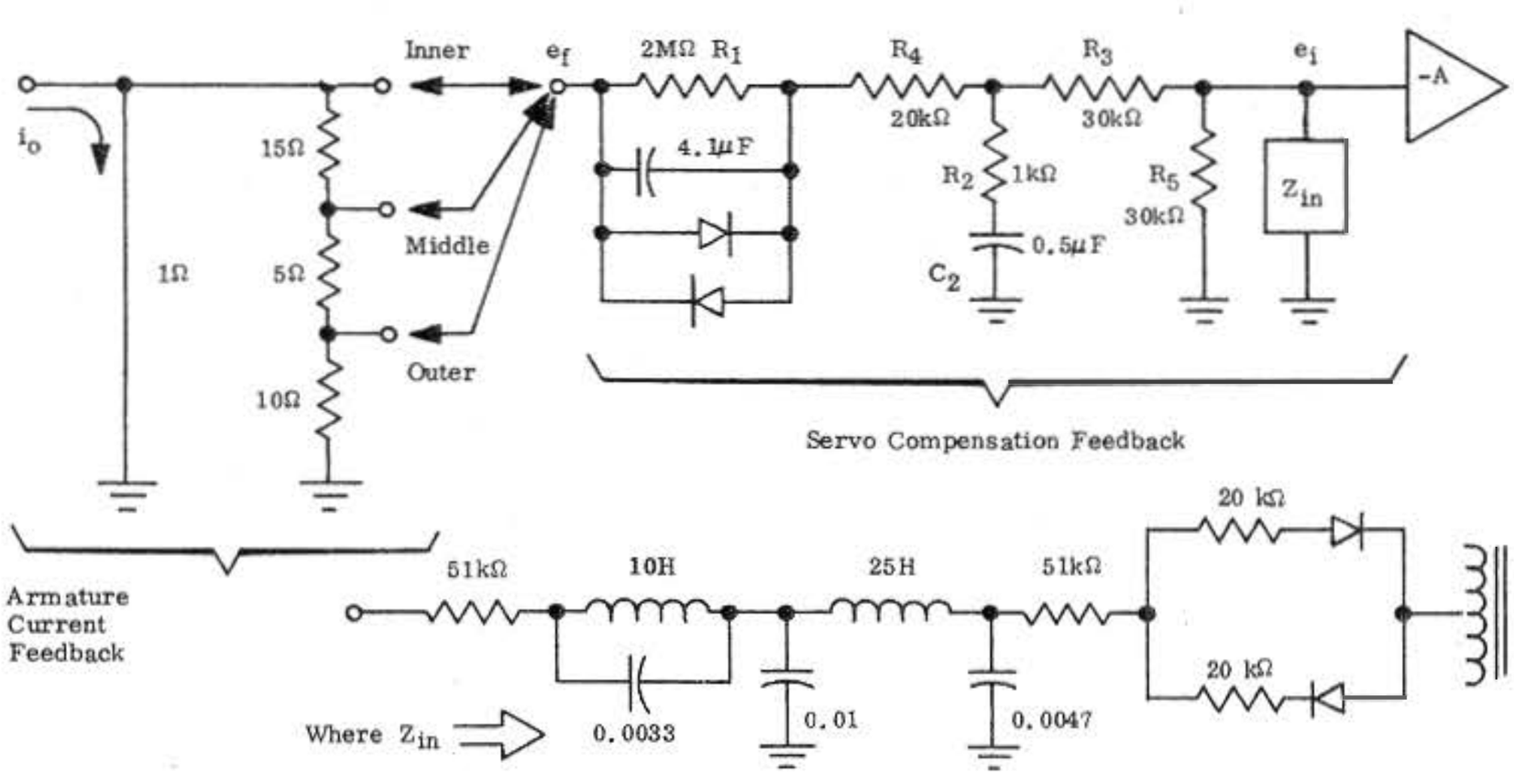

where

$$e_{fb}\ \text{(Inner loop)} = (i_{TM})\ \left(\frac{1 \times 30}{1 + 30}\right) = \frac{30}{31}\ i_{TM}$$

$$e_{fb}\ \text{(middle loop)} = (i_{TM})\ \left(\frac{15}{30}\right)\left(\frac{30}{31}\right) = \frac{15}{31}\ i_{TM}$$

$$e_{fb}\ \text{(outer loop)} = (i_{TM})\ \left(\frac{10}{30}\right)\left(\frac{30}{31}\right) = \frac{10}{31}\ i_{TM}$$

Frequency shaping of torque motor current is achieved with the passive "T" network shown above. The frequency response characteristic of the feedback compensation network is:

$$\frac{e_o}{e_{fb}} = 0.020\ \frac{\left(\frac{s}{0.125} + 1\right)\left(\frac{s}{2,000} + 1\right)}{\left(\frac{s}{4.12} + 1\right)\left(\frac{s}{102.5} + 1\right)}\ \text{volts/volt}$$

with the feedback diodes not conducting.

$$\frac{e_o}{i_{TM}} = \left(\frac{30}{31}\ \text{or}\ \frac{15}{31}\ \text{or}\ \frac{10}{31}\right)\ 0.020\ \frac{\left(\frac{s}{0.125} + 1\right)\left(\frac{s}{2,000} + 1\right)}{\left(\frac{s}{4.12} + 1\right)\left(\frac{s}{102.5} + 1\right)}$$

Assuming an ideal High Gain Amplifier, the input and feedback networks can be combined as if each were working into an operational amplifier thus:

$$\frac{i_{TM}}{V_{rms\ (IRIG)}} = \frac{\text{Input Network}}{\text{Feedback Network}} = \frac{0.307}{0.020}\ \frac{\left(\frac{s}{4.12} + 1\right)\left(\frac{s}{102.5} + 1\right)}{\left(\frac{s}{0.125} + 1\right)\left(\frac{s}{2,000} + 1\right)}$$

$$\frac{i_{TM\ (Adc)}}{V_{IRIG}\ (Vrms\ ac)} = \frac{15\ \left(\frac{s}{4.12} + 1\right)\left(\frac{s}{102.5} + 1\right)}{\left(\frac{s}{0.125} + 1\right)\left(\frac{s}{2,000} + 1\right)}\ \text{A/V (inner axis)}$$

Course Align

When used for coarse align, the stabilization amplifier is reconfigured as follows:

1. The input and reference signals are switched from 3,200 Hz to 800 Hz.
2. The feedback compensation is changed by connecting a 4.1 μF capacitor in parallel with the 0.5 μF capacitor used for the inertial mode.
3. The coarse align compensation is:

$$\frac{i_{TM}\ (Adc)}{V_{DAC}\ (Vrms\ ac)} = 15\ \frac{\left(\frac{s}{1.925} + 1\right)\left(\frac{s}{24.3} + 1\right)}{\left(\frac{s}{0.125} + 1\right)\left(\frac{s}{217} + 1\right)}\ \text{inner loop}$$

IMU STABILIZATION AMPLIFIER

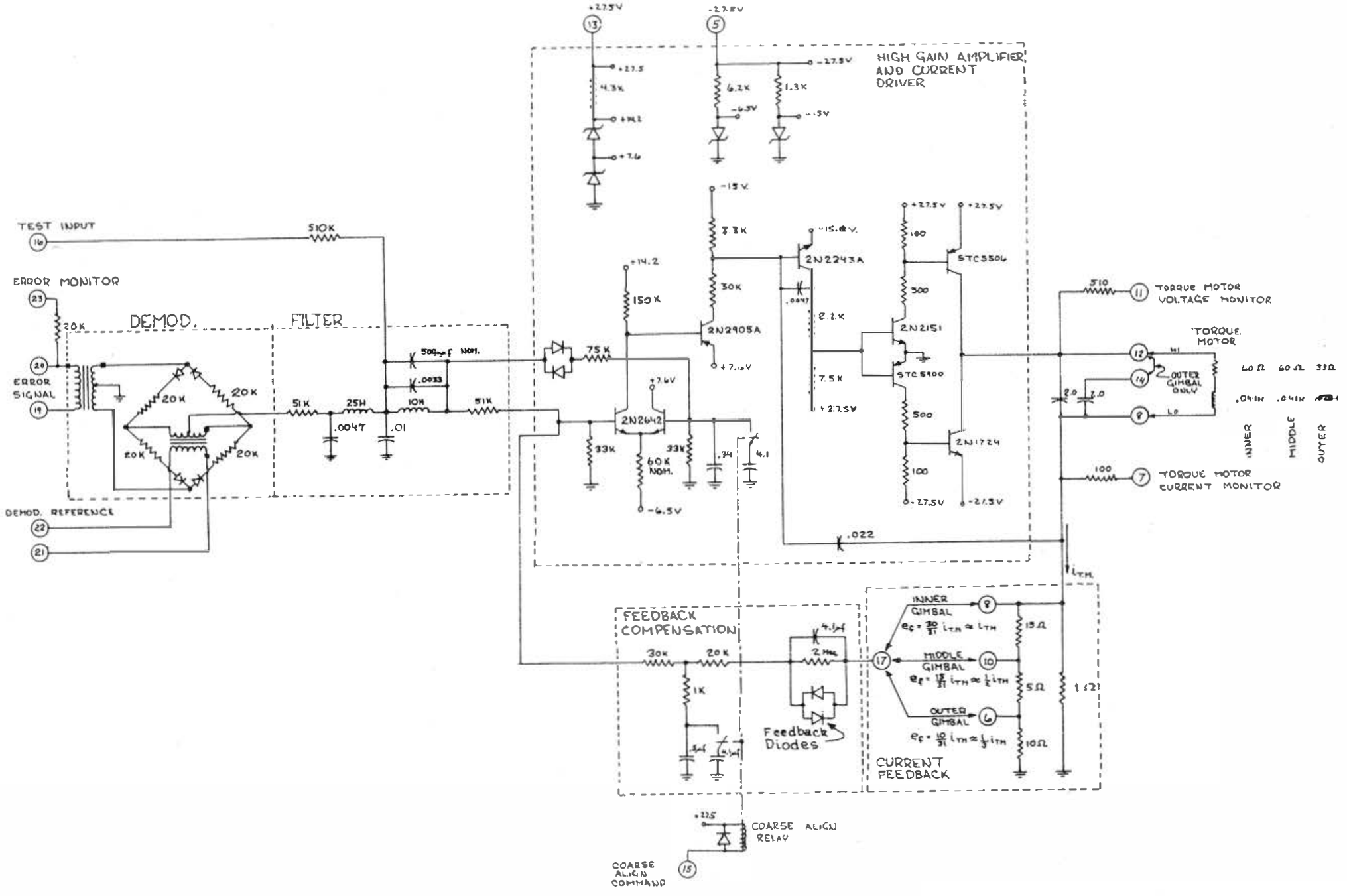

IMU "INERTIAL MODE" BLOCK DIAGRAM

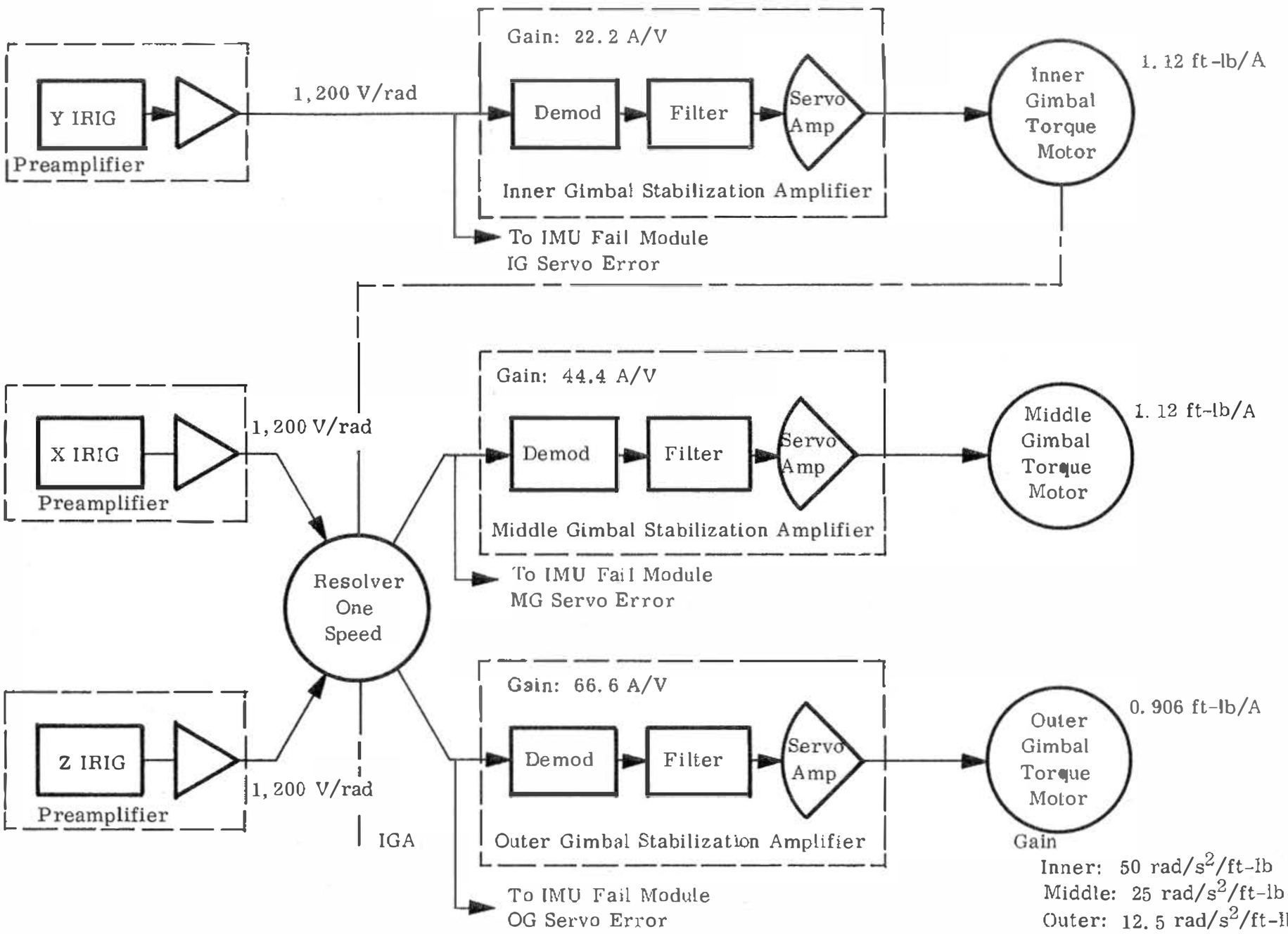

IMU "INERTIAL MODE" FUNCTIONAL BLOCK DIAGRAM

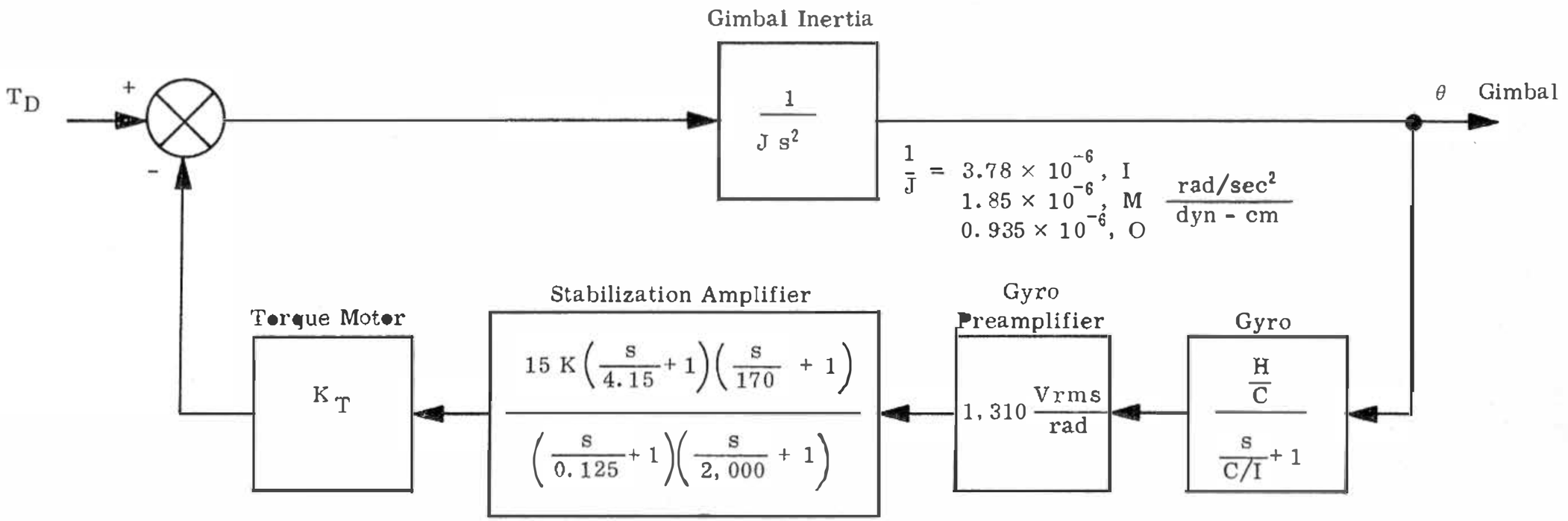

HW-20

$K_T = 1.52 \times 10^7 \frac{dyn - cm}{A}$, I
$1.52 \times 10^7 \frac{dyn - cm}{A}$, M
$1.23 \times 10^7 \frac{dyn - cm}{A}$, O

$K = 1 \frac{A}{V\,rms}$, I
$2 \frac{A}{V\,rms}$, M
$3 \frac{A}{V\,rms}$, O

$H = 0.434 \times 10^6 \frac{dyn - cm}{rad/sec}$

$C = 0.475 \times 10^6 \frac{dyn - cm}{rad/sec}$

$I = 367\ gm - cm^2$

$H/C = 0.915$

$C/I = 1,290\ rad/sec$

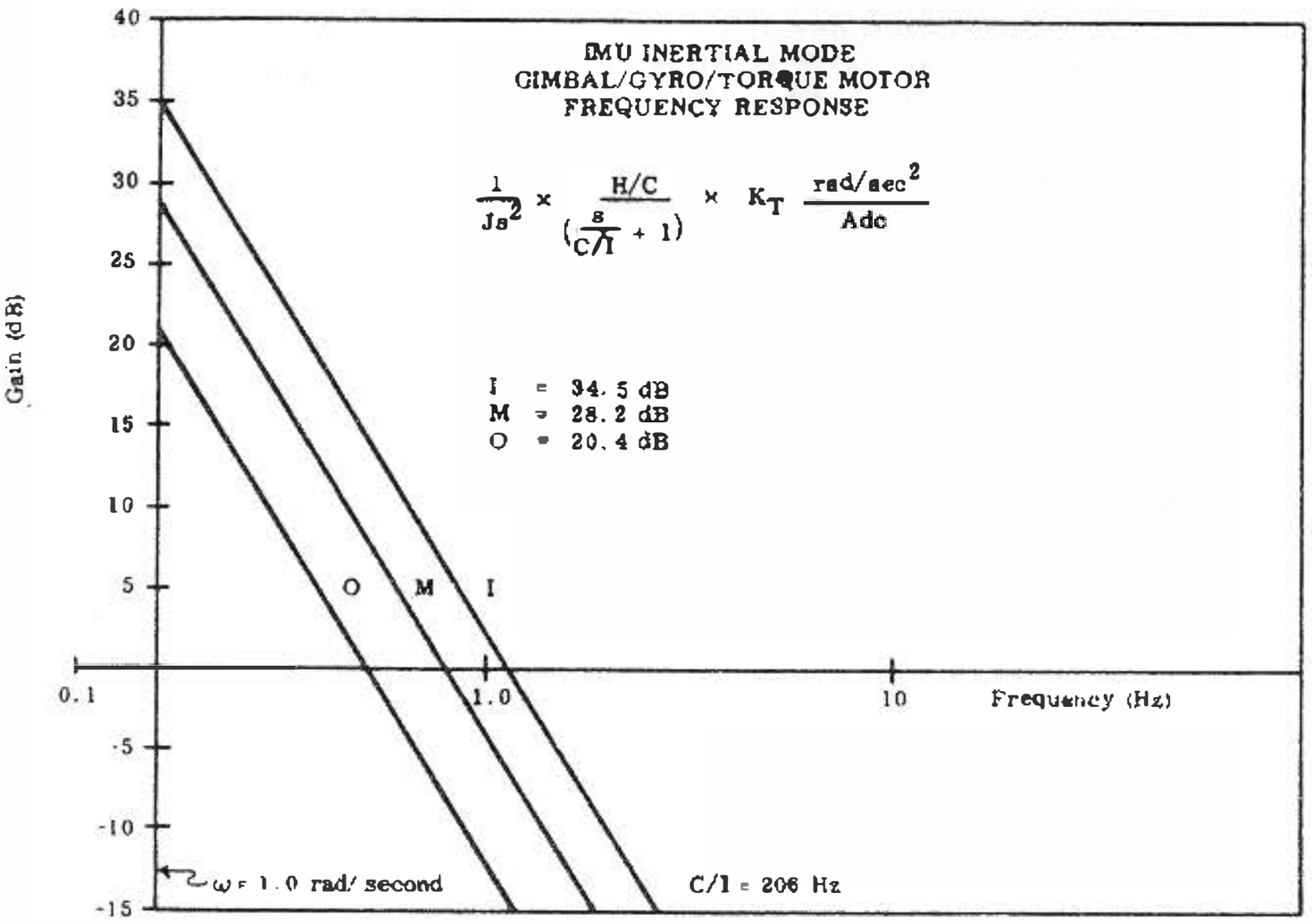
IMU INERTIAL MODE
GIMBAL/GYRO/TORQUE MOTOR
FREQUENCY RESPONSE
$\frac{1}{Js^2} \times \frac{H/C}{(\frac{s}{C/I} + 1)} \times K_T \frac{rad/sec^2}{Adc}$
I = 34.5 dB
M = 28.2 dB
O = 20.4 dB
Gain (dB)
40
35
30
25
20
15
10
5
-5
-10
-15
O
M
I
0.1
1.0
10
Frequency (Hz)
ω = 1.0 rad/ second
C/I = 206 Hz

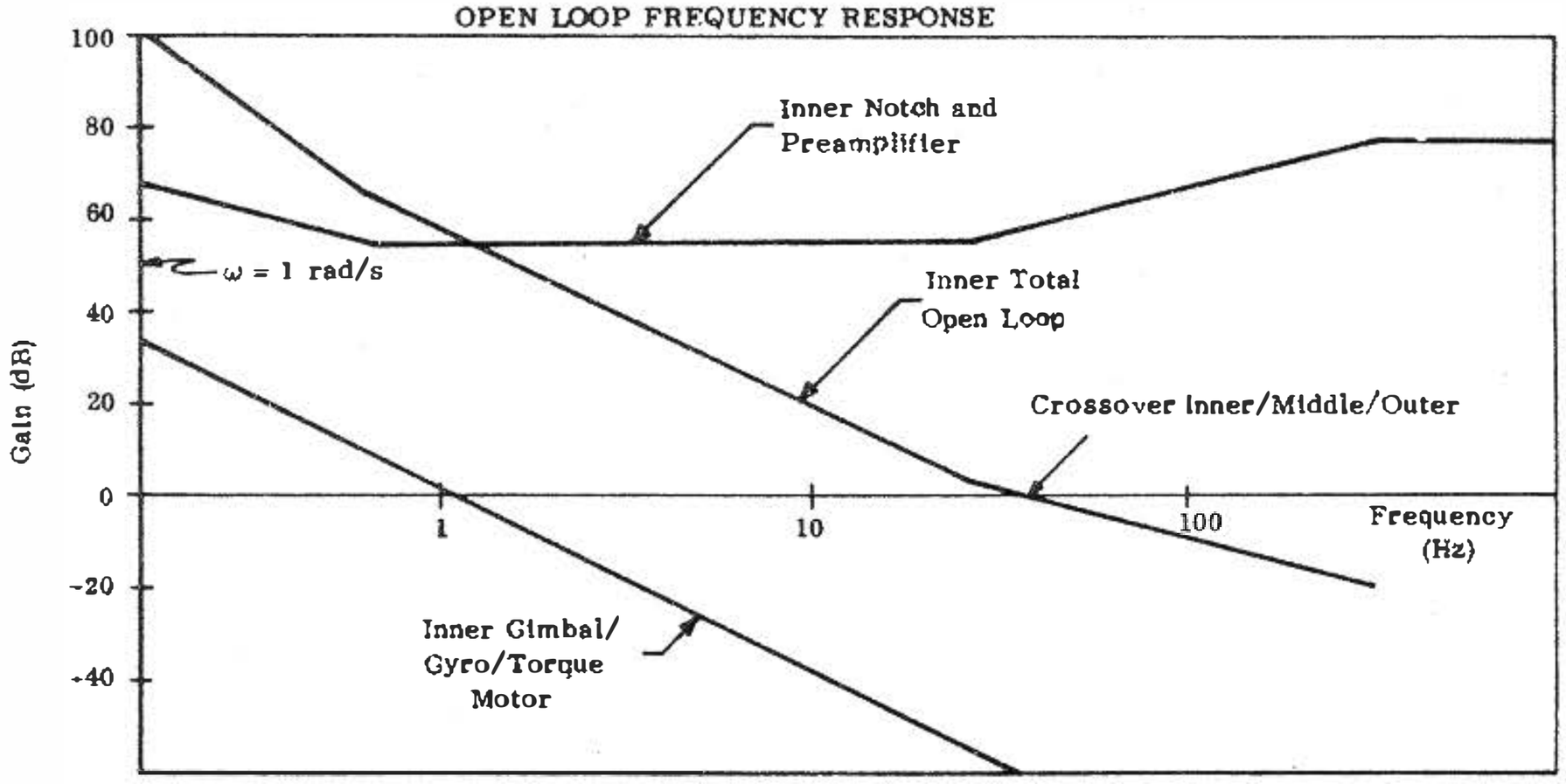
IMU INERTIAL MODE
OPEN LOOP FREQUENCY RESPONSE
Gain (dB)
100
80
60
40
20
0
-20
-40
Inner Notch and
Preamplifier
ω = 1 rad/s
Inner Total
Open Loop
Crossover Inner/Middle/Outer
Inner Gimbal/
Gyro/Torque
Motor
1
10
100
Frequency
(Hz)

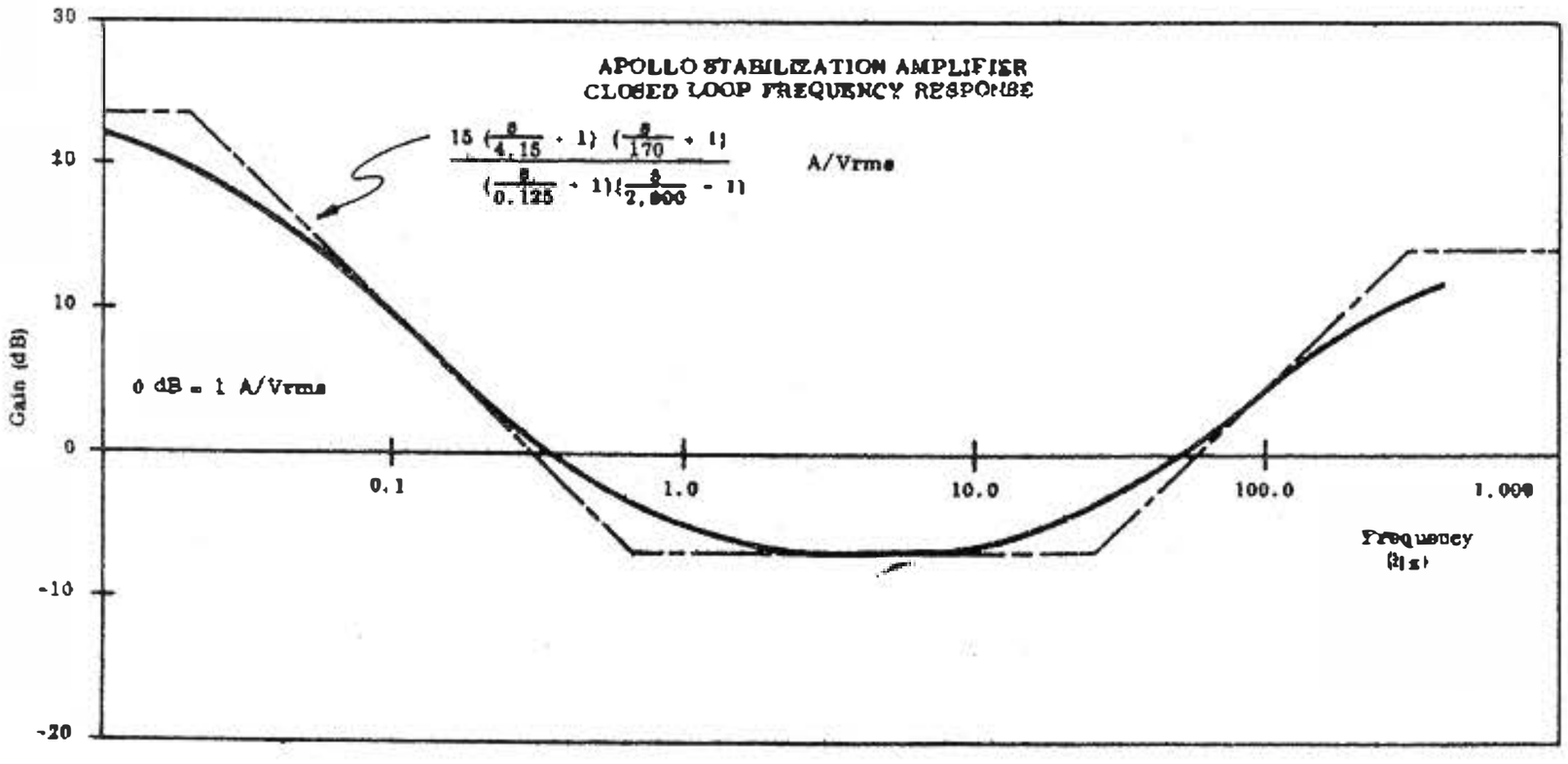
APOLLO STABILIZATION AMPLIFIER
CLOSED LOOP FREQUENCY RESPONSE
$\frac{15(\frac{s}{4.15} + 1)(\frac{s}{170} + 1)}{(\frac{s}{0.125} + 1)(\frac{s}{2,000} - 1)}$ A/Vrms
0 dB = 1 A/Vrms
Gain (dB)
30
20
10
0
-10
-20
0.1
1.0
10.0
100.0
1,000
Frequency
(Hz)

GYRO PULSE TORQUING

Gyro torque, its corresponding precession rate, and hence gimbal position are controlled by regulating the pulse width of gyro torquer current. In the Fine Align mode, the length of the torquer current pulse is precisely controlled by the computer to achieve a desired gimbal position.

To torque a particular gyro, the following sequence of commands is issued by the computer:

1. Gyro Torque Enable
2. Gyro Select
3. Gyro Set (the Gyro Reset command is issued at all times when Gyro Set is off)

Gyro Torque Enable Command

The Gyro Torque Enable command is issued by the computer through Bit 6 of Channel 14. The Bit 6 gates a 102.4 kHz pulse train out of the computer to a relay driver in the Gyro Calibration Module. When actuated, 28 Vdc is applied to the Precision Voltage Reference (PVR) supply and 120 Vdc is applied to the Binary Current Switch and DC Differential Amplifier. The Gyro Torque Enable command must be issued 20 milliseconds prior to the Gyro Select Com and to assure ample time for relay closure.

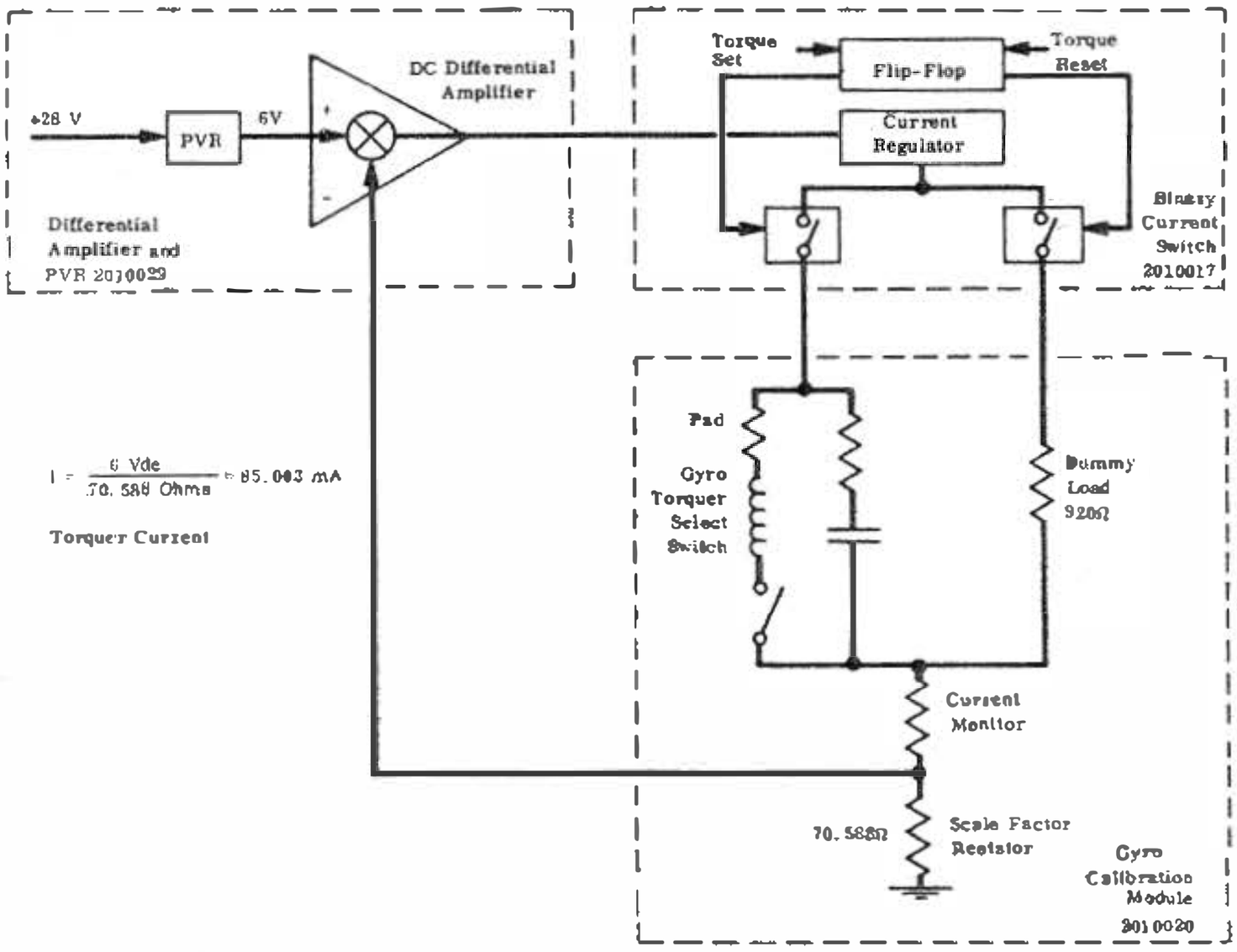

Gyro Select Command

The Gyro Select command is controlled by the computer through Bits 7, 8, and 9 of Channel 14. The selection logic is shown in the following table:

BIT 7	BIT 8	BIT 9	TORQUER WINDING
0	1	0	+Y
0	1	1	-Y
1	0	0	+X
1	0	1	-X
1	1	0	+Z
1	1	1	-Z

The mode logic shown above gates a 102.4 kHz pulse train out of the computer to one of six transistor switches in the Gyro Calibration Module. This pulse train will close the transistor switch, thereby enabling torquer current when the Gyro Set command is issued. If more than one gyro is to be torqued, the order of selection is Y, Z, and X with each gyro being completely torqued before the next one is selected.

Gyro Set Command

The Gyro Set command is controlled by the computer through Bit 10 of Channel 14. This bit sets a flip-flop which gates a 3.2 kHz pulse train out of the computer to the Binary Current Switch via the Gyro Calibration Module. When actuated in this manner, gyro torque current is switched from the 920-ohm dummy load to the torque winding selected by the computer. When the desired number of set pulses has been issued, the flip-flop is reset causing current to be transferred from the torquer winding to the dummy load.

If the number of set pulses to be issued is less than 16,384, they are all issued in a single burst at a rate of 3,200 pps. If the number is greater than 16,384, they are divided into groups of 8,192 pulses plus a remainder. Gimbal positioning is then achieved by issuing successive bursts of 8,192 pulses, each separated by a 30-millisecond delay, plus the remainder.

Pulse Torque Scale Factor

The pulse torque scale factor, in arc-seconds of gimbal travel per computer set pulse, is 0.617981441.750 ppm at the G & N level of test. The torque produced by each gyro torquer is:

$$T = KI = 4.335 \text{ dyne-cm}$$

where

K is microsyn sensitivity in dyne-cm/amp

i is microsyn current

Each torquer is padded to provide 4.335 dyne-cm of torque for a current of 85.003 mA.

Torquer current is precisely set and regulated by the PVR and the scale factor resistor in the Gyro Calibration Module.

The gyro pulse torque loop operates to achieve gimbal positioning under computer control by controlling the gyro precession rate and, hence, gimbal rate. The maximum slew rate capability of this system is:

$$\dot{\theta} = \frac{T}{H} = \frac{4335 \text{ dyne-cm}}{0.434 \times 10^6 \frac{\text{dyne-cm}}{\text{rad/s}}} = 10 \text{ mrad/s}$$

where

T = microsyn torque

H = gyro angular momentum

GYRO PULSE TORQUING LOOP

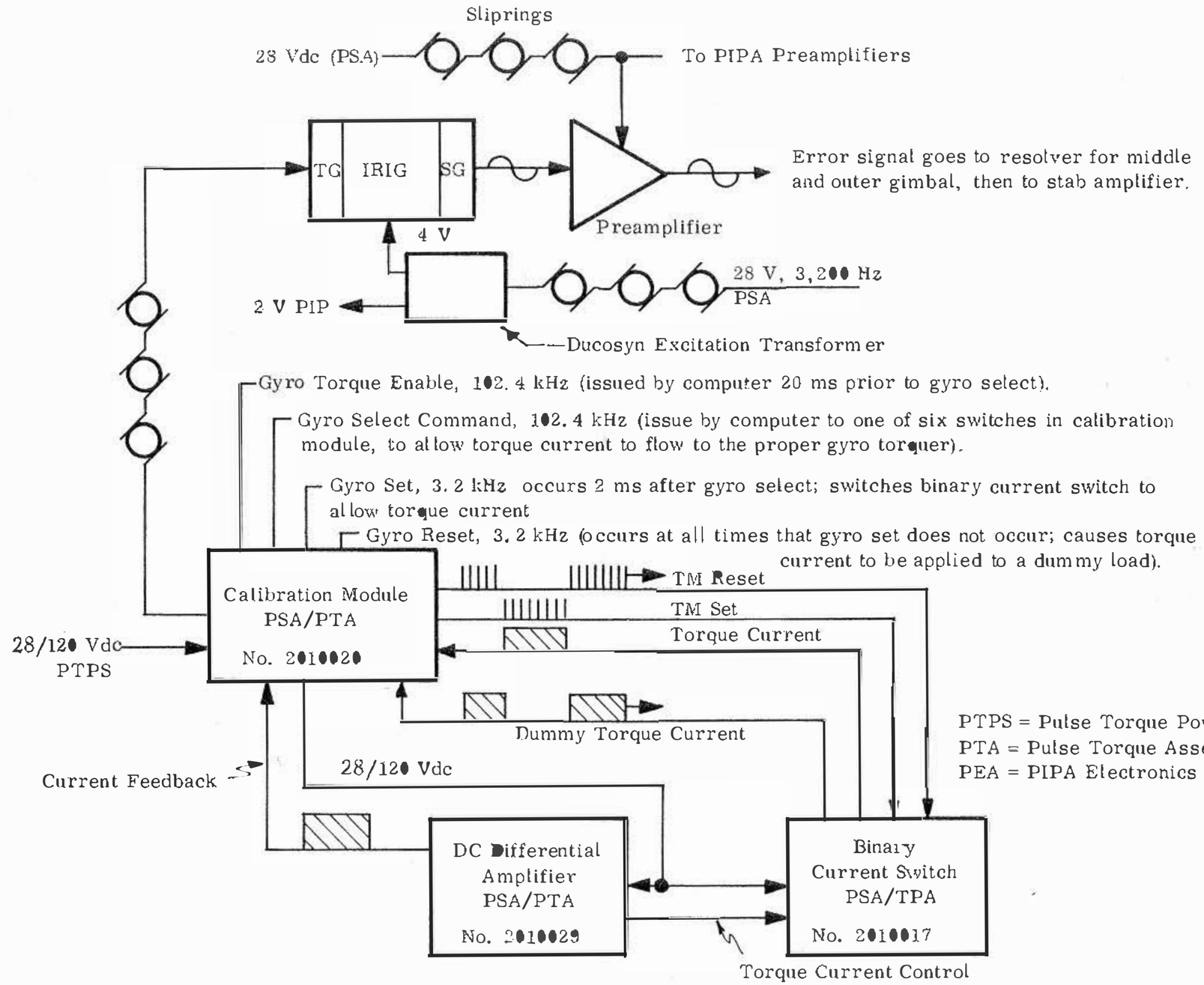

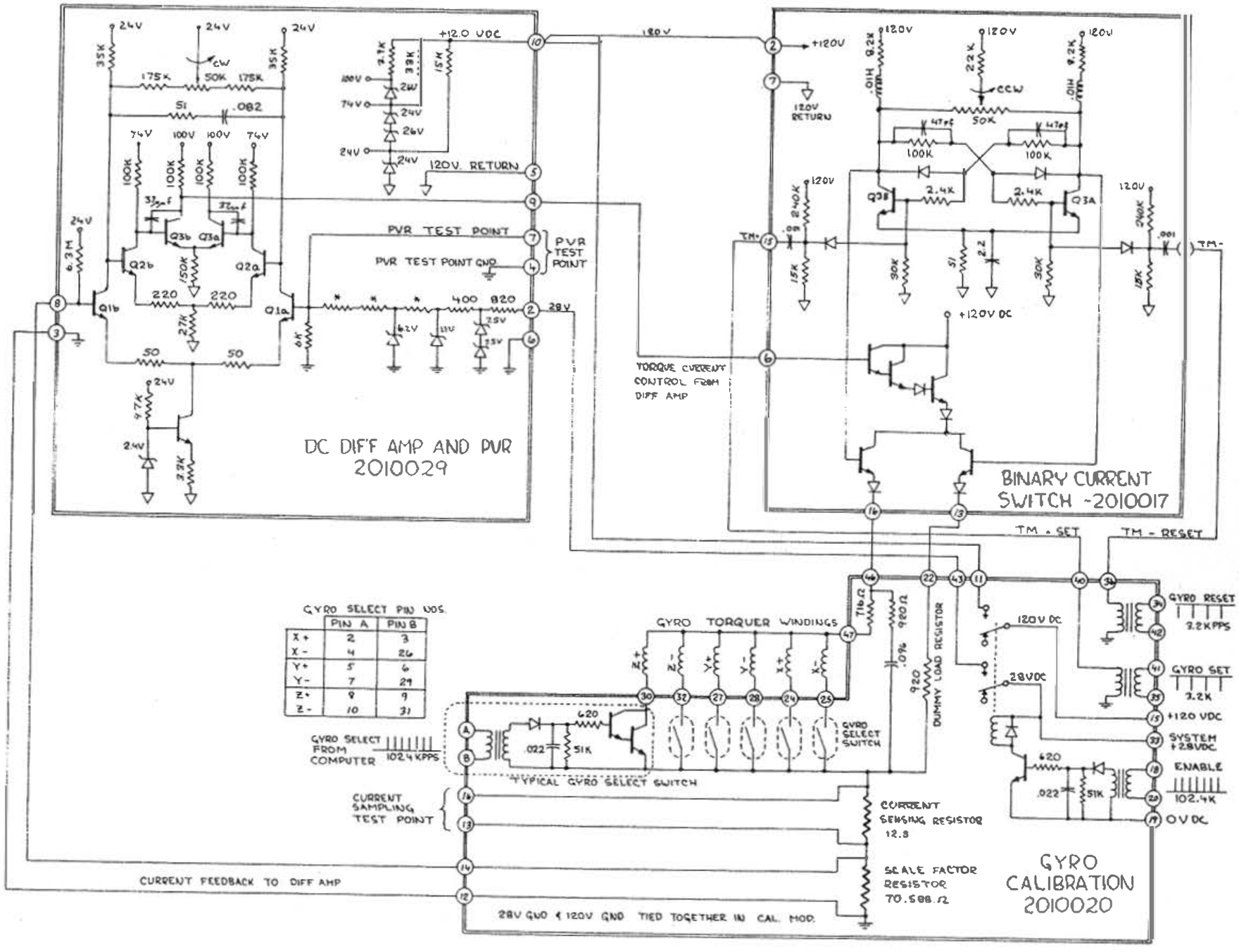

GYRO PULSE TORQUING LOOP

IMU FINE ALIGN FUNCTIONAL BLOCK DIAGRAM

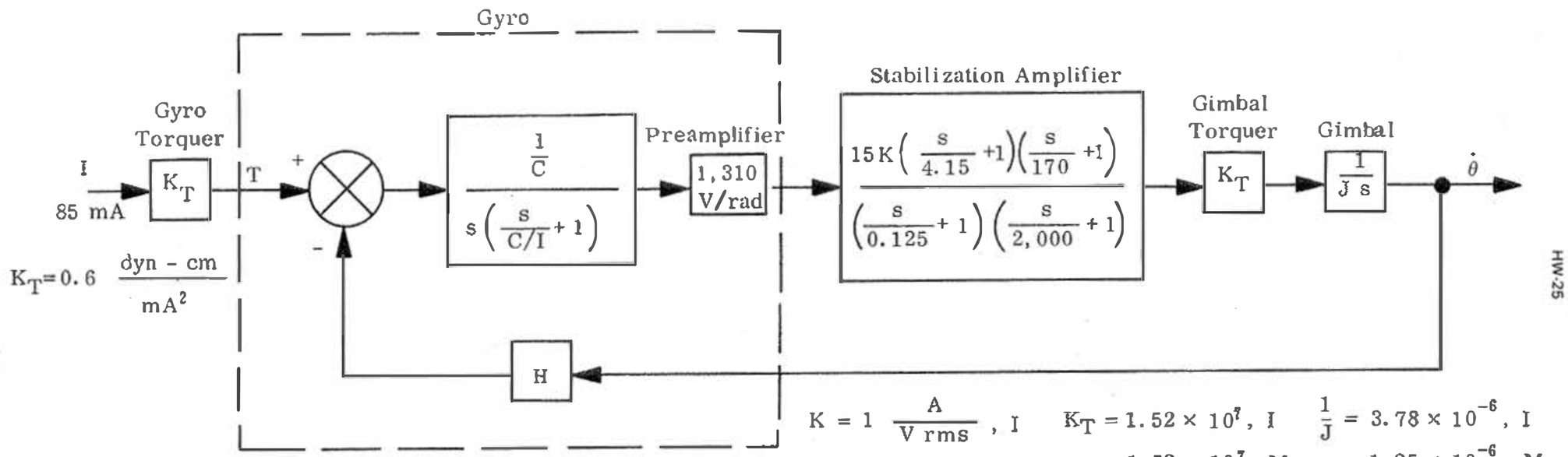

$K_T = 0.6 \quad \frac{\text{dyn - cm}}{\text{mA}^2}$

$H = 0.434 \times 10^6 \quad \frac{\text{dyn - cm}}{\text{rad/sec}}$

$C = 0.475 \times 10^6 \quad \frac{\text{dyn - cm}}{\text{rad/sec}}$

$I = 367 \text{ gm - cm}^2$

$K = 1 \quad \frac{A}{V \text{ rms}}$, I

$K = 2$, M

$K = 3$, O

$K_T = 1.52 \times 10^7$, I
$= 1.52 \times 10^7$, M
$= 1.23 \times 10^7$, O
$\frac{\text{dyn - cm}}{A}$

$\frac{1}{J} = 3.78 \times 10^{-6}$, I
$= 1.85 \times 10^{-6}$, M
$= 0.935 \times 10^{-6}$, O
$\frac{\text{rad/sec}^2}{\text{dyn - cm}}$

Gyro Torque $= K_T I^2 = 0.6(85)^2 = 4,335$ dyn - cm

APOLLO II IRIG

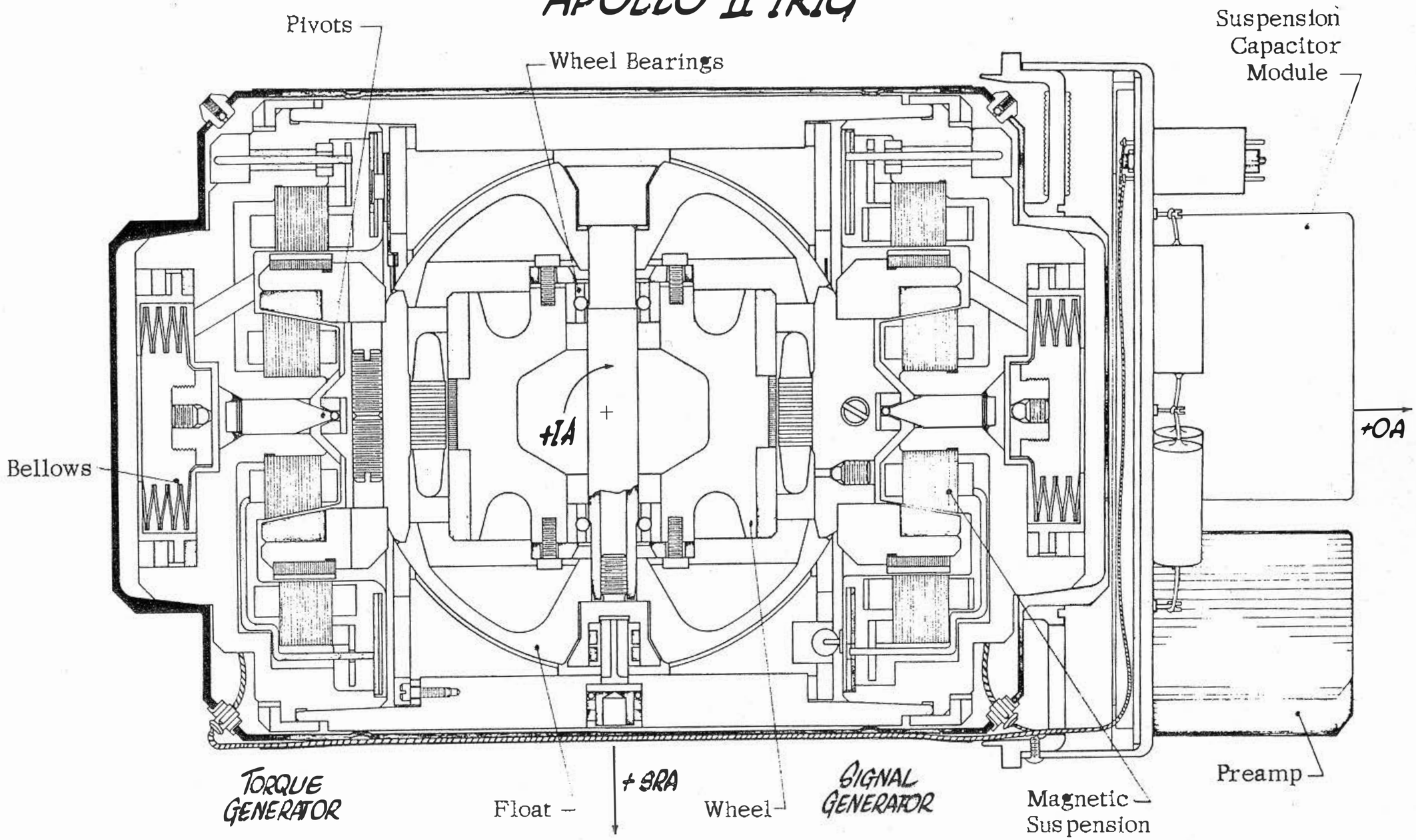

HW-26

APOLLO 25 IRIG

Moments of Inertia:

about OA:	367.3 gram-cm^2
about IA:	650.8 gram-cm^2
about SRA:	724.9 gram-cm^2

Damping Coefficients:

about OA:	4.75 x 10^5 dyne-cm/rad/sec
about IA:	1.5 x 10^9 dyne-cm/rad/sec
about SRA:	1.5 x 10^9 dyne-cm/rad/sec

Wheel Excitation: 28 volts, 800 cps, 4.5 watts at synchronism

Wheel Speed: 24,000 rpm

Angular Momentum at 24,000 rpm: 434 x 10^3 gram-cm^2 sec

Signal Generator:

Input:	4 volts, 3200 cps
Sensitivity:	10 mv/mrad

Torque Generator Sensitivity: 0.6 dyne-cm/ma^2

Pulse Torque Scale Factor: $\pi/2^{20}$ rad/pulse at 3200 pps

Magnetic Suspension:

Input:	4 volts, 3200 cps
Stiffness:	6 gm/0.0001 inches Radial
	0.8 gm/0.0001 inches Axial

Typical Temperature Sensitivity

Scale Factor:	400 ppm/$^\circ$ F
Drift:	0.2 meru/$^\circ$ F

Actual IRIG temperature

GYRO PARAMETERS

Primary gyro parameters are ADIA, ADSRA, NBD and scale factor. pecification values across ISS, G&N, and S/C testing are as shown in Table II-1.

Table II-1

Gyro Coefficient Stability Criteria					
Coefficient	Units	D1	D2	D3	Max
Acceleration Drift along the IA (ADIA)	meru/g	17	33	40	100
Acceleration Drift along the SRA (ADSRA)	meru/g	14	21	25	40
Non-Acceleration Bias Drift (NBD)	meru	6	9	11	15

Gyro scale factor limits are ± 1750 ppm.

The maximum value of gyro performance parameters which can be compensated for by the computer is shown in Table II-2.

Table II-2

Coefficient	Units	Max Value CM/IM
ADIA	meru/g	862 /630
ADSRA	meru/g	862/630
NBD	meru	128.7

IMU GYRO COMPENSATION

The compensated PIPA data is used to compute the IRIG torquing necessary to cancel the NBD, ADIA and ADSRA gyro coefficients. The computations are

$$XIRIG = -ADIAX\ PIPAX_C + ADSRAX\ PIPAY_C - NBDX\ \Delta t$$

$$YIRIG = -ADIAY\ PIPAY_C + ADSRAY\ PIPAZ_C - NBDY\ \Delta t$$

$$ZIRIG = -ADIAZ\ PIPAZ_C - ADSRAZ\ PIPAY_C + NBDZ\ \Delta t$$

where

XIRIG, YIRIG, ZIRIG are gyro drift compensations

NBDX, NBDY, NBDZ are gyro bias drifts (an erasable load)

ADSRAX, ADSRAY, ADSRAZ are gyro drifts due to acceleration in spin reference axis (an erasable load)

ADIAX, ADIAY, ADIAZ are gyro drifts due to acceleration in the input axis (an erasable load)

When the magnitude of any IRIG command exceeds two pulses, the commands are sent to the gyros.

During free-fall only the NBDX, NBDY, NBDZ are the relevant coefficients and the routine is so ordered that only these terms are calculated for the gyro compensation.

The computer NBD registers are 1460, 1461, and 1462 for the X, Y, and Z gyros respectively.

GYRO DRIFT NBD = (.007835) (Reg Contents in Decimal) MERU

HISTORY OF IN-FLIGHT GYRO DRIFT ERRORS

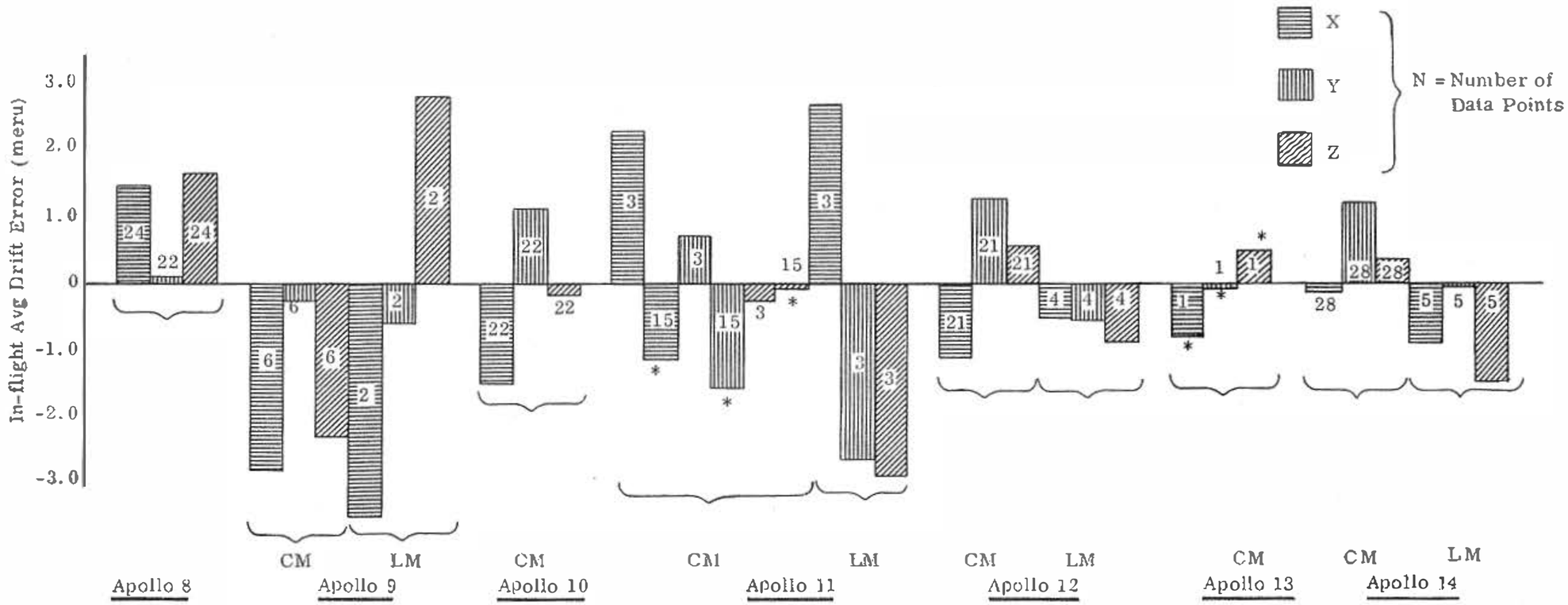

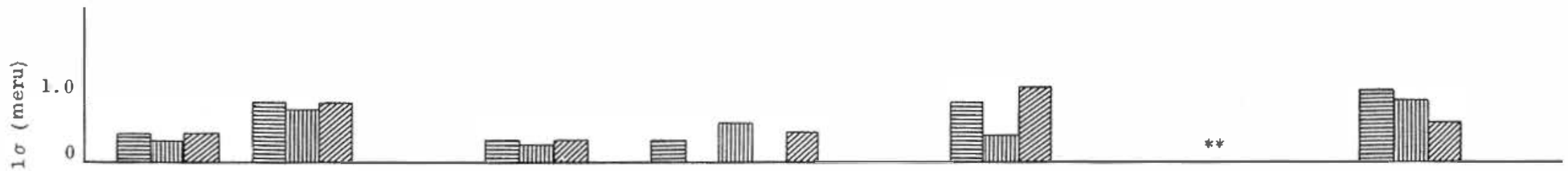

*After in-flight compensation change

** Insufficient number of data points

ELECTRONICS COUPLING DISPLAY UNIT (ECDU)

The ECDU encodes and scales the IMU gimbal angles and transfers the angles to the computer in the proper format.

The ECDU is an analog-to-digital converter which utilizes two encoding loops and one read counter which can be accessed by the computer.

One encoding loop is used with the 16 × gimbal resolver (the fine system); the other encoding loop is used with the 1 × gimbal resolver (the coarse system).

The ECDU digital servo is analogous to a resolver synchro illustrated by the following diagram.

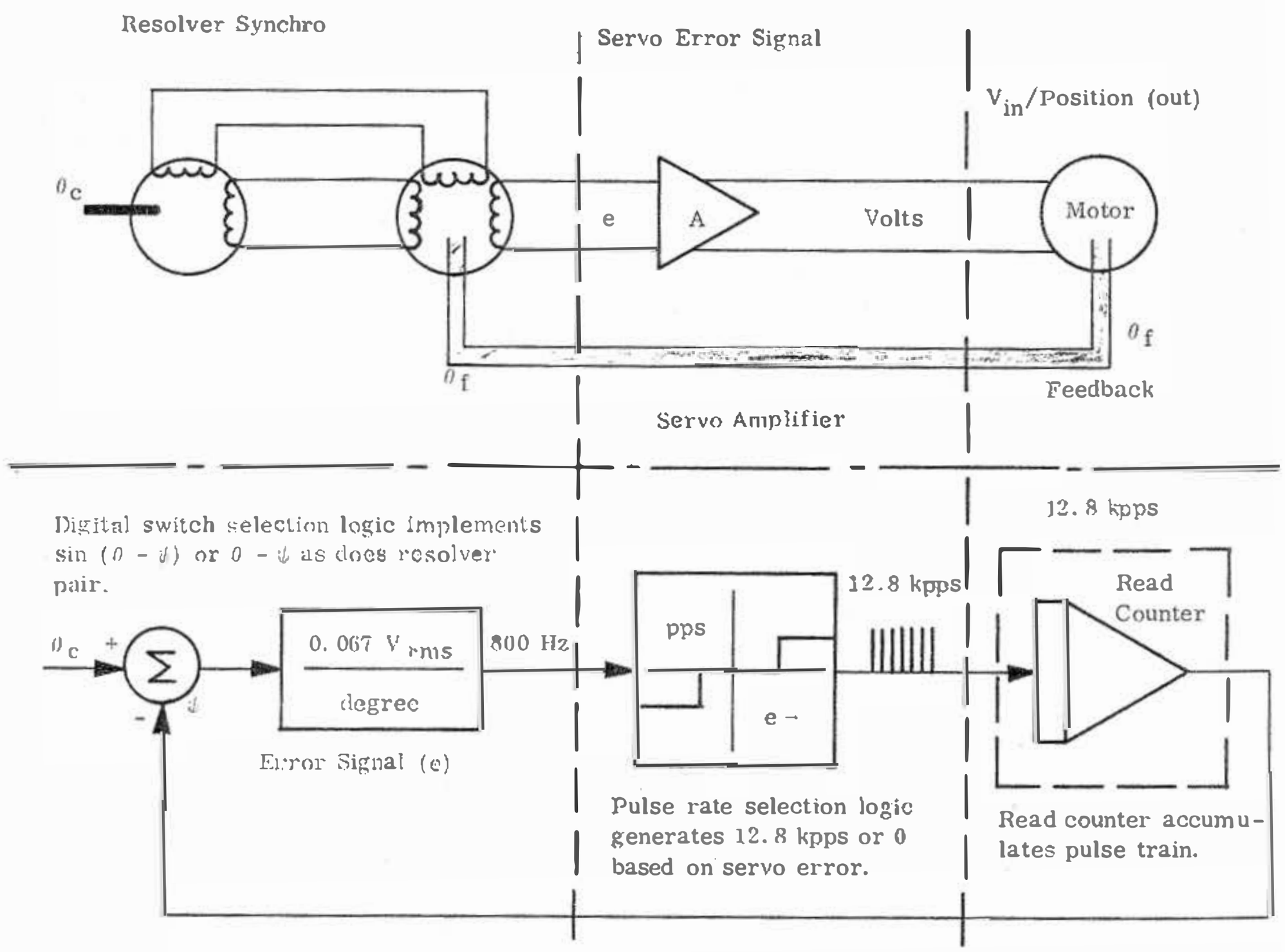

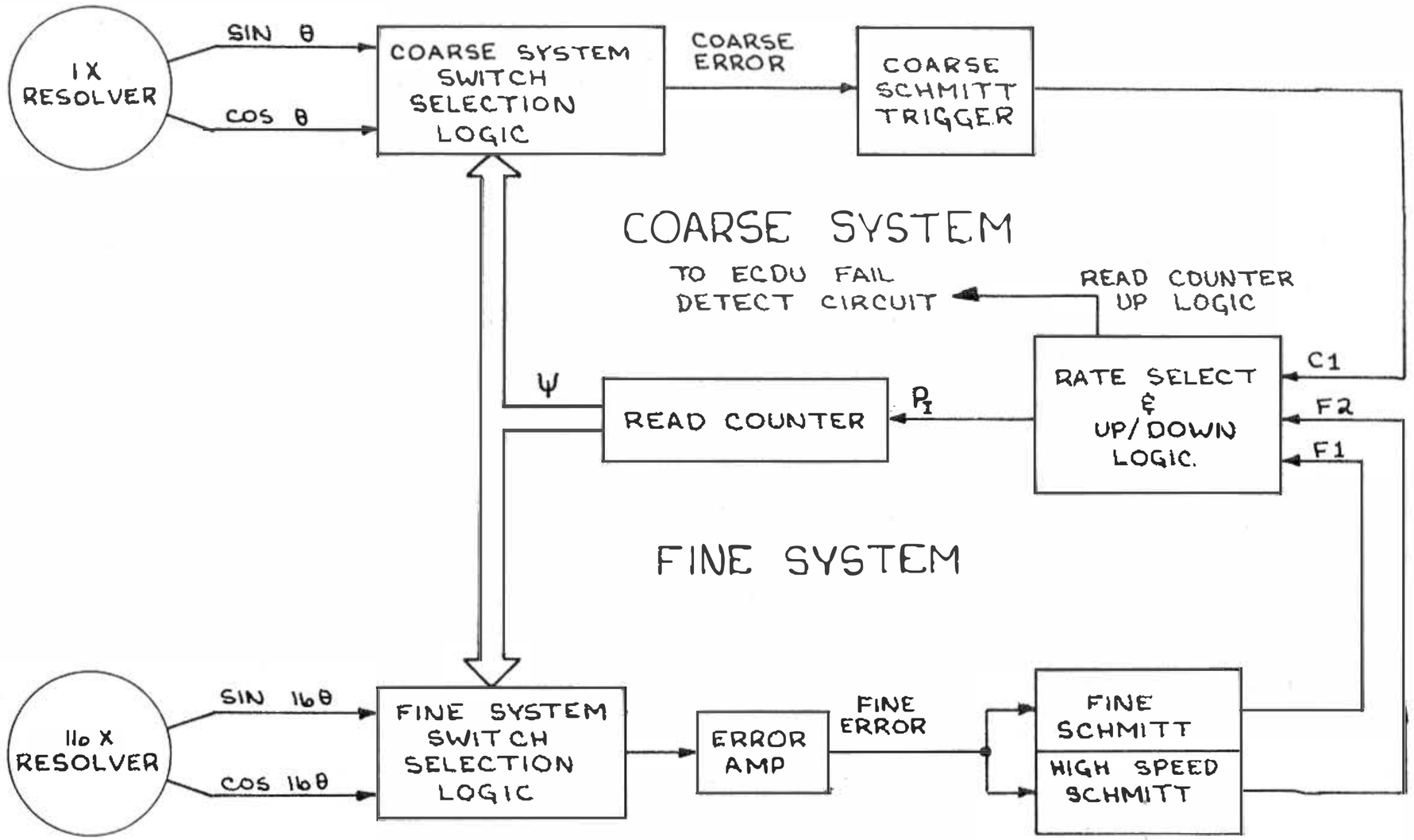

ECDU
READ COUNTER LOOP
BLOCK DIAGRAM

ELECTRONICS COUPLING DISPLAY UNIT ECDU (CONTINUED)

The ECDU is an analog-to-digital converter which utilizes two encoding loops and one read counter to which the computer has access. One loop designated the "fine system" is used to encode 16× gimbal resolver angles. The other, a "coarse system," encodes 1× gimbal resolver angles.

When the difference between a gimbal resolver angle and the ECDU read counter exceeds 8.4 degrees, the "coarse system" has exclusive control of the read counter. For errors smaller than 8.4 degrees, the "fine system" has exclusive control of the read counter.

Coarse System

The coarse system utilizes a system of switch selection logic, weighting resistors, and summing amplifiers to generate a trigonometric identity of the form:

$$-\sin(\theta-\phi) = -\sin\theta\cos\psi + \cos\theta\sin\psi$$

where

θ = the gimbal angle

ψ = the read counter angle

This trigonometric identity is used as an error signal to drive the read counter until ϕ has been isolated to one of eight 45-degree segments.

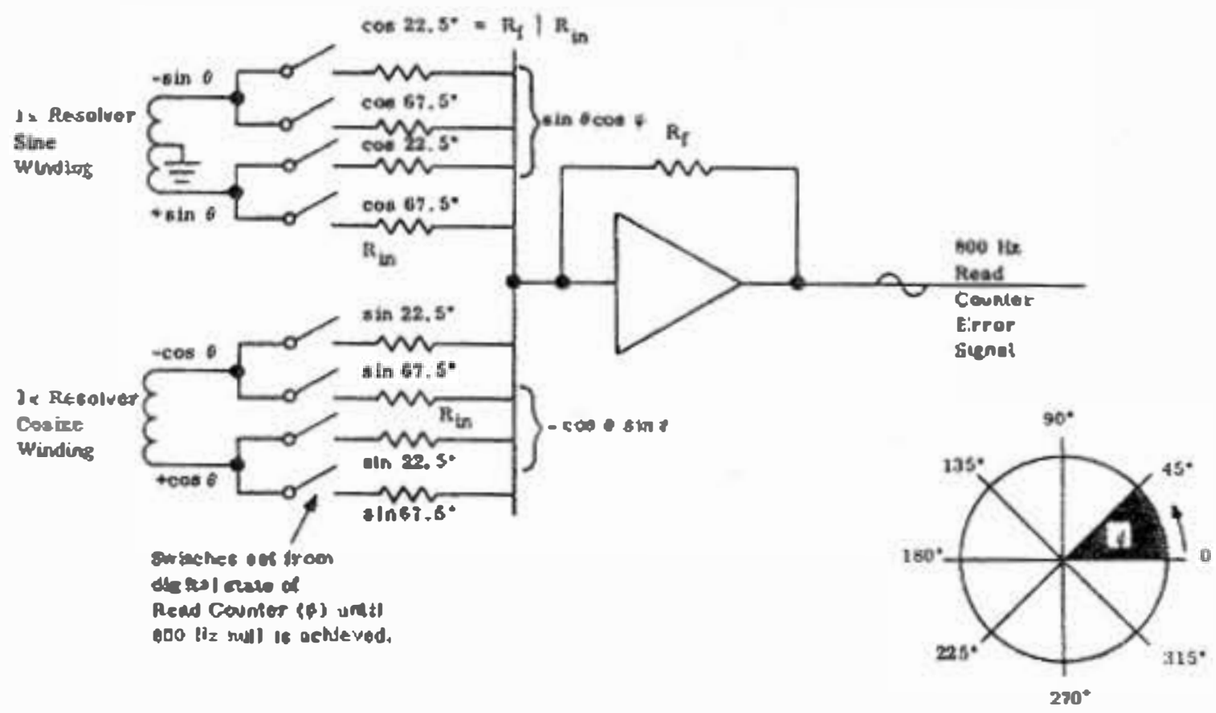

A ladder network provides an additional signal which drives the read counter until ψ has been further isolated to one of 16, 2.8-degree segments.

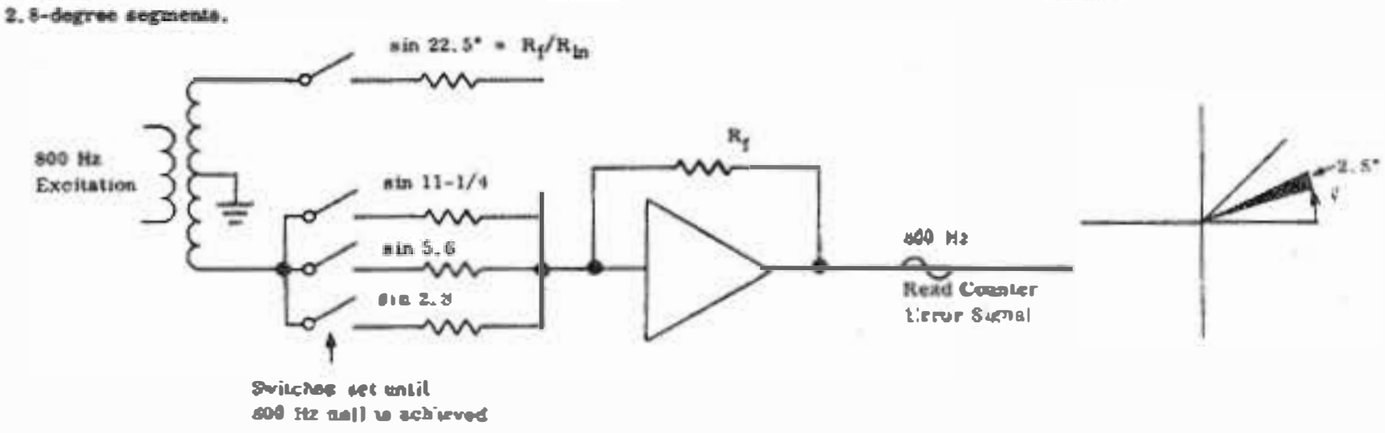

The functional equivalent of the entire coarse system error detecting logic is as shown below.

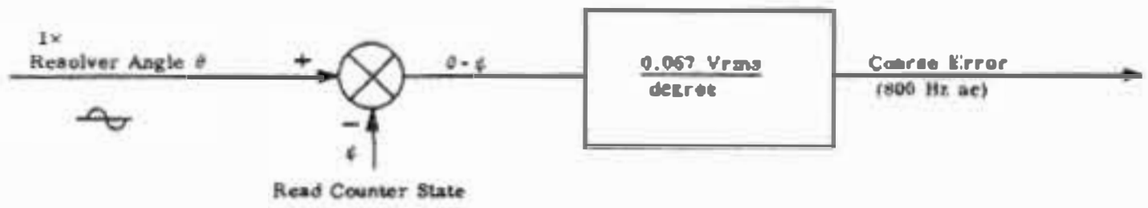

In the manner shown above, the error between the 1× resolver position and the digital state of the read counter is converted to an 800 Hz analog signal. This is converted back into a digital drive signal for the read counter by the "coarse Schmitt trigger and rate selection logic." The coarse Schmitt trigger threshold is set at 0.56 Vrms (8.4 degrees) thereby deactivating the coarse read counter loop when the error between 1× resolver position and the read counter is less than 8.4 degrees. The pulse train output of the Schmitt trigger is interrogated by a 3,600 pps impulse train. When the coarse Schmitt is detected high, the read counter is incremented at a rate of 12.8 kpps, thus sending 16 bits into the read counter in 1/800 of a second. The functional equivalent of this signal processing is shown below.

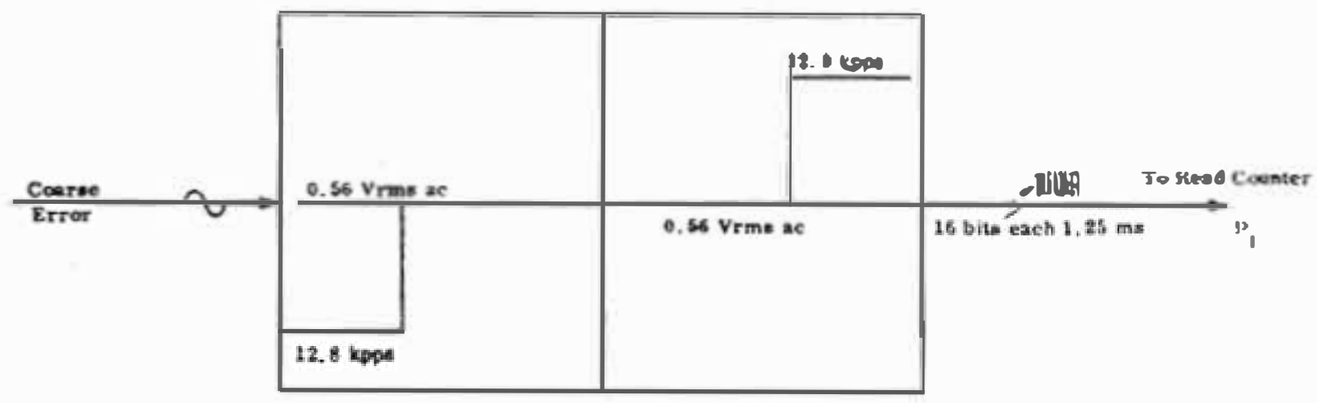

$$\frac{16 \text{ bits}}{\text{burst}} \times \frac{800 \text{ bursts}}{\text{second}} \times \frac{20 \text{ arc-sec}}{\text{bit}} = 70°/\text{second}$$

Coarse Schmitt Trigger and Rate Selection Logic

(The CM optics CDU's do not contain a coarse system.)

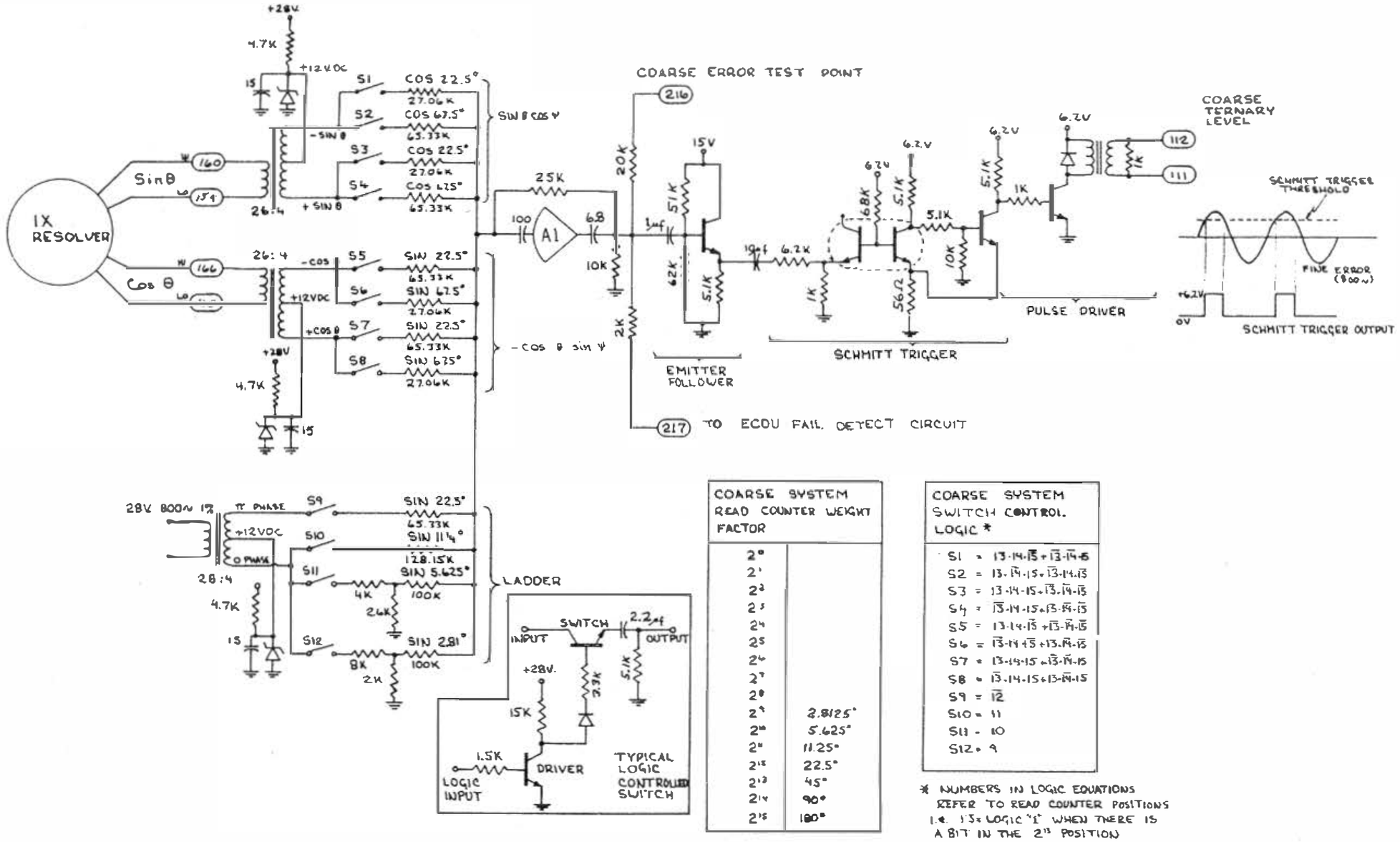

COARSE SYSTEM READ COUNTER WEIGHT FACTOR	
2^0	
2^1	
2^2	
2^3	
2^4	
2^5	
2^6	
2^7	
2^8	
2^9	2.8125°
2^{10}	5.625°
2^{11}	11.25°
2^{12}	22.5°
2^{13}	45°
2^{14}	90°
2^{15}	180°

COARSE SYSTEM SWITCH CONTROL LOGIC *
S1 = $13 \cdot 14 \cdot \overline{15} + \overline{13} \cdot \overline{14} \cdot 15$
S2 = $13 \cdot \overline{14} \cdot 15 + \overline{13} \cdot 14 \cdot \overline{15}$
S3 = $13 \cdot 14 \cdot 15 + \overline{13} \cdot \overline{14} \cdot \overline{15}$
S4 = $\overline{13} \cdot 14 \cdot 15 + 13 \cdot \overline{14} \cdot \overline{15}$
S5 = $13 \cdot 14 \cdot \overline{15} + 13 \cdot \overline{14} \cdot \overline{15}$
S6 = $\overline{13} \cdot 14 + \overline{15} + 13 \cdot \overline{14} \cdot \overline{15}$
S7 = $13 \cdot 14 \cdot 15 + \overline{13} \cdot \overline{14} \cdot 15$
S8 = $\overline{13} \cdot 14 \cdot 15 + 13 \cdot \overline{14} \cdot 15$
S9 = $\overline{12}$
S10 = 11
S11 = 10
S12 = 9

* NUMBERS IN LOGIC EQUATIONS REFER TO READ COUNTER POSITIONS I.E. 13 = LOGIC '1' WHEN THERE IS A BIT IN THE 2^{13} POSITION

ECDU
COARSE SYSTEM
SWITCHING NETWORK

ELECTRONICS COUPLING DISPLAY UNIT ECDU (CONTINUED)

Fine System

The fine system utilizes a system of switch selection logic, weighting resistors, and summing amplifiers to generate the trigonometric identity.

$$-\sin(\theta-\phi) = \sin\theta\cos\phi + \cos\theta\sin\phi$$

This identity is used as an error signal to drive the read counter until ϕ is isolated to one of 256, 0.088-degree segments. Mechanization of this identity is similar to that of the coarse system except for the following significant differences.

1. The fine system generates an internal reference cos $(\theta - \phi)$ to excite ladder switches.
2. The 16× resolver angle is divided into 16 segments of 22.5 degrees resolver electrical.
3. The ladder divides each 22.5-degree segment into 256 segments of 0.088 degree resolver electrical. The 1× mechanical equivalent is 0.088 degree/16 or 0.0056 degree (20 seconds of arc).
4. A quadrature reject network is employed to achieve a true loop null.

The functional equivalent of the fine system error detection logic is shown below.

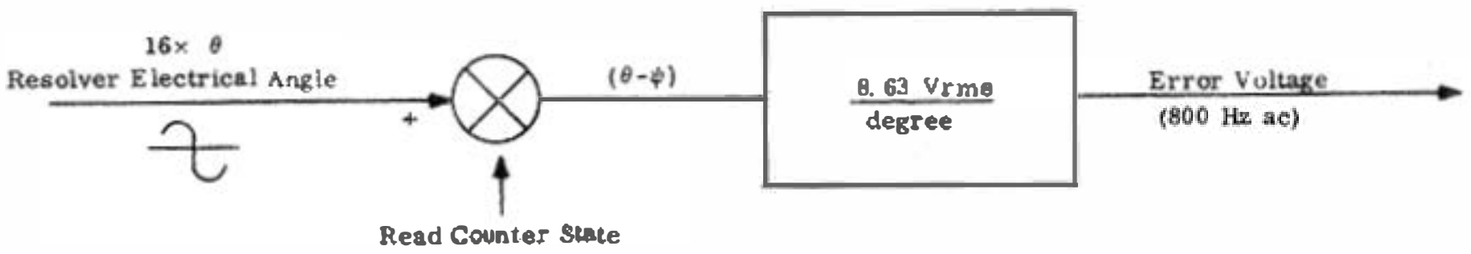

Fine systems error signals are converted back into digital read counter drive signals by a fine Schmitt trigger system and a high speed Schmitt trigger system operating in tandem. Each is interrogated by the same 1,600 pps impulse train. When the high speed Schmitt trigger is detected high, the read counter is incremented at a rate of 12,800 pps. When the fine Schmitt trigger is detected high, the read counter is incremented at a rate of 800 pps. The threshold level of the fine system Schmitt triggers is set such that the rate selection logic shown below is achieved.

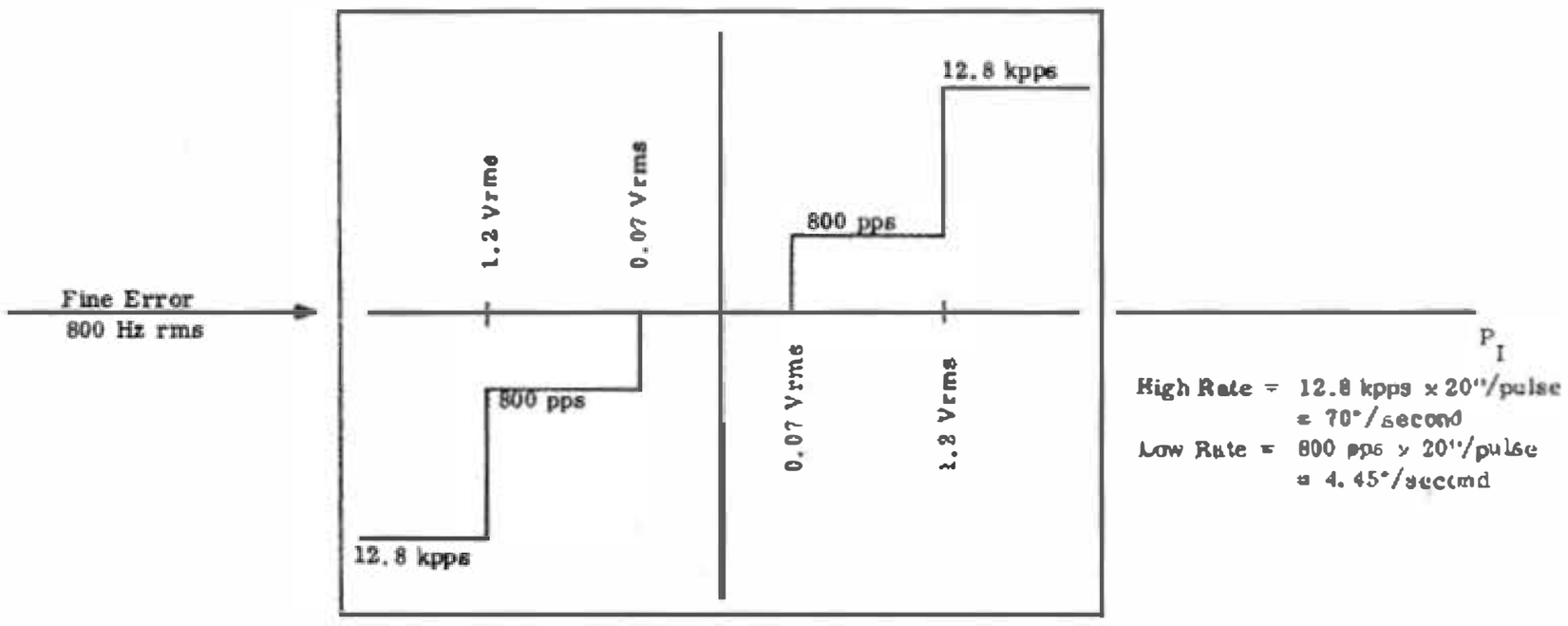

Schmitt Trigger Threshold

$$1.2\ \text{Vrms} \times \frac{1\ \text{degree}}{8.63\ \text{V/°}} = 2.2\ \text{degrees read counter}$$

$$0.07\ \text{Vrms} \times \frac{1\ \text{degree}}{8.63\ \text{V/°}} \approx 0.131\ \text{degree read counter}$$

The rate select and up/down logic processes the sampled output of the Schmitt triggers to determine at which rate the read counter is incremented. If the high speed Schmitt is "on," the increment rate is 12,800 pps or 16 bits in one sample time. If the fine Schmitt is "on," the increment rate is 800 pps or 1 bit in one sample time.

Read Counter

The read counter is a 16-stage digital counter with an IMU angle granularity of 20 seconds/bit. Inputs to the read counter are controlled by rate select and up/down logic. The output is used by the fine system switch selection logic to produce the fine error signal. Access to the contents of the read counter by both the computer and the error counter is serial only. Access by the computer is to the first order bit ($\Delta 2^0$). Access by the error counter is to the third order bit ($\Delta 2^3$). Because of the above, the count rate to the computer is four times faster than to the error counter. Computer bits, however, have one-fourth the weight factor of those transferred to the error counter.

Functionally, the read counter is represented as an integrator with a count rate in degrees/second and an output in degrees.

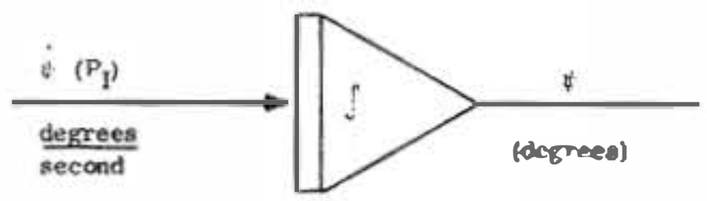

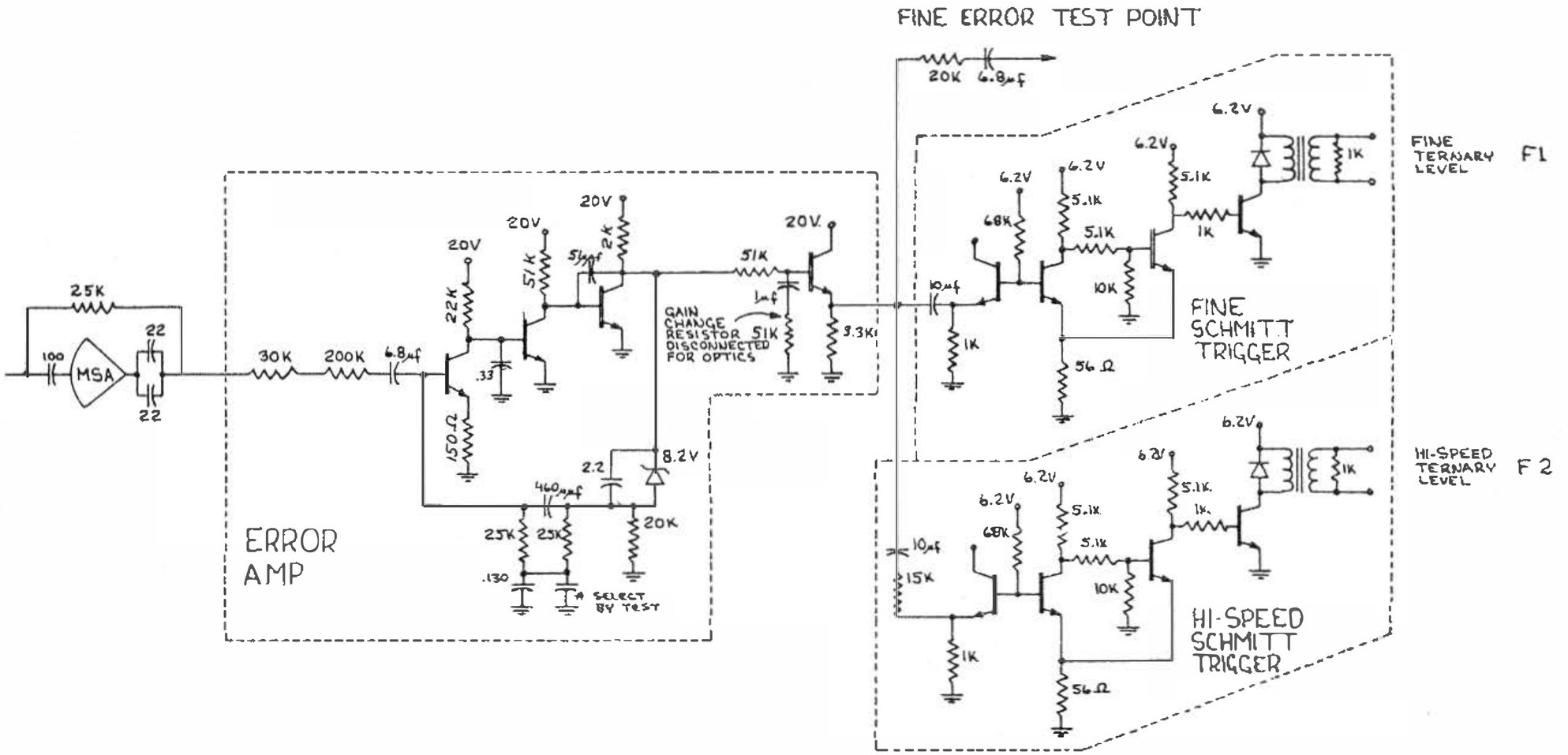

ECDU
ERROR AMP
AND SCHMITT TRIGGERS

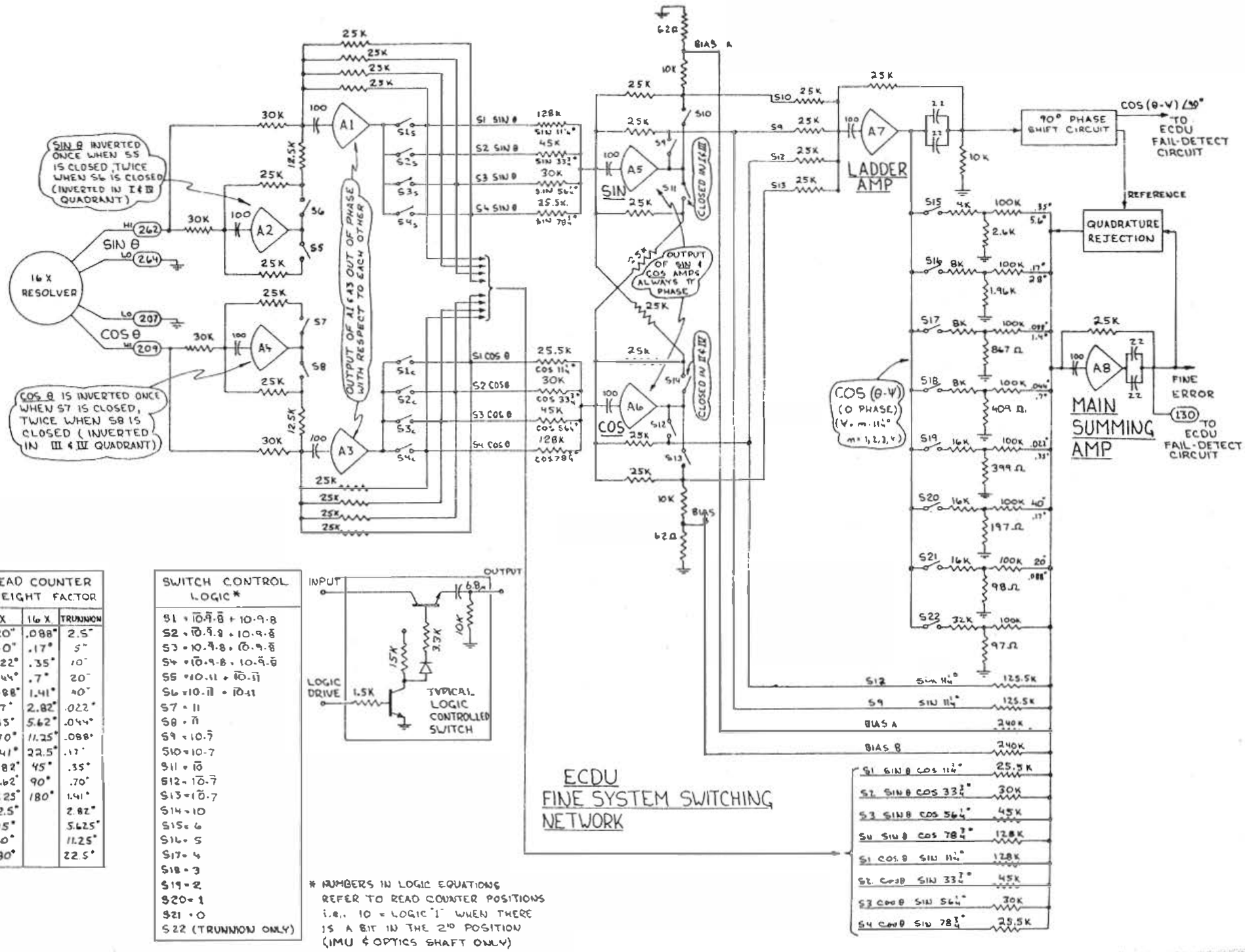

READ COUNTER WEIGHT FACTOR			
	1X	16X	TRUNNION
2^0	20"	.088°	2.5°
2^1	40"	.17°	5°
2^2	.022°	.35°	10°
2^3	.044°	.7°	20°
2^4	.088°	1.41°	40°
2^5	.17°	2.82°	.022°
2^6	.35°	5.62°	.044°
2^7	.70°	11.25°	.088°
2^8	1.41°	22.5°	.17°
2^9	2.82°	45°	.35°
2^{10}	5.62°	90°	.70°
2^{11}	11.25°	180°	1.41°
2^{12}	22.5°		2.82°
2^{13}	45°		5.625°
2^{14}	90°		11.25°
2^{15}	180°		22.5°

SWITCH CONTROL LOGIC*
S1 = $\bar{10}\cdot\bar{9}\cdot\bar{8} + 10\cdot9\cdot8$
S2 = $\bar{10}\cdot\bar{9}\cdot8 + 10\cdot9\cdot\bar{8}$
S3 = $10\cdot\bar{9}\cdot8 + \bar{10}\cdot9\cdot\bar{8}$
S4 = $\bar{10}\cdot9\cdot8 + 10\cdot\bar{9}\cdot\bar{8}$
S5 = $10\cdot11 + \bar{10}\cdot\bar{11}$
S6 = $10\cdot\bar{11} + \bar{10}\cdot11$
S7 = 11
S8 = $\bar{11}$
S9 = $10\cdot\bar{7}$
S10 = 10·7
S11 = $\bar{10}$
S12 = $10\cdot\bar{7}$
S13 = $\bar{10}\cdot7$
S14 = 10
S15 = 6
S16 = 5
S17 = 4
S18 = 3
S19 = 2
S20 = 1
S21 = 0
S22 (TRUNNION ONLY)

* NUMBERS IN LOGIC EQUATIONS REFER TO READ COUNTER POSITIONS i.e., 10 = LOGIC "1" WHEN THERE IS A BIT IN THE 2^{10} POSITION (IMU & OPTICS SHAFT ONLY)

ECDU
FINE SYSTEM SWITCHING NETWORK

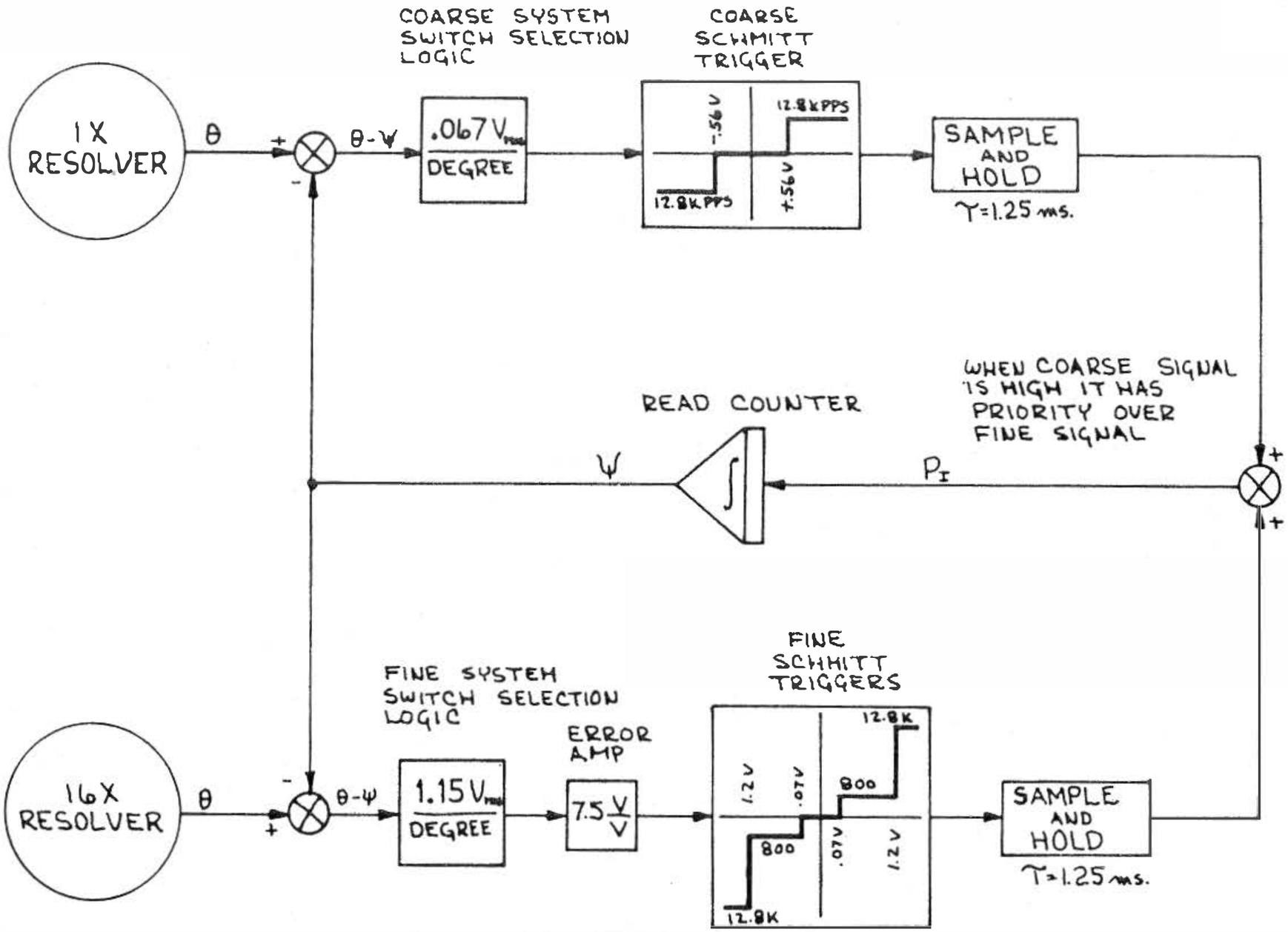

READ COUNTER LOOP FUNCTIONAL BLOCK DIAGRAM

IMU/CDU/AGC INTERFACE DIAGRAM

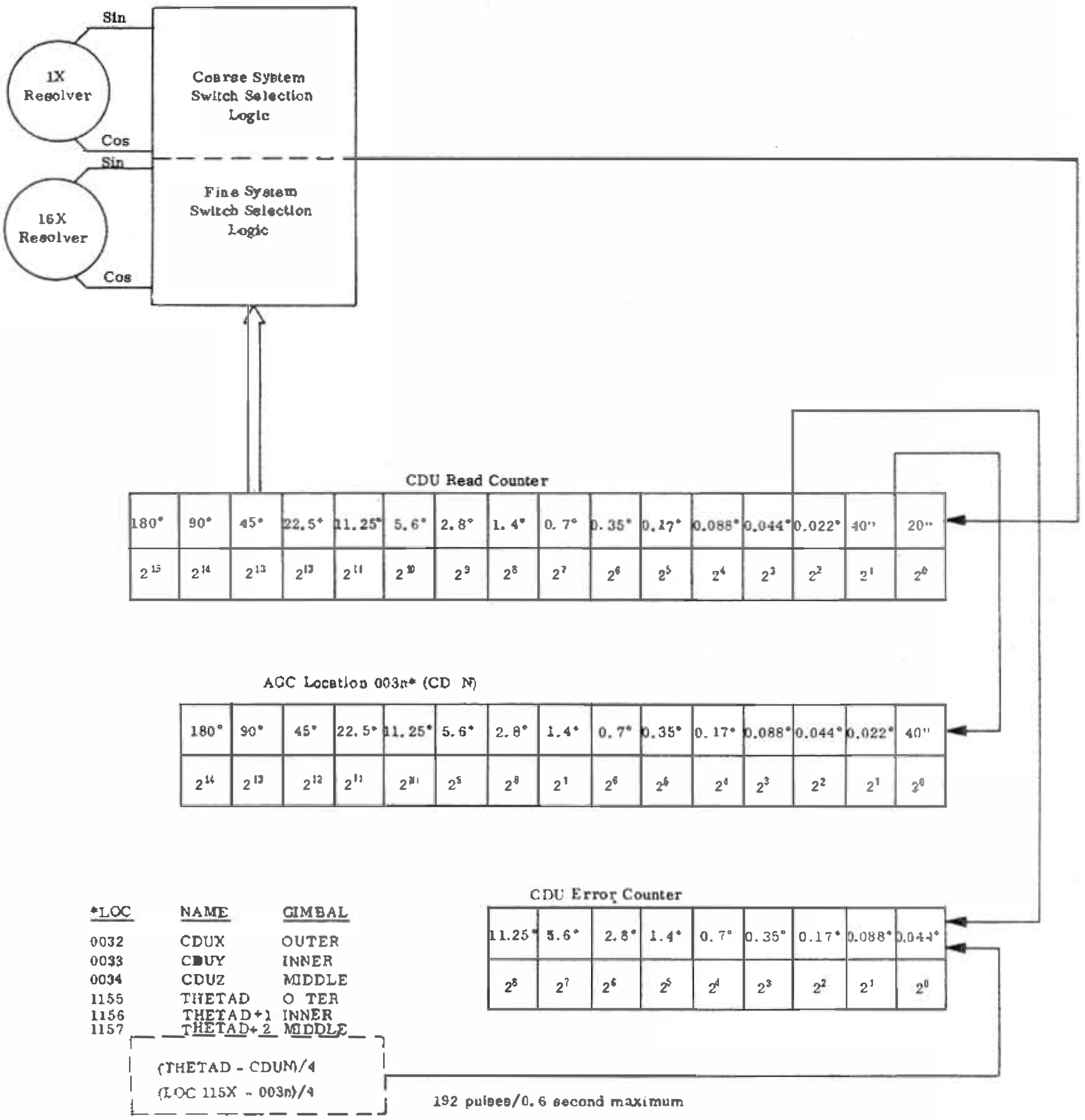

*LOC	NAME	GIMBAL
0032	CDUX	OUTER
0033	CDUY	INNER
0034	CDUZ	MIDDLE
1155	THETAD	OUTER
1156	THETAD+1	INNER
1157	THETAD+2	MIDDLE

IMU GIMBAL ANGLE AND OPTICS SHAFT SCALING DIAGRAM

Contents of Respective Location in AGC

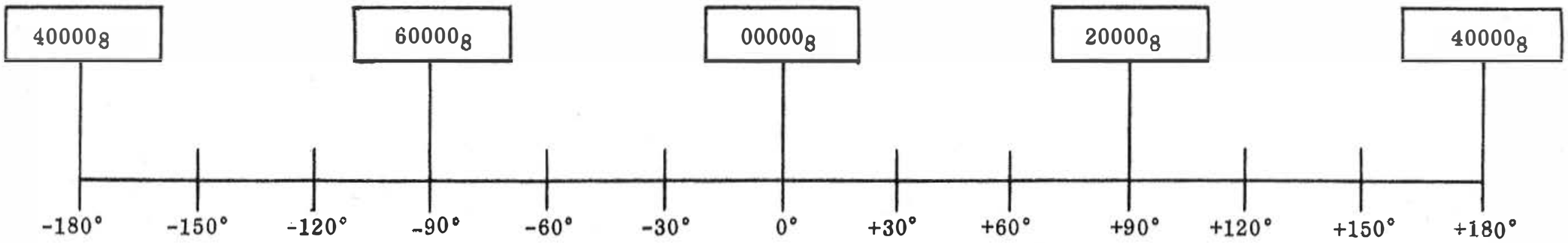

Actual Optics Shaft Angle or IMU Gimbal Angle

DSKY Indication and CRT Display on RTCC

+180° +210° +240° +270° +300° +330° 0° +30° +60° +90° +120° +150° +180°

NOTE: For Colossus, V16 N91 monitors the optics shaft angle in R1 (+XXX.XX); V16 N20 monitors the IMU gimbal angles as follows:

R1: Outer Gimbal (+XXX.XX)
R2: Inner Gimbal (+XXX.XX)
R3: Middle Gimbal (+XXX.XX)

OPTICS TRUNNION SCALING DIAGRAM

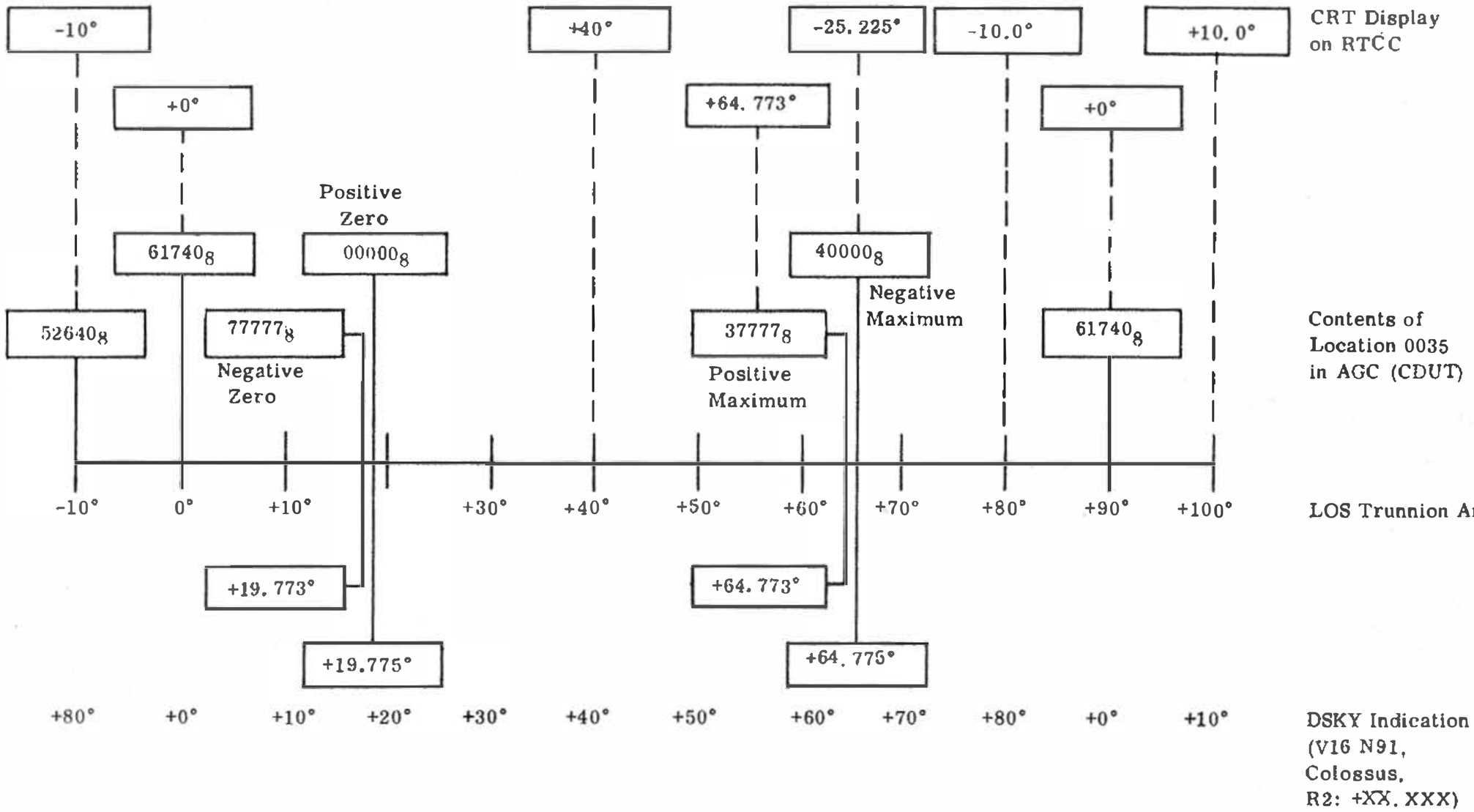

NOTE: CDUT (LOC 0035) is loaded with a -19. 775° bias during ZERO OPTICS. This bias produces positive driving commands for angles up to +64. 775° in the CMC mode. Without the bias, the CMC mode would drive the trunnion to the negative stop for command angles of 45° or greater.

RENDEZVOUS RADAR/CDU/LG INTERFACE DIAGRAM

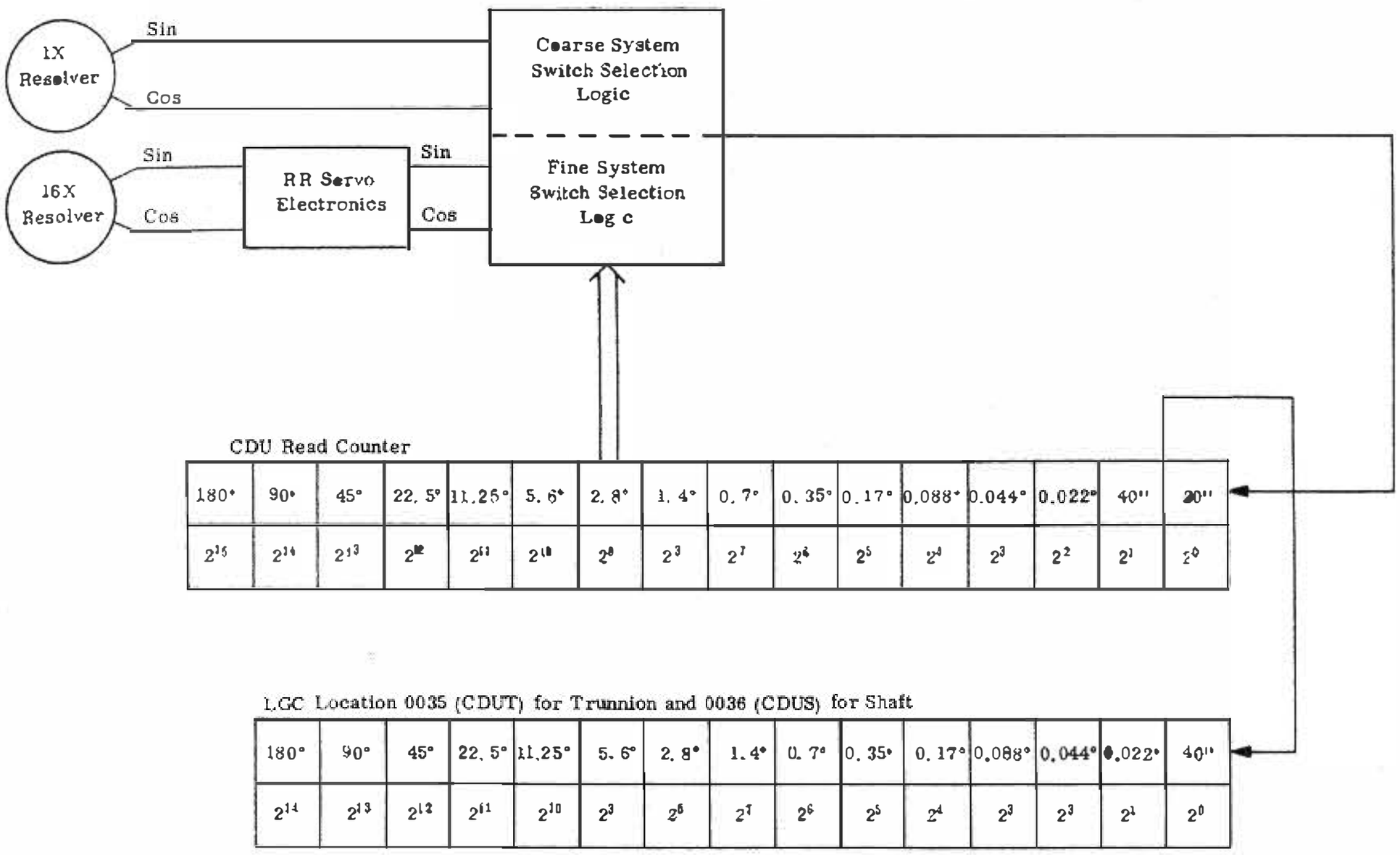

Note: RR scaling is the same as IMU gimbal scaling.

LUMINARY RR Angle Readout (V16 N72)
R1 = XXX.XX Trunnion
R2 = XXX.XX Shaft

OPTICS TRUNNION/CDU/AGC INTERFACE DIAGRAM

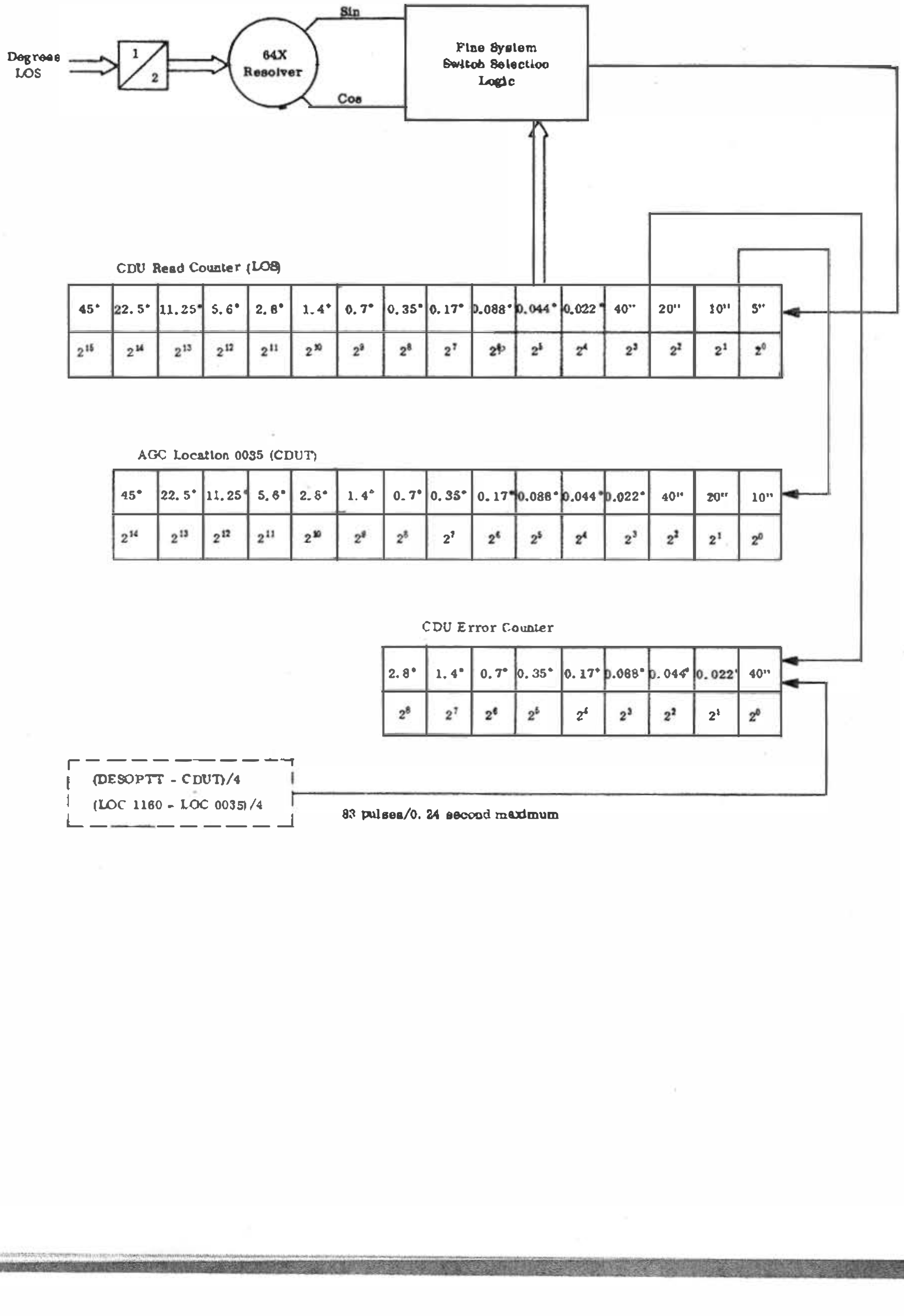

OPTICS SHAFT/CDU/AOC INTERFACE DIAGRAM

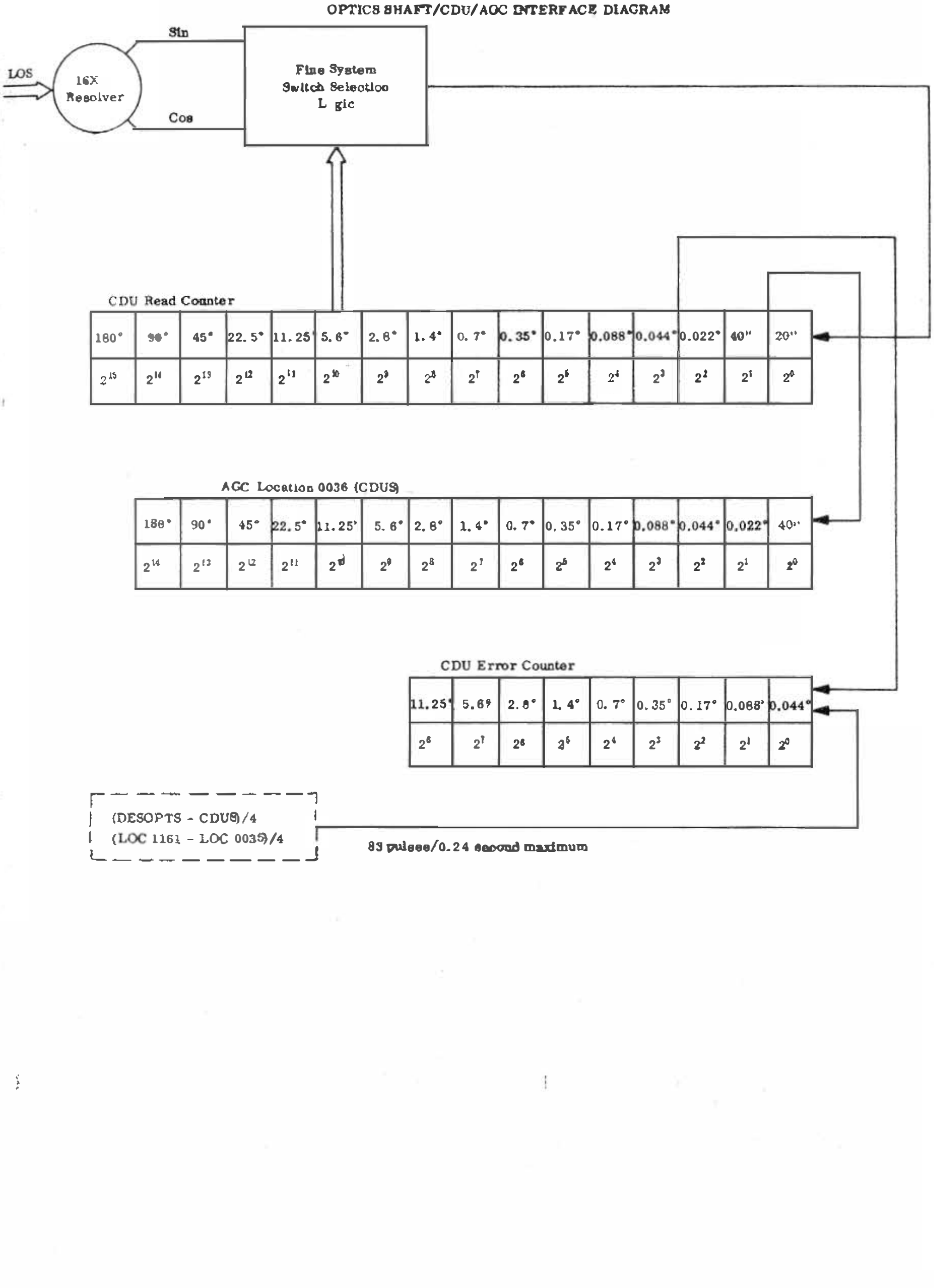

CM OPTICS

The Optical Subsystem has three major modes of operation (MANUAL, COMPUTER, and ZERO OPTICS).

The configuration of the Sextant Trunnion and Shaft servos determines the mode of operation and is controlled by switches on the G&N Indicator Control Panel.

ZERO OPTICS is a Sextant velocity follow-up servo commanded to zero degrees by position measuring resolvers mounted in the SXT head. The actuating errors are the sine windings of the 64X and 1X resolvers for trunnion and the 16X and 1/2 X resolvers for shaft.

COMPUTER operate optics uses the Sextant servos in an integrator configuration that accepts position commands from the CDU DAC's. The computer supplies the CDU Error Counter with pulses every 0.5 seconds. At each 0.5 seconds, the computer recalculates the number of pulses required to position the LOS using information obtained from the CDU Read Counter.

MANUAL* mode uses the Sextant servos in an integrator configuration that accepts velocity commands from the Hand Controller. There are two sub-modes of the MANUAL mode, DIRECT and RESOLVED.

For the DIRECT MODE up and down Hand Controller motion results in increasing and decreasing trunnion angles respectively and right and left Hand Controller motion results in increasing and decreasing shaft angles respectively.

For the RESOLVED MODE up-down or left-right Hand Controller motion results in up-down or left-right image motion respectively.

The SCANNING TELESCOPE SHAFT servo follows the Sextant shaft servo in all modes of operation of the Optical Subsystem.

The SCANNING TELESCOPE TRUNNION servo follows the Sextant trunnion servo in all modes of operation of the Optical Subsystem except when the Optical Subsystem is in the MANUAL mode and the TEL TRUN is set to 0° offset and 25° offset. In the 0° offset and 25° offset modes, the SCT trunnion angle is held at 0° and 25° respectively.

* During Program 24, the SXT integrators accept velocity commands from the Hand Controller and the CDU DAC's. The computer supplies rate commands to the shaft and trunnion CDU Error Counters (by setting bit 2 of Channel 12, Enable Optics CDU Error Counters) and inhibits feedback from the Read Counters to the Error Counters (by setting bit 8 of Channel 12, TVC Enable).

BLOCK II OPTICAL SUBSYSTEM FUNCTIONAL DIAGRAM

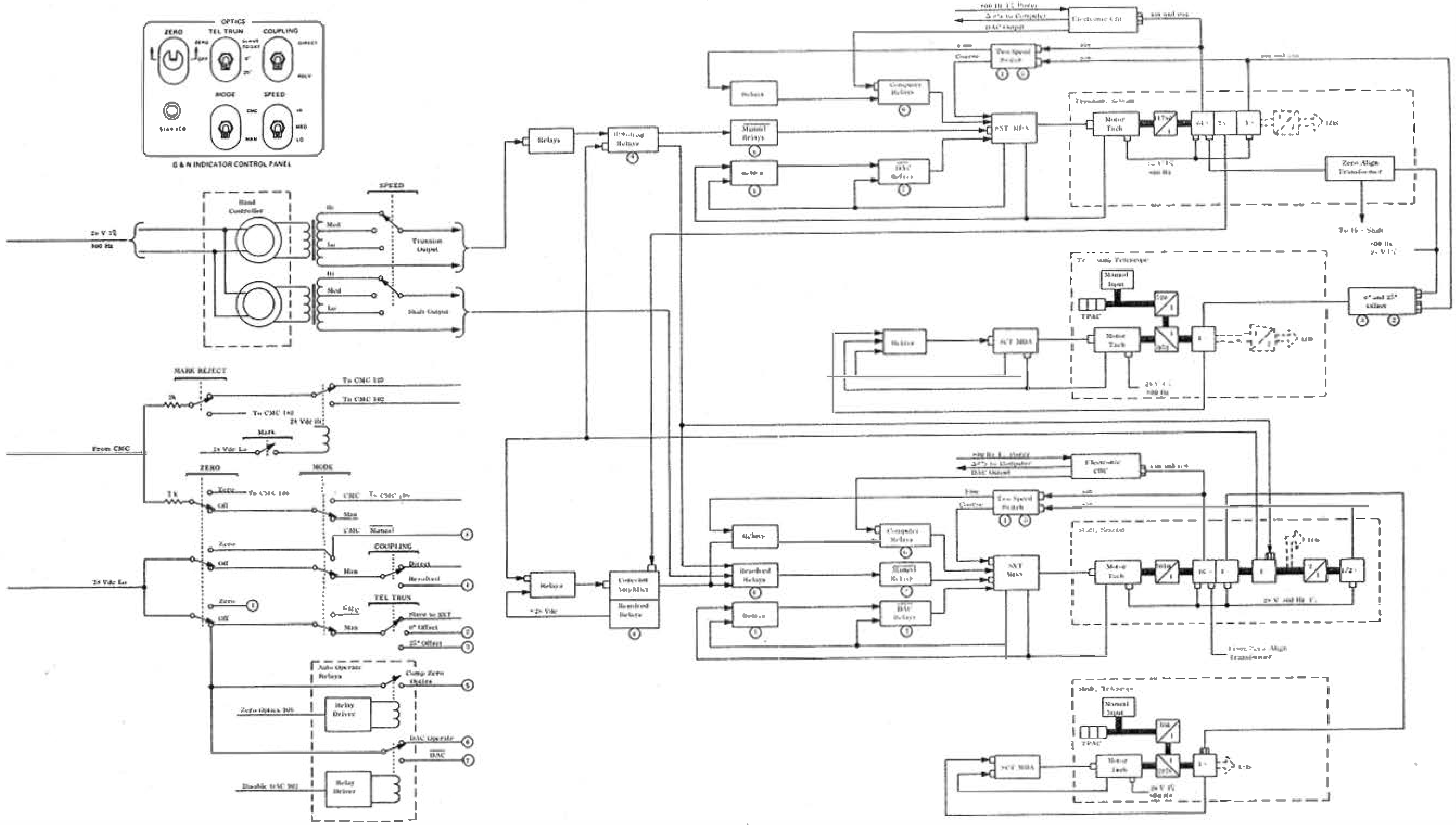

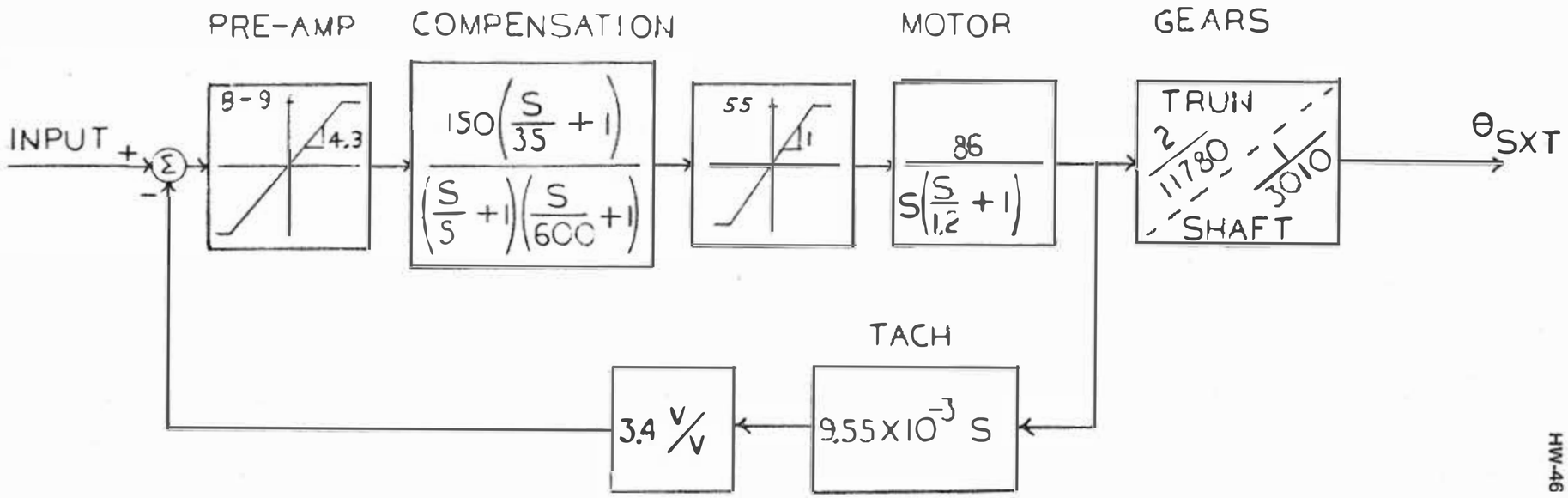

HW-46

IDEAL VERSION

SXT INTEGRATORS

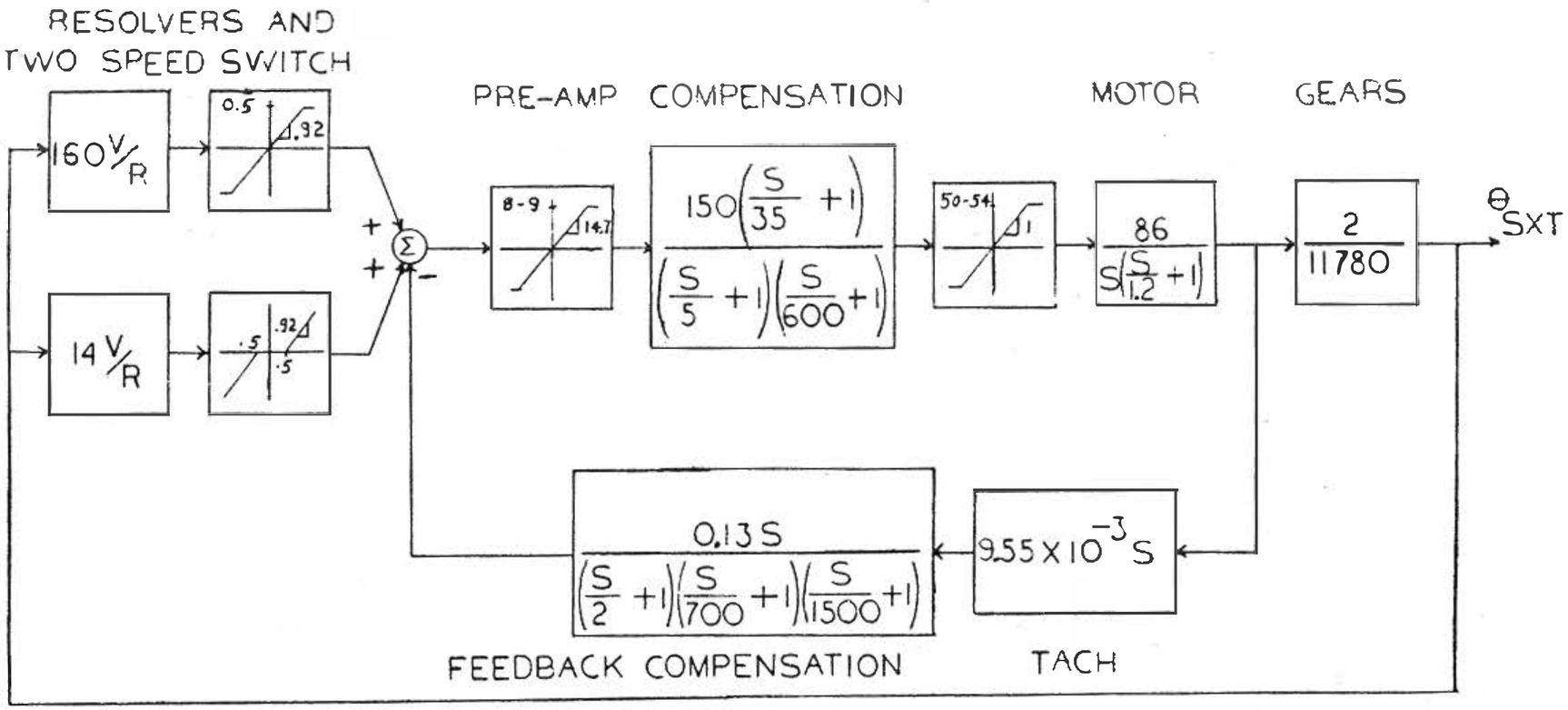

HW 47

IDEAL VERSION

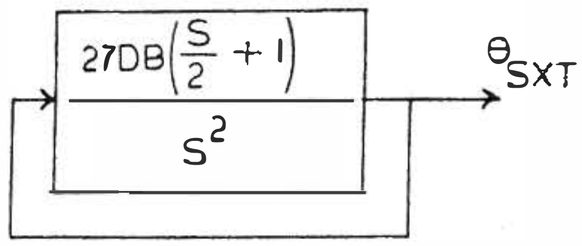

TRUNNION ZERO OPTICS SERVO

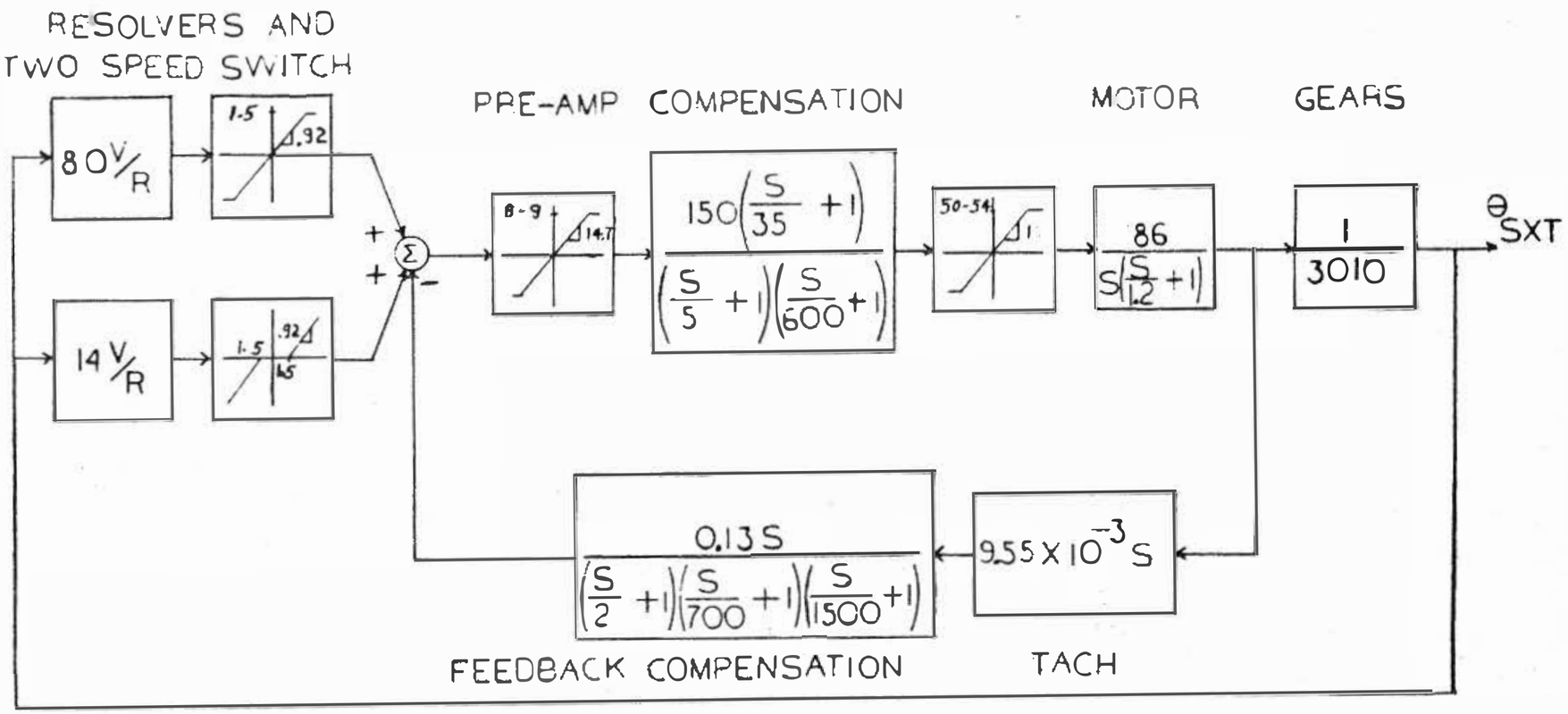

HW-48

IDEAL VERSION

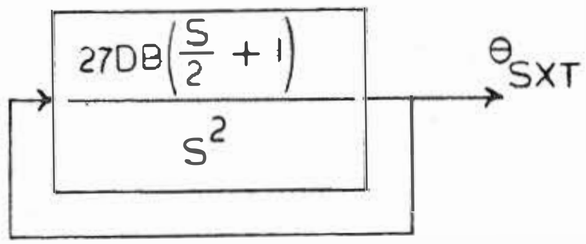

SHAFT ZERO OPTICS SERVO

TRUNNION COMPUTER OPERATE MODE FUNCTIONAL BLOCK DIAGRAM

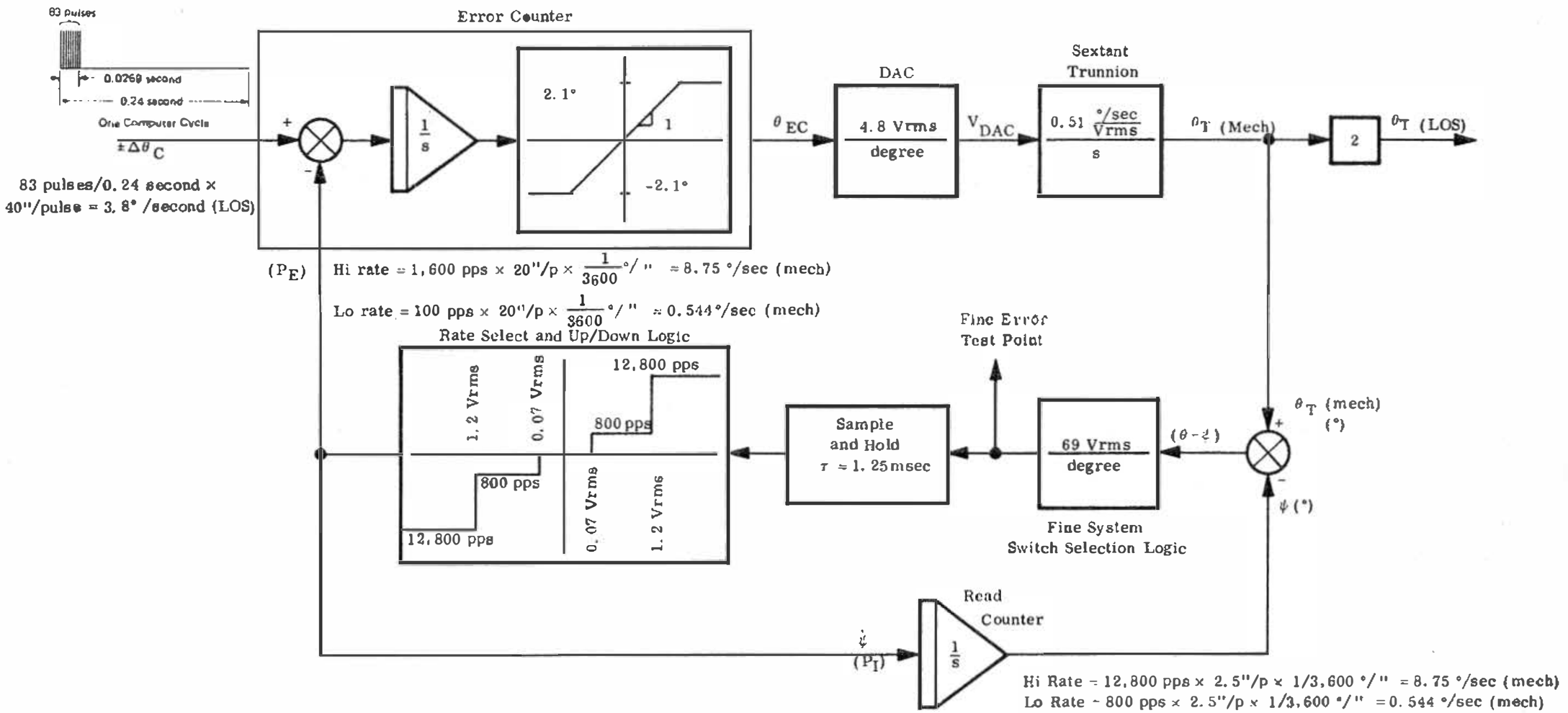

OPTICS TRUNNION DRIVING LIMITATIONS

OPTICS TRUNNION SCALING DIAGRAM

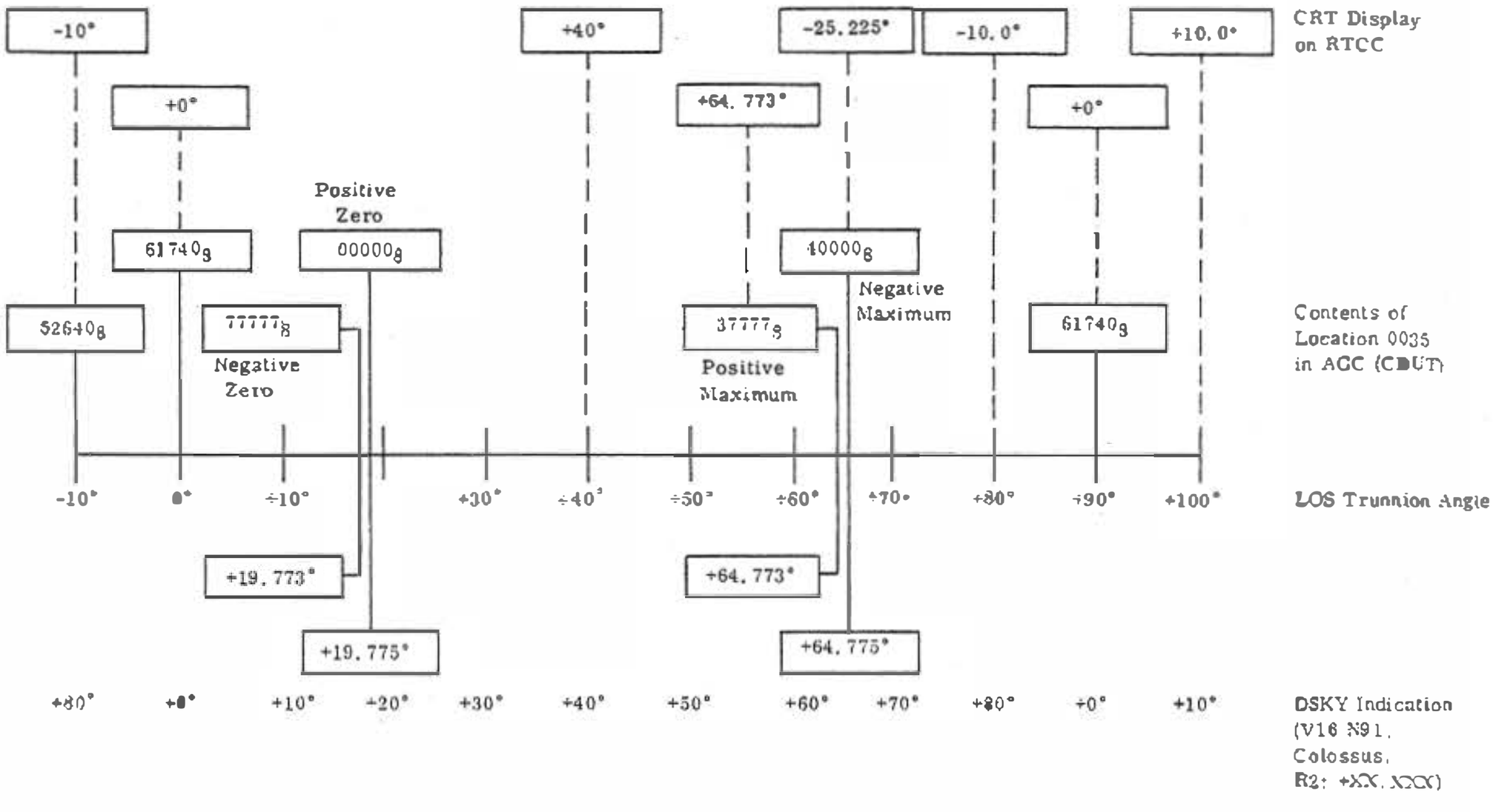

NOTE: CDUT (LOC 0035) is loaded with a -19.775° bias during ZERO OPTICS. This bias produces positive driving commands for angles up to ±64.775° in the CMC mode. Without the bias, the CMC mode would drive the trunnion to the negative stop for command angles of 45° or greater.

Since optics trunnion scaling is 9.88 arc-sec per data bit, the 14-bit CDUT register in the Computer will overflow (40000_8) at 45 degrees LOS*. This overflow is interpreted by the Computer as a negative angle when in reality it is not. By biasing the CDUT location (register 035) in the Computer by -19.775 degrees, the counter (035) will not overflow until an LOS angle of 64.775 degrees (40000_8) is reached. In this case, the Computer (optics trunnion driving routine) interprets an overflow as -45.000 degrees + 19.775 degrees or -25.225 degrees.

The maximum usable trunnion angle is approximately 57 degrees. Beyond this angle the line of sight is completely vignetted.

*LOS = Line of Sight

The operational effects of trunnion biased overflow on the CMC Operate Optics mode is summarized below.

1. OPTICS CMC TRUNNION POSITIONING BETWEEN 0 AND 64.773 DEGREES

Any angle in this range can be commanded from within the 0 to 64.7-degree range and the Computer will drive the trunnion to the correct position. If an angle greater than 64.773 degrees is commanded from within the 0 to 64.7-degree range, the trunnion will be driven into the 0-degree mechanical stop. This is because the Computer thinks a negative angle has been commanded.

2. OPTICS CMC TRUNNION POSITIONING BETWEEN 64.775 AND 90 DEGREES

Any angle in this range can be commanded from within this range and the Computer will drive the trunnion to the correct position. If an angle less than 64.775 degrees is commanded from within the 64.775 to 90-degree range, the trunnion will be driven into the 90-degree mechanical stop. This is because the Computer thinks a positive angle has been commanded.

3. OPTICS LOOP AMBIGUITY AT 64.775 DEGREES

The Computer Operate Optics mode is a multiloop position followup servo operated under control of the Computer. The Computer supplies a maximum of 165 command pulses (1.83 degrees) each 480 milliseconds (ms) in the form of a 3,200 pps burst. The response of the Optics is then measured by the Computer once each 480 ms and appropriate correction commands are issued. This sample data loop has an ambiguity at 64.775 degrees for the following two cases.

a. Case 1: Initial Trunnion Between 0 and 64.773 Degrees and Angle Close to 64.773 Degrees is Commanded

The Optics will begin driving correctly. If a servo overshoot beyond 64.773 degrees occurs, the CDUT will overflow with the result that the trunnion is driven into the 90-degree mechanical stop.

b. Case 2: Initial Trunnion Between 64.775 and 90 Degrees and Angle Close to 64.775 Degrees is Commanded

If the servo overshoot is of sufficient magnitude such that a CDUT angle of less than 64.775 degrees is detected, the trunnion is driven into the 0-degree mechanical stop.

SHAFT COMPUTER OPERATE MODE FUNCTIONAL BLOCK DIAGRAM

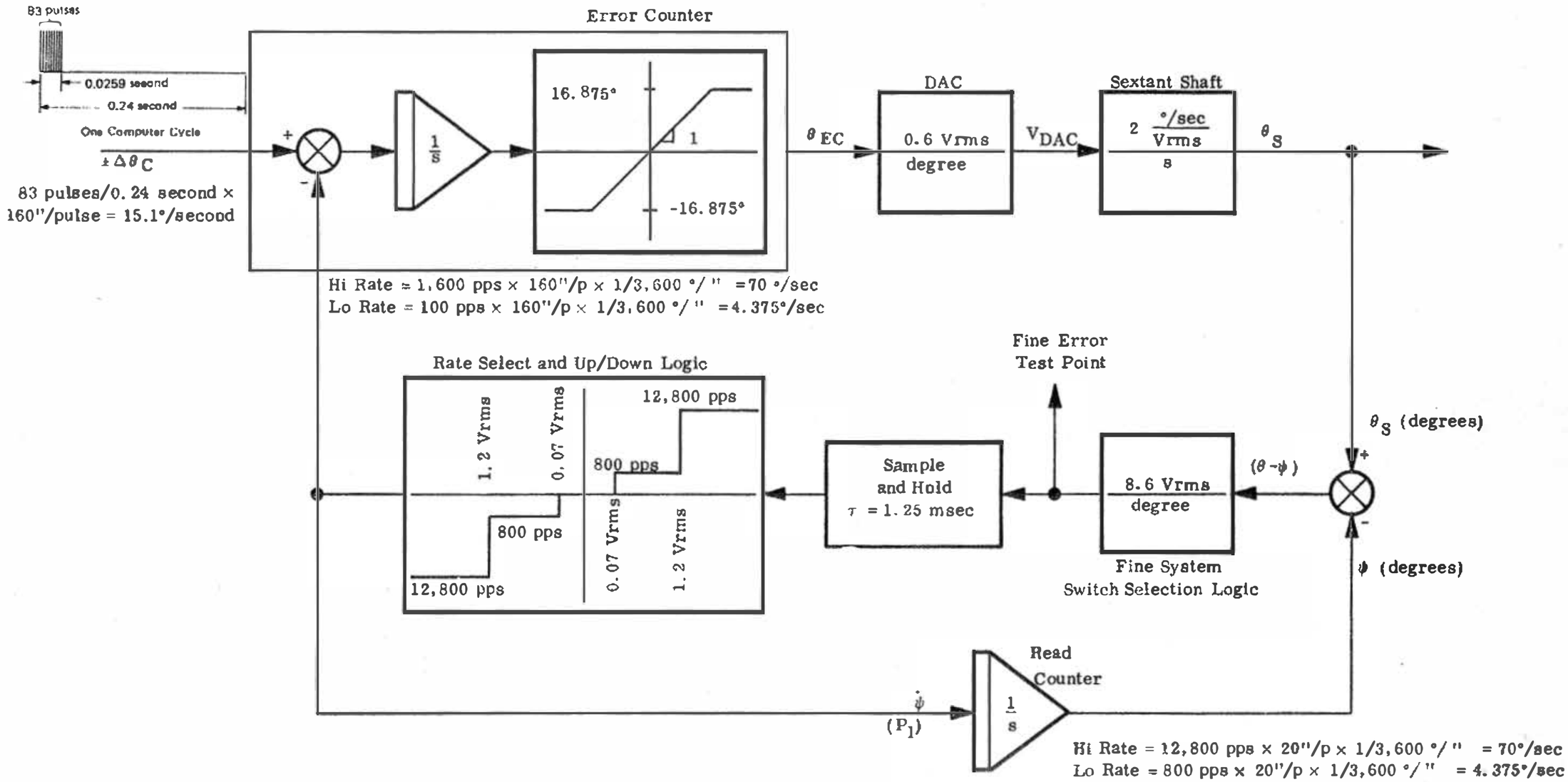

HW-52

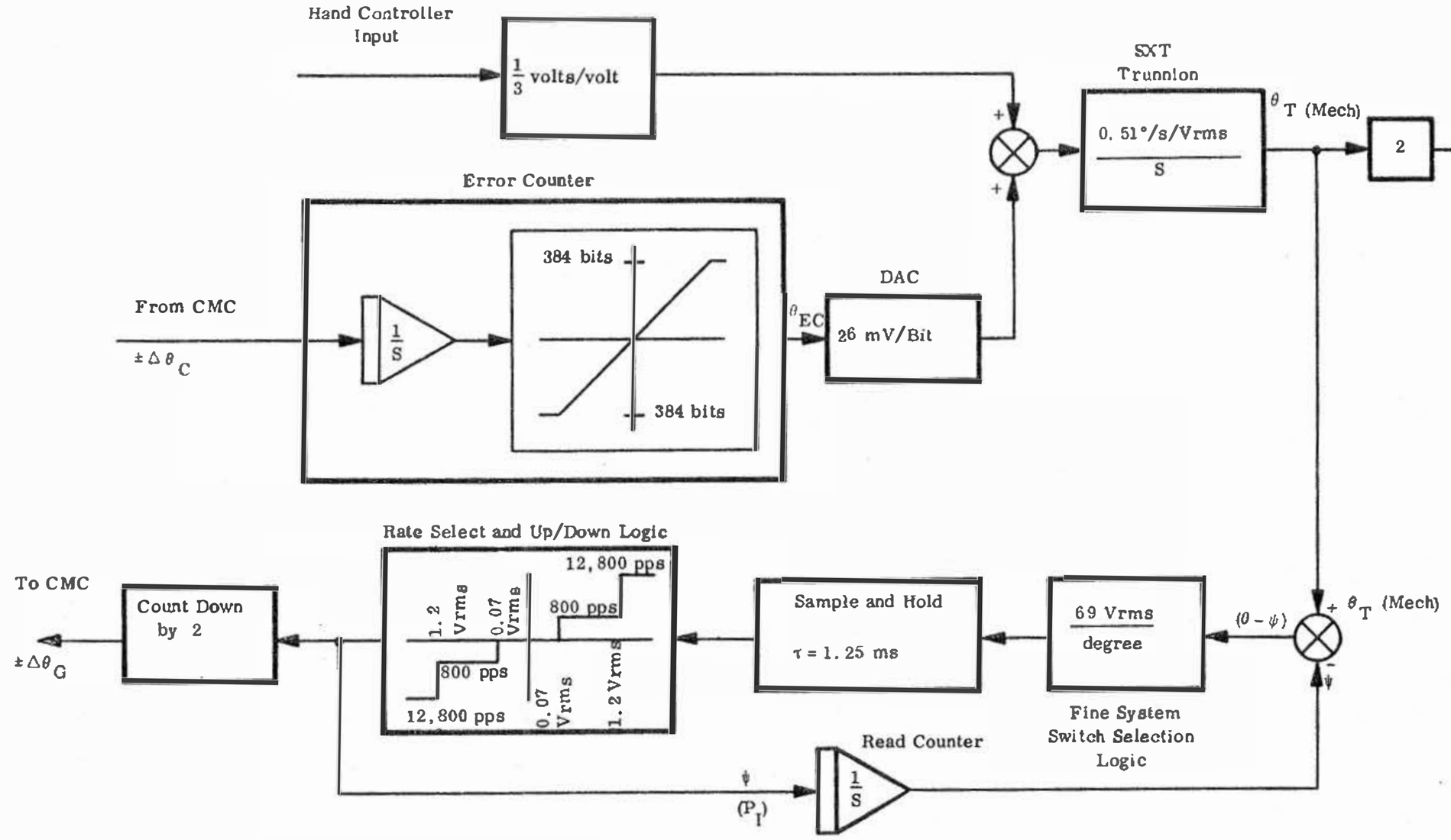

Bit 2 of Channel 12 is set to enable the Error Counter.
Bit 8 of Channel 12 is set to inhibit Read Counter to Error Counter feedback.

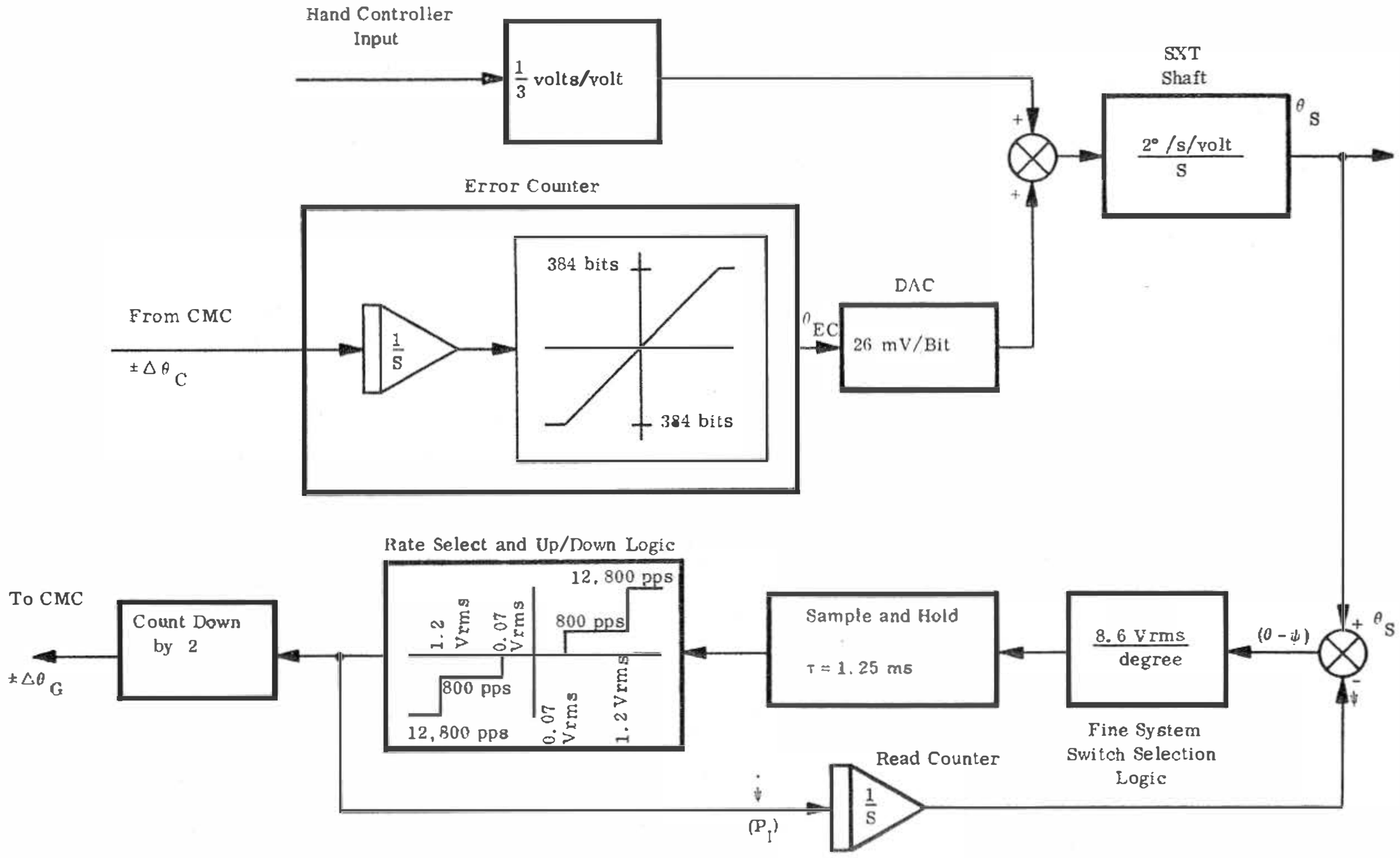

Bit 2 of Channel 12 is set to enable the Error Counter.
Bit 8 of Channel 12 is set to inhibit Read Counter to Error Counter feedback.

RESOLVER PRE-AMP COMPENSATION MOTOR GEARS

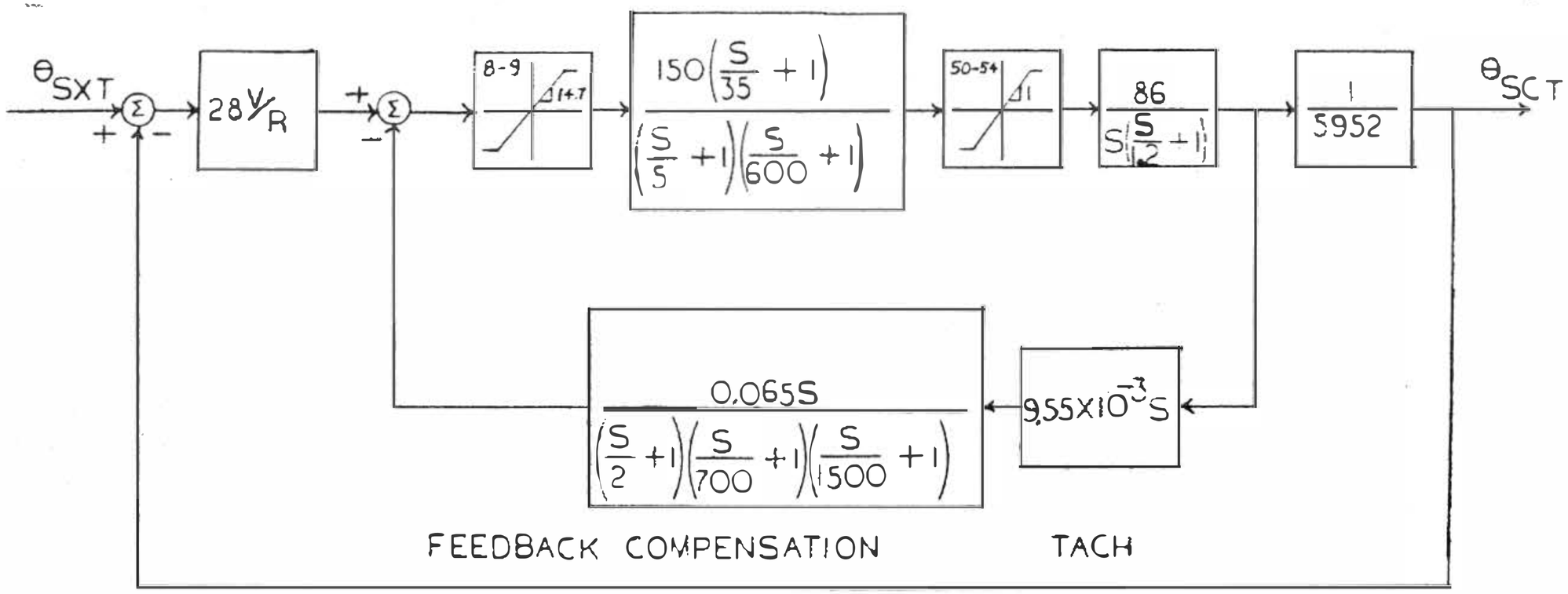

IDEAL VERSION

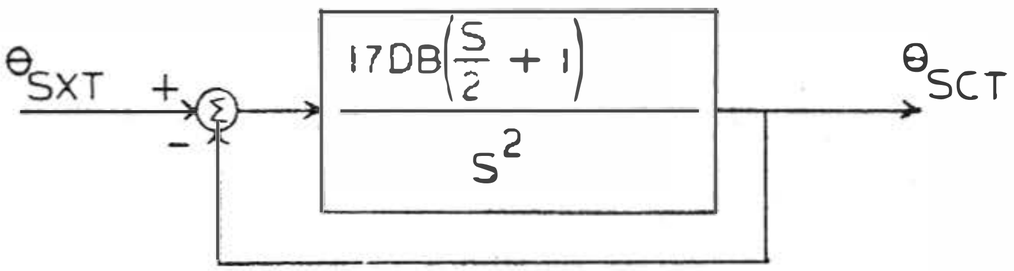

SCT TRUNNION SERVO

HW-55

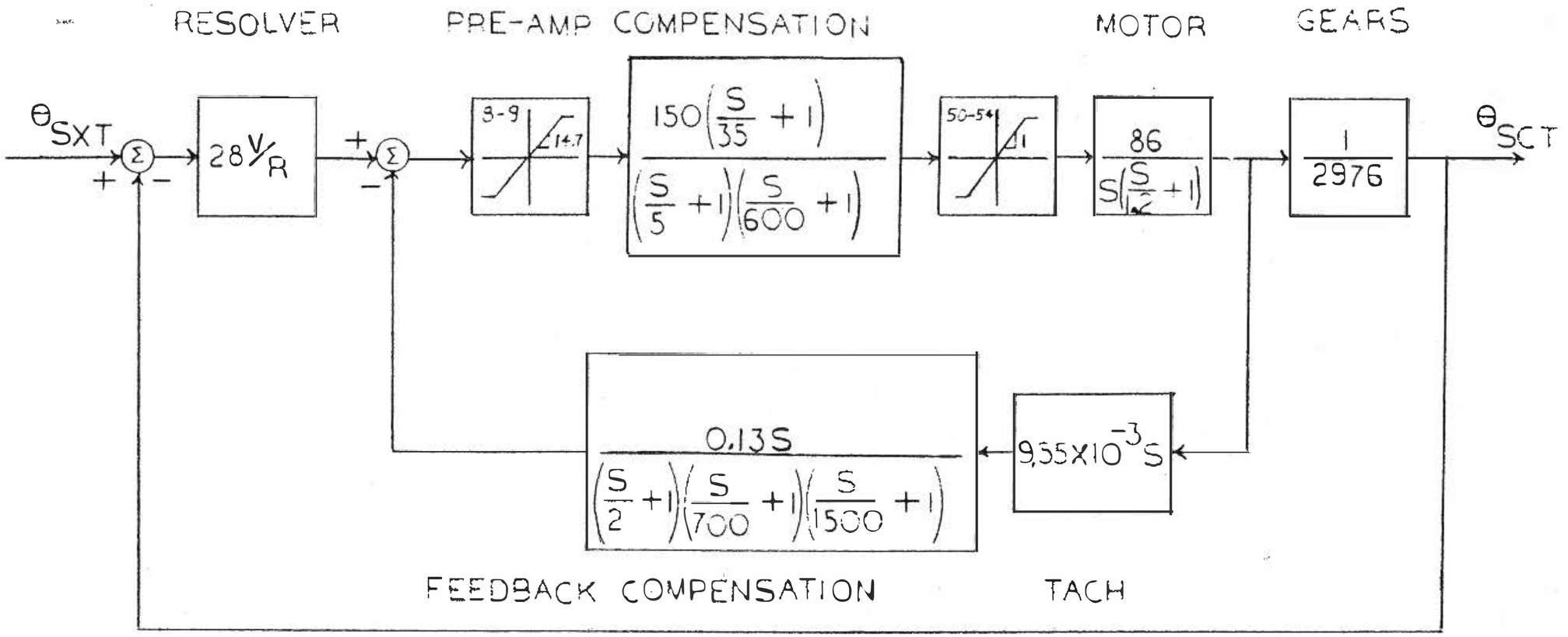

HW-56

IDEAL VERSION

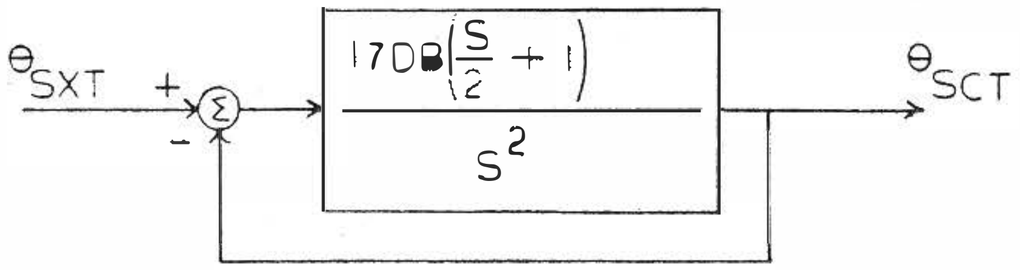

SCT SHAFT SERVO

OPTICS MOTOR DRIVE AMPLIFIER

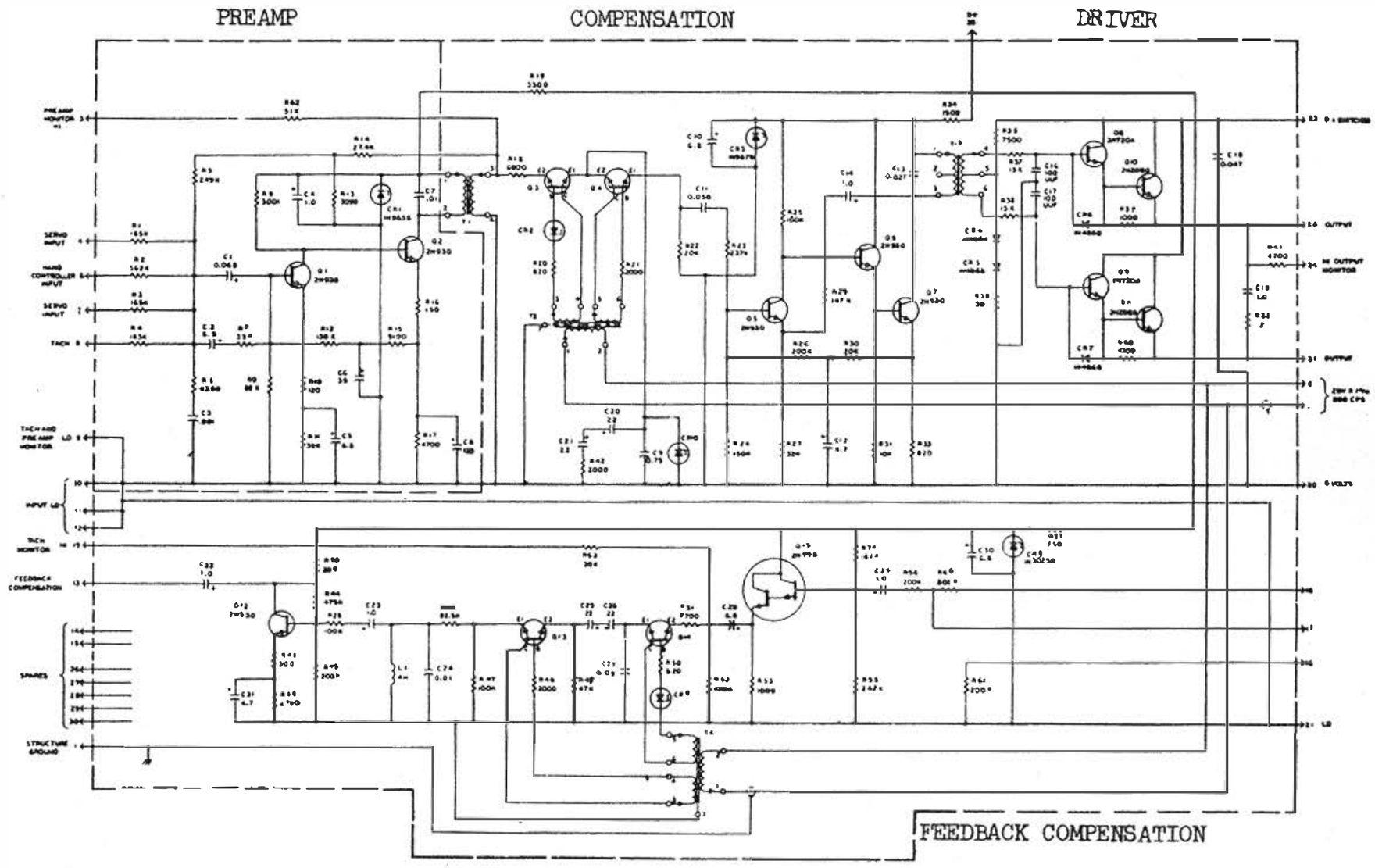

HW-57

OPTICS TWO SPEED SWITCH

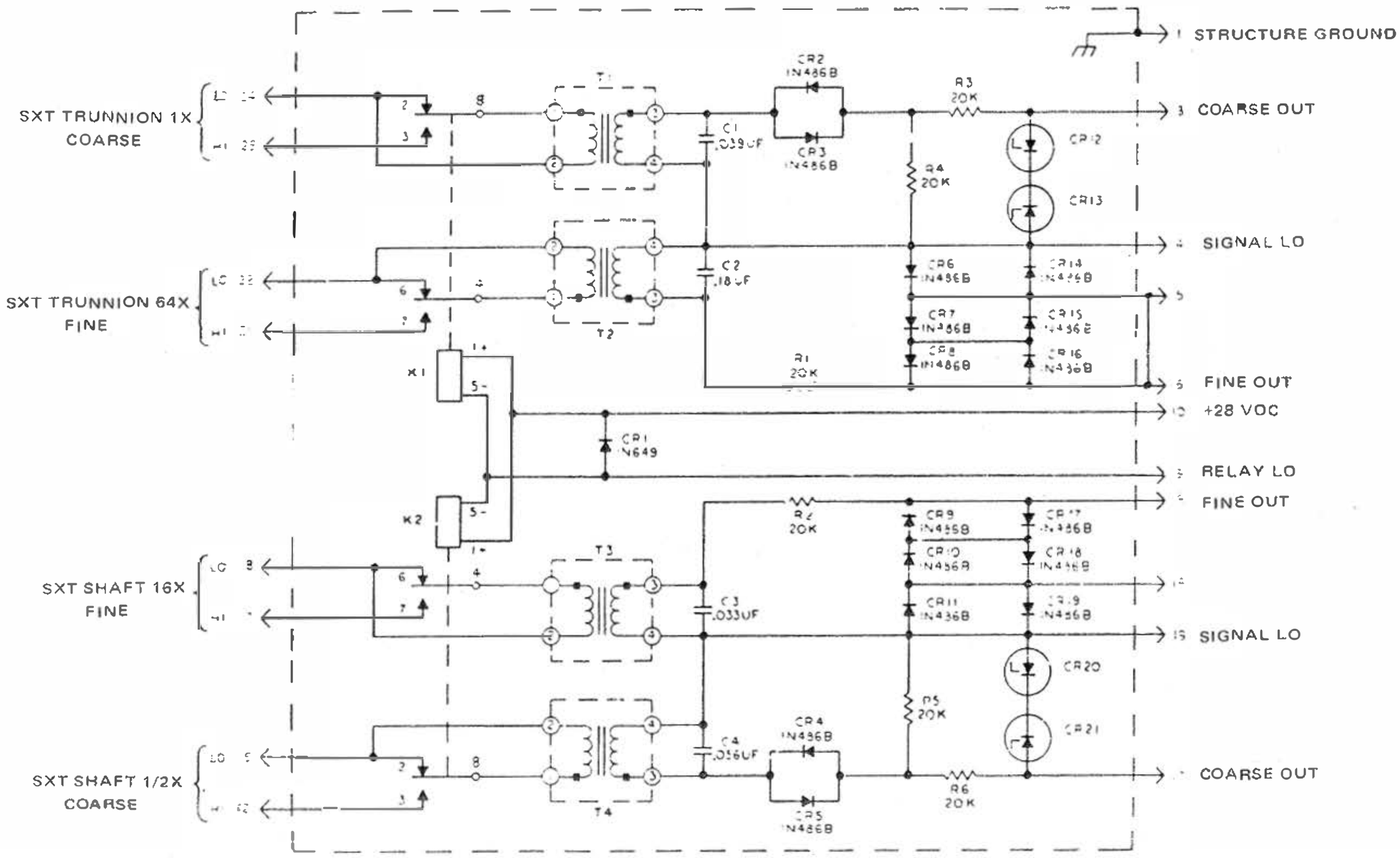

BLOCK II SERVO PARAMETERS

MOTOR SPEEDS VERSUS LOS RATES

LOS RATES		MOTOR SPEEDS			
		SXT		SCT	
TRUNNION	SHAFT	rpm	rad/sec	rpm	rad/sec
10.0 deg sec		9817	1028	4960	519
1.0 deg sec		982	103	496	51.9
0.1 deg/sec		98	10.3	49.6	5.2
25.0 sec/sec		6.8	0.71	3.4	0.36
	19.5 deg sec	9870	1024	9670	1013
	2.0 deg/sec	1003	105	992	104
	0.2 deg/sec	100	10.5	99	10.4
	50.0 sec/sec	7.0	0.73	6.9	0.72

SER C SENSITI ITY

	CALCULATION	SENSITIVITY
SXT TRUNNION		
Hand ntroller	$105 \frac{mr}{mv} \times \frac{205}{3.4} \times \frac{2}{11,780}$	$1.08 \frac{sec/sec}{mv}$
Tachometer	3.4×1.08	$3.68 \frac{sec/sec}{mv}$
SXT SHAFT		
Hand Controller	$105 \frac{mr}{mv} \times \frac{205}{3.4} \times \frac{1}{3010}$	$2.1 \frac{sec/sec}{mv}$
Tachometer	3.4×2.1	$7.14 \frac{sec/sec}{mv}$

MAXIMUM CREEP RATES DUE TO RESIDUALS

	MAXIMUM RESIDUAL	SERVO SENSITIVITY	THEORETICAL MAXIMUM RATE
SXT TRUNNION			
Hand Controller	3 mv rms PS 2014550	$1.08 \frac{sec/sec}{mv}$	3 sec/sec
Tachometer	15 mv rms PS 2016207	$3.70 \frac{sec/sec}{mv}$	55 sec/sec
SXT SHAFT			
Hand Controller	3 mv rms PS 2014550	$2.1 \frac{sec/sec}{mv}$	6 sec/sec
Tachometer	15 mv rms PS 2016207	$7.2 \frac{sec/sec}{mv}$	108 sec/sec

OPTICAL SUBSYSTEM PHASING (ROTATIONS DEFINED FACING SHAFT)

	Direct Mode		Resolved Mode*						
Integrator	Hand Cont. Position	Hand Cont. Position	Hand Cont. Position	Hand Cont. Position	MRA Input	Motor Rotation	Tach Output	Resolver Rotation	LOS Angle
SXT TRUNNION	DOWN	C Ø	UP	Tr Ø	O Ø	CCW	Tr Ø	CW	Decreasing
	UP	Tr Ø	DOWN	● Ø	Tr Ø	CW	O Ø	CCW	Increasing
SCT TRUNNION (slaved to SXT TRUNNION)	DOWN	O Ø	UP	Tr Ø	Tr Ø	CW	O Ø	CCW	Decreasing
	UP	Tr Ø	DOWN	O Ø	O Ø	CCW	Tr Ø	CW	Increasing
SXT SHAFT	Left	O Ø	Right	Tr Ø	O Ø	CCW	Tr Ø	CW	Decreasing
	Right	Tr Ø	Left	O Ø	Tr Ø	CW	O Ø	CW	Increasing
SCT SHAFT (slaved to SXT Shaft)	Left	O Ø	Right	Tr Ø	Tr Ø	CW	O Ø	CCW	Decreasing
	Right	Tr Ø	Left	O Ø	O Ø	CCW	Tr Ø	CW	Increasing

*1st quadrant only $\quad 0 < A_s < 90°$

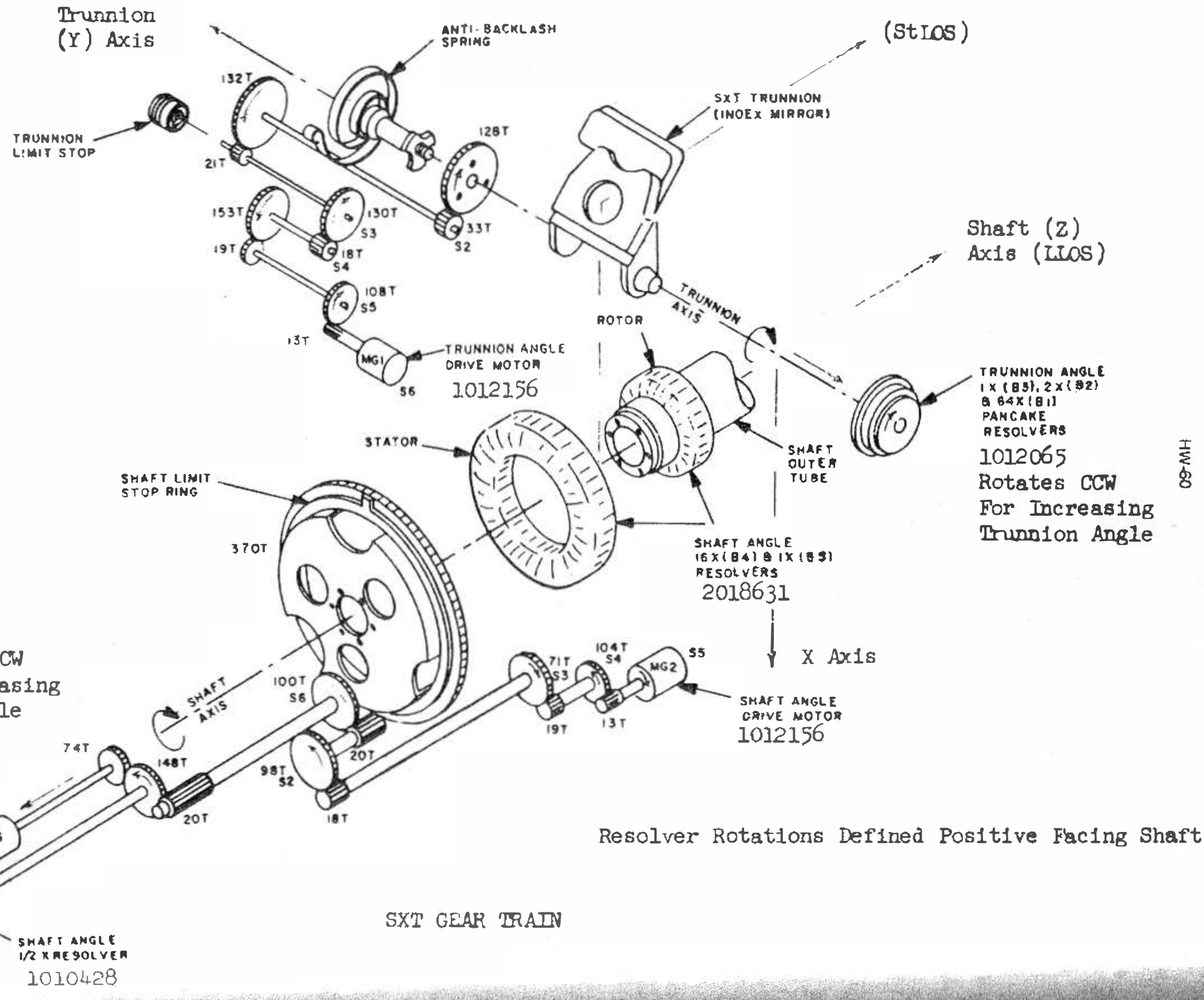

Resolver Rotations Defined Positive Facing Shaft

SXT GEAR TRAIN

HW-69

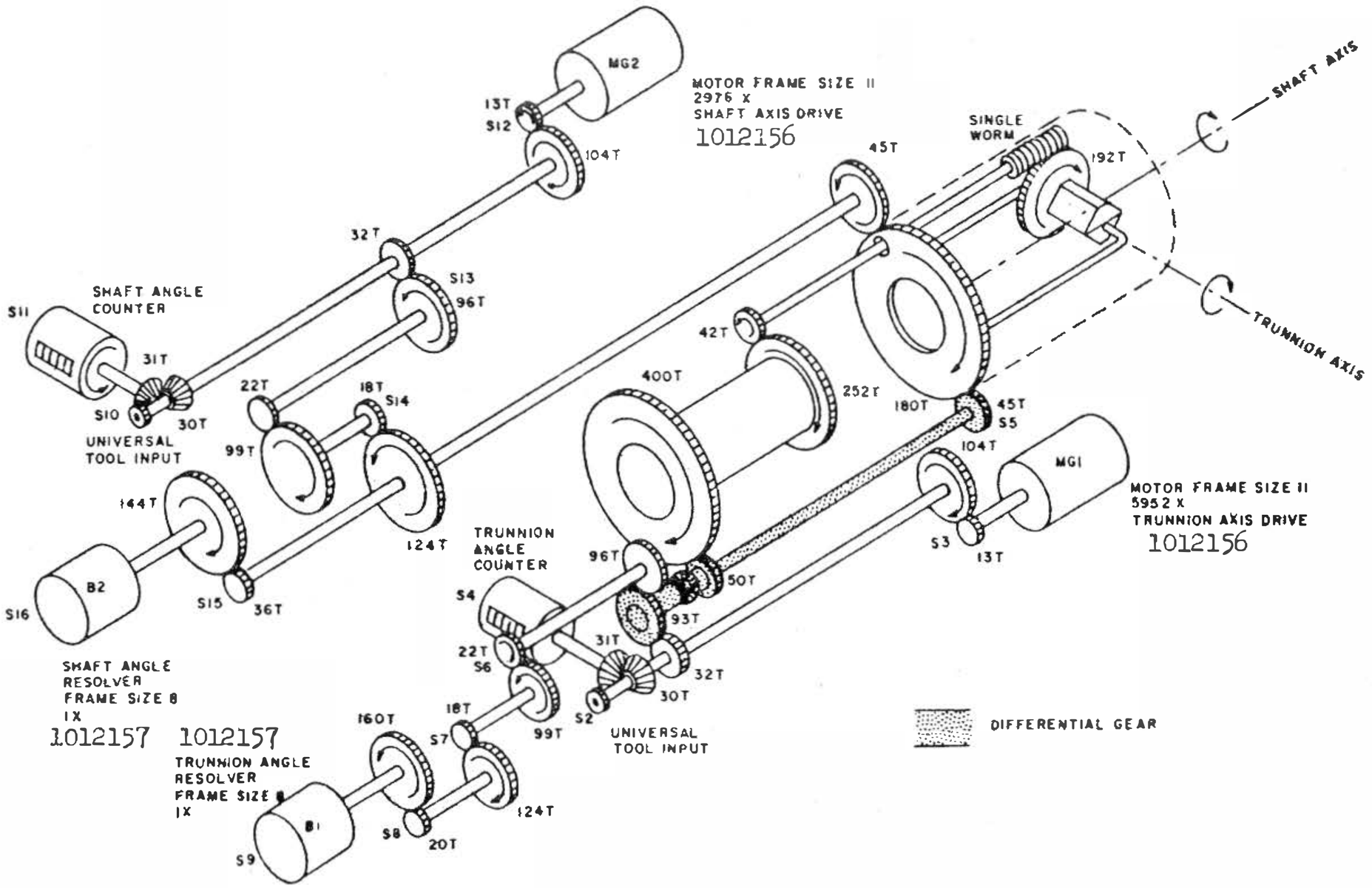

SCT GEAR TRAIN

HW-61

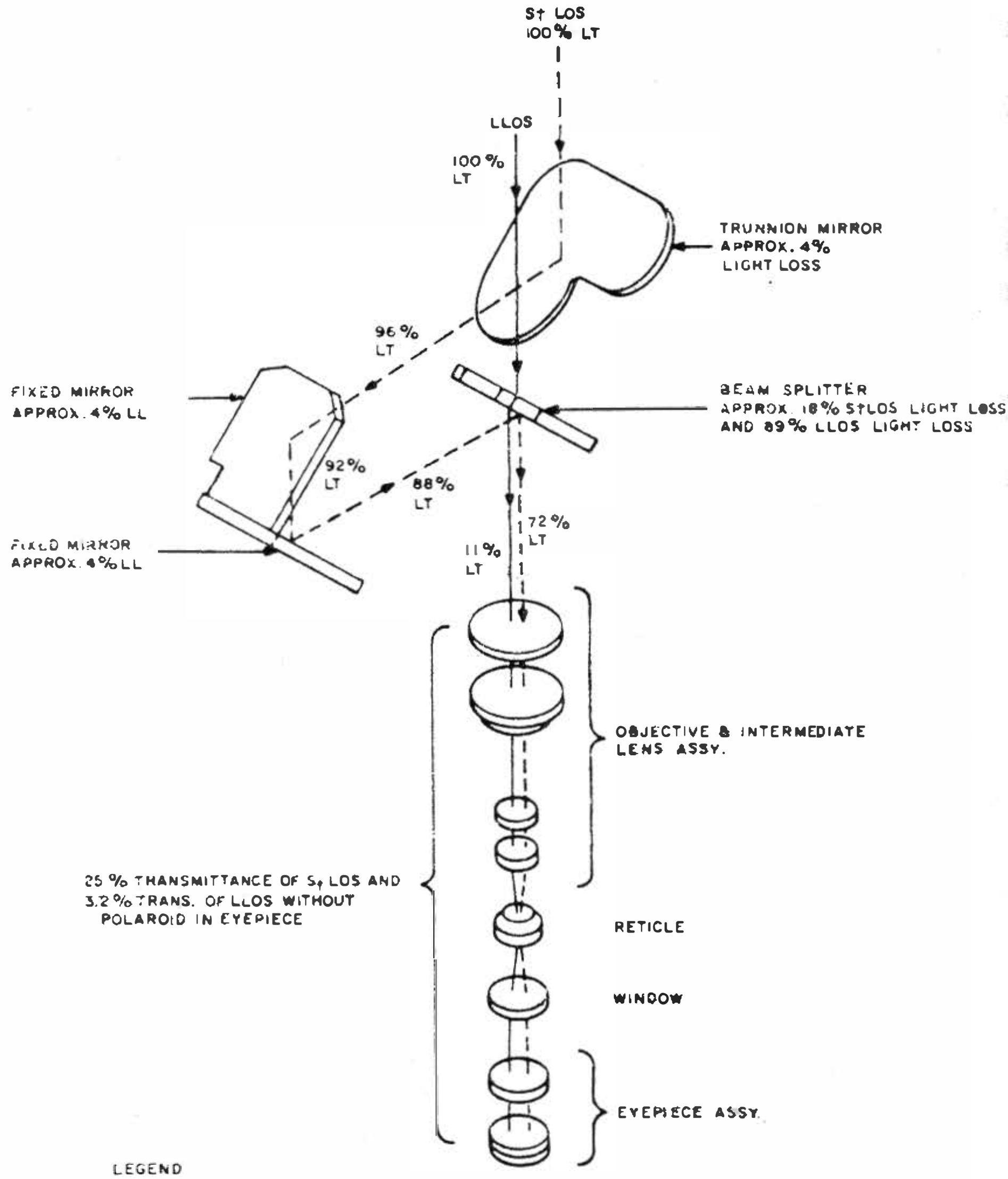

LEGEND

LT = LIGHT TRANSMITTANCE

LL = LIGHT LOSS

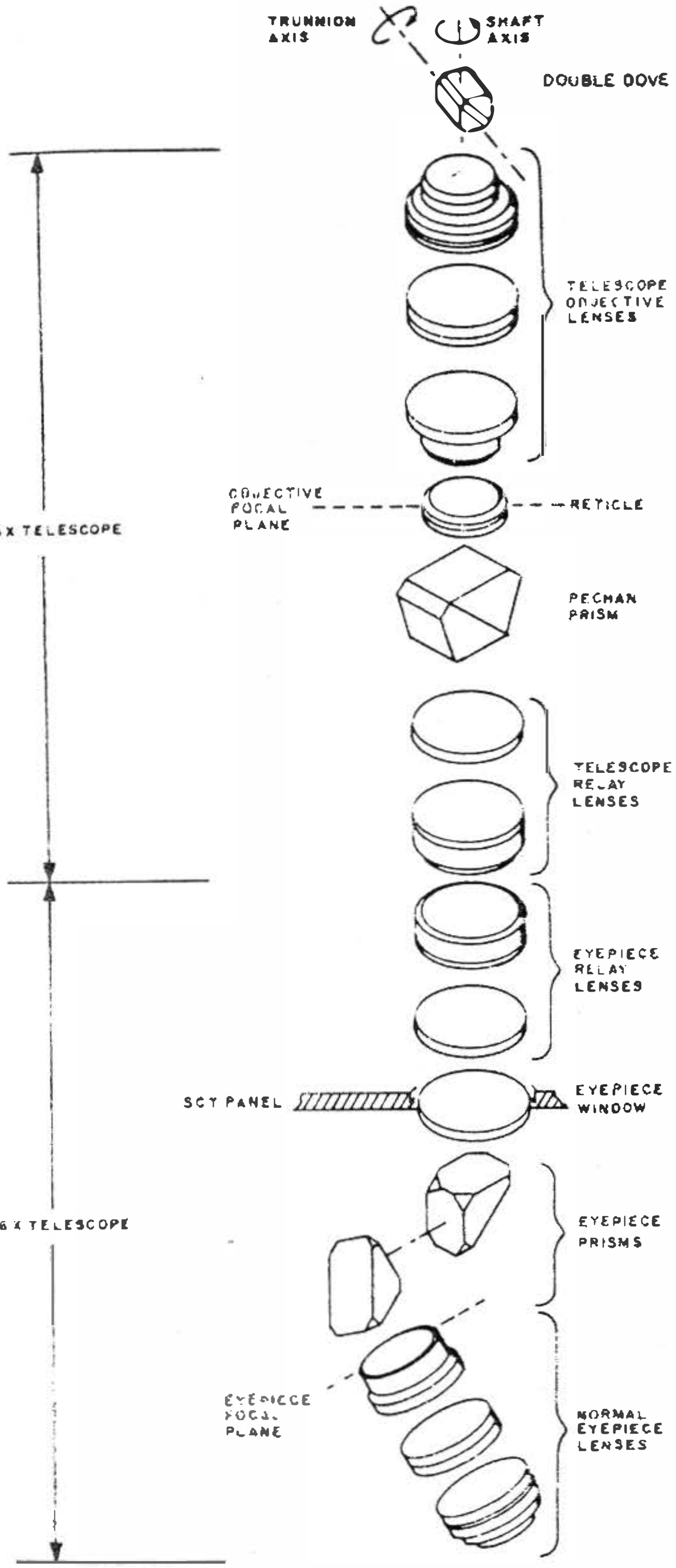
TRUNNION AXIS
SHAFT AXIS
DOUBLE DOVE PRISM
TELESCOPE OBJECTIVE LENSES
CONVECTIVE FOCAL PLANE
RETICLE
-4.6 X TELESCOPE
PECHAN PRISM
TELESCOPE RELAY LENSES
EYEPIECE RELAY LENSES
SCT PANEL
EYEPIECE WINDOW
+4.6 X TELESCOPE
EYEPIECE PRISMS
EYEPIECE FOCAL PLANE
NORMAL EYEPIECE LENSES
1X
LER EYEPIECE LENSES
f/2 λ
OPTIONAL LER EYEPIECE

SCT OPTICS

VERB LIST

13 LOAD ERROR NEEDLES
44 SET SURFACE FLAG
45 RESET SURFACE FLAG
47 LM SV INTO CSM SV
54 COAS MARKING
55 INCREMENT CMC TIME
56 TERMINATE P20
60 N17 = N20
67 W MATRIX DISPLAY
69 RESTART
74 ERASABLE DUMP
86 REJECT COAS MARK
88 TERMINATE VHF MARKS
94 RECYCLE ATT MNVR (P23)
96 TERM SV INTEG (CALL P00)

37 TIG TPI
38 STATE VECTOR TIME
39 △T TRANSFER
42 H.A - H.P - △.V
43 LAT - LO.NG - .H
44 H.A - H.P - TFF
49 △P.OS - △VE.L - CODE
51 HGA PIT.CH - HGA Y.AW
52 ACTUAL .WT
53 RAN.GE - R.R - P.HI
54 RAN.GE - R.R - THE.TA
55 CODE - ELEV A.NG - .WT
58 H.P - △VTP.I - △VTP.F
59 △VLOS.X - △VLOS.Y - △VLOS.Z
65 CMC TIME
73 H(X10) - VEL - GAM.MA

NOUN LIST

05 ANG E.RR
10 CHANNEL
11 TIG CSI
13 TIG CDH
14 V CUTOFF TLI.
15 INCREMENT ADDRESS
16 T EVENT (EXIT VERB)
24 △ CMC CLOCK TIME
32 TF HP
33 TIG
34 T EVENT (PROGRAM)
35 TF EVENT
36 CMC TIME

75 △H CD.H - △T1 - △T2
78 Y.AW - PIT.CH - OMICR.ON
79 .RATE - .DB
82 △VCDH LOCAL VER.T
85 VG CONTROL AXE.S
87 CALIB SHA.FT - T.RUN
89 .LAT - LON.G/2 - A.LT
90 Y A.CT-Y DOT AC.T-Y DOT PAS.S
91 PRESENT SHA.FT - T.RUN
92 COMMAND SHA.FT - T.RUN
93 TORQUING .ANG
94 SHA.FT - T.RUN
95 TFI/TFC - VG. - VI.
99 POS ERR. - VEL ER.R - CODE

NOUN 70 CODES

NOUN 70 CODES

R1: CELESTIAL BODY CODE 00000E

00	PLANET	27	ALKAID
01	ALPHERATZ	30	MENKENT
02	DIPHDA	31	ARCTURUS
03	NAVI	32	ALPHECCA
04	ACHERNAR	33	ANTARES
05	POLARIS	34	ATRIA
06	ACAMAR	35	RASALHAGUE
07	MENKAR	36	VEGA
10	MIRFAK	37	NUNKI
11	ALDEBARAN	40	ALTAIR
12	RIGEL		
13	CAPELLA		
14	CANOPUS		
15	SIRIUS		
16	PROCYON		
17	REGOR	41	DABIH
20	DNOCES	42	PEACOCK
21	ALPHARD	43	DENEB
22	REGULUS	44	ENIF
23	DENEBOLA	45	FOMALHAUT
24	GIENAH	46	SUN
25	ACRUX	47	EARTH
26	SPICA	50	MOON

P22 R2: LANDMARK DATA

LANDING SITE	10001
KNOWN SITE	10000
UNKNOWN SITE	20000

P23 R1: 00001E STAR ID

R2: 00000
- C=0 HORIZON
- C=1 EARTH LDMK
- C=2 LUNAR LDMK

R3: 00001D HORIZ ID
- C=1 EARTH, 2 LUNAR
- D=1 NEAR, 2 FAR

SG-MH

ALARM CODES (V05N09)

00110	MK REJECT ENTERED & IGNORED	00602	HP < 5.8 NM AFTER CDH	14777	ISS WARN-IMU,ICDU & PIPA FAIL
00113	NO INBITS (CH 16)	00603	CSI TIG TO CDH TIG ΔT < 10 MIN	20430	ORBITAL INTEGRATION STOPPED
00114	MORE MKS THAN DESIRED	00604	CDH TIG TO TPI TIG ΔT < 10 MIN	20607	NO CONIC SOLUTION
00115	V41N91 WITH OPTICS NOT IN CMC	00605	TOO MANY ITERATIONS	20610	ALTITUDE < 400K AT TIG (P37)
00116	OPTICS SW MOVED BEFORE 15 SEC	00606	CSI ΔV > 1000 LAST 2 ITERATIONS	21204	NEG OR ZERO WAITLIST CALL
00117	V41N91 BUT OPTICS NOT READY	00611	NO TIG FOR ELEV ANGLE GIVEN	21206	TWO DISPLAYS ATTEMPTED AT ONCE
00120	ZERO OPTICS FIRST	00612	WRONG SPHERE OF INFL AT TIG	21210	TWO PROGRAMS USING AT ONCE
00121	CDUS BAD DURING MK-REPEAT	00613	REENTRY ANGLE OUT OF LIMITS	21302	SQRT CALLED WITH NEG ARGUMENT
00205	PIPA SATURATED	00777	ISS WARNING-PIPA FAIL	21501	DSKY ALARM DURING INTERNAL USE
00206	CANNOT ZERO ICDU-WITH ALARMS	01102	CMC SELF TEST ERROR	21502	ILLEGAL FLASHING DISPLAY
00207	NEED 90 SEC FOR ISS TURN ON	01105	DOWNLINK TOO FAST	21521	KEYED PRO AFTER LIFTOFF
00210	IMU NOT OPERATING	01106	UPLINK TOO FAST	31104	DELAY ROUTINE IS BUSY
00211	COARSE ALIGN ERROR > 2 DEG	01107	PHASE TABLE FAIL-ERASABLE BAD	31201	EXEC OVERFLOW-NO VAC AREAS
00212	PIPA FAIL BUT PIPA NOT IN USE	01301	ARCSIN/ARCCOS INPUT > ONE	31202	EXEC OVERFLOW-NO CORE SETS
00213	IMU NOT ON-TURN ON IMU	01407	VG INCREASING	31203	WAITLIST OVERFLOW-MANY TASKS
00214	PROGRAM USING IMU BUT IMU OFF	01426	IMU UNSATISFACTORY	31211	CANNOT INTERRUPT EXTENDED VERB
00217	COARSE ALIGN/TORQUING PROBLEM	01427	IMU POLARITY REVERSED		
00220	IMU NOT ALIGNED/NO REFSMMAT	01520	V37 NOT PERMITTED NOW		
00401	DESIRED MGA TOO LARGE	01600	OVERFLOW DURING DRIFT TEST		
00402	DO SECOND MINKEY PULSE TORQUE	01601	BAD IMU TORQUE		
00404 *	TGT OUT OF VIEW (TRUN > 90 DEG)	01703	INSUF TIME TO INTEG-TIG SLIP		
00405	STAR PAIR NOT AVAILABLE	03777	ISS WARNING-ICDU FAIL		
00406	P20 NOT OPERATING	04777	ISS WARNING-ICDU & PIPA FAIL		
00421	W MATRIX OVERFLOW	07777	ISS WARNING-IMU FAIL		
00600	NO SOLUTION ON 1ST ITERATION	10777	ISS WARNING-IMU & PIPA FAIL		
00601	HP < 5.8 NM AFTER CSI	13777	ISS WARNING-IMU & ICDU FAIL		

NOTE :

00404 * IS A PRIORITY ALARM
2XXXX POODOO - NO RESTART LT - F37 (AVE G ON OR EXT VERB - ACTS AS BAILOUT)
3XXXX BAILOUT - NO RESTART LT - PROGRAM CONTINUES

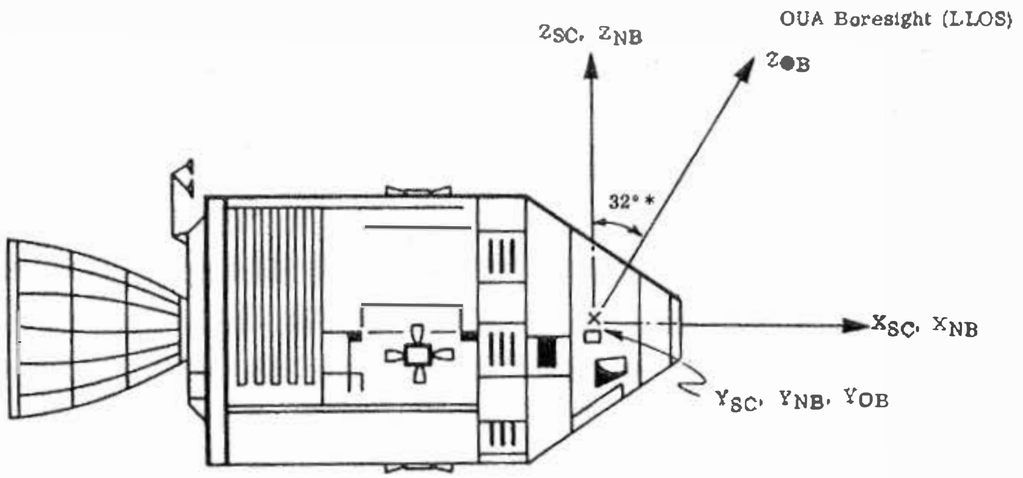

$$\begin{bmatrix} X \\ Y \\ Z \end{bmatrix}_{SM} = \begin{bmatrix} \cos AI & 0 & \sin AI \\ 0 & 1 & 0 \\ -\sin AI & 0 & \cos AI \end{bmatrix} \begin{bmatrix} \cos AM & -\sin AM & 0 \\ \sin AM & \cos AM & 0 \\ 0 & 0 & 1 \end{bmatrix} \begin{bmatrix} 1 & 0 & 0 \\ 0 & \cos AO & -\sin AO \\ 0 & \sin AO & \cos AO \end{bmatrix} \begin{bmatrix} \cos 32^* & 0 & \sin 32^* \\ 0 & 1 & 0 \\ -\sin 32^* & 0 & \cos 32^* \end{bmatrix} \begin{bmatrix} \cos AS & -\sin AS & 0 \\ \sin AS & \cos AS & 0 \\ 0 & 0 & 1 \end{bmatrix} \begin{bmatrix} \cos AT & 0 & \sin AT \\ 0 & 1 & 0 \\ -\sin AT & 0 & \cos AT \end{bmatrix} \begin{bmatrix} 0 \\ 0 \\ St\ LOS \end{bmatrix}$$

* Nominal Angle 32° 31' 23"

$$\begin{bmatrix} X \\ Y \\ Z \end{bmatrix}_{SM} = \begin{bmatrix} \cos AI & 0 & \sin AI \\ 0 & 1 & 0 \\ -\sin AI & 0 & \cos AI \end{bmatrix} \begin{bmatrix} \cos AM & -\sin AM & 0 \\ \sin AM & \cos AM & 0 \\ 0 & 0 & 1 \end{bmatrix} \begin{bmatrix} 1 & 0 & 0 \\ 0 & \cos AO & -\sin AO \\ 0 & \sin AO & \cos AO \end{bmatrix} \begin{bmatrix} \cos 32^* & 0 & \sin 32^* \\ 0 & 1 & 0 \\ -\sin 32^* & 0 & \cos 32^* \end{bmatrix} \begin{bmatrix} \cos AS & \sin AT \\ \sin AS & \sin AT \\ \cos AT & \end{bmatrix}$$

where

AI, AM and AO are the inner, middle, and outer gimbal angles as indicated by the CMC

AS and AT are the SXT LOS shaft and trunnion angles

DRIVE RATES

	TRUNNION	SHAFT
HI	10.0 DEG/S	19.5 DEG/S
MED	1.0 DEG/S	2.0DEG/S
LO	0.1 DEG/S	0.2 DEG/S
MIN	25 SEC/S	50 SEC/S
CMC	3.8 DEG/S	15.1 DEG/S

RETICLE ROTATION WITH OPTICS HAND CONTROLLER FULL RIGHT (MANUAL DIRECT MODE)

SXT FIELD OF VIEW

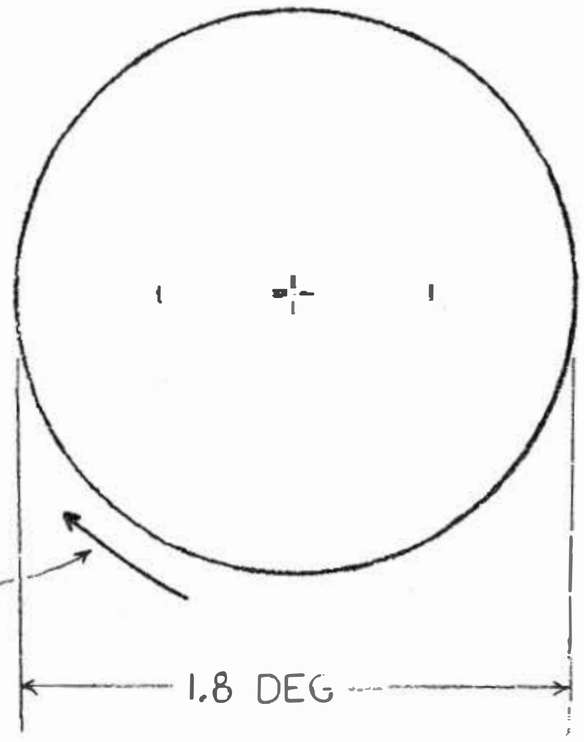

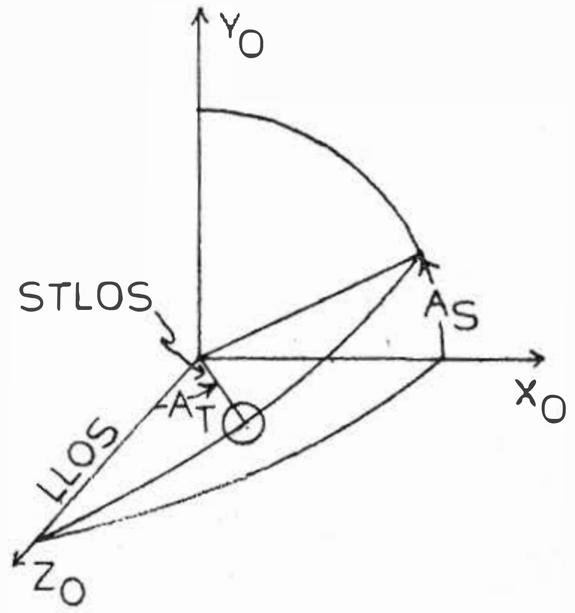

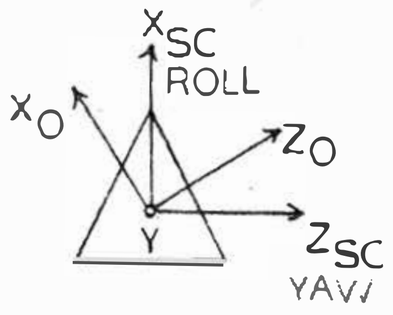

SXT LOS MECHANICAL LIMITS

TRUNNION 0(0,-10) TO 90(10,0) DEG

SHAFT 270(0,-10) TO -270(-10,0) DEG

89-MH

SXT VACUUM RETICLE

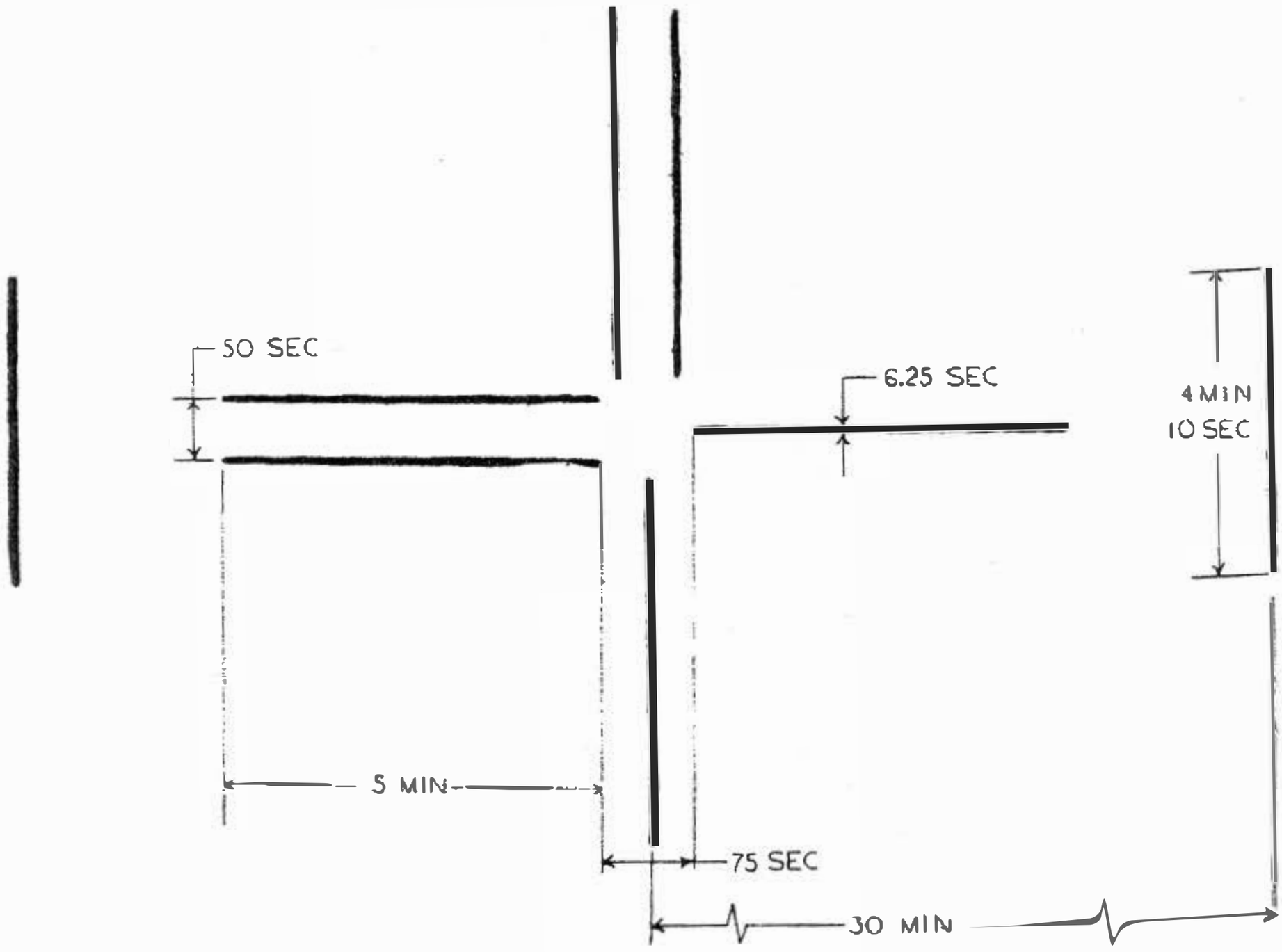

SCT RETICLE

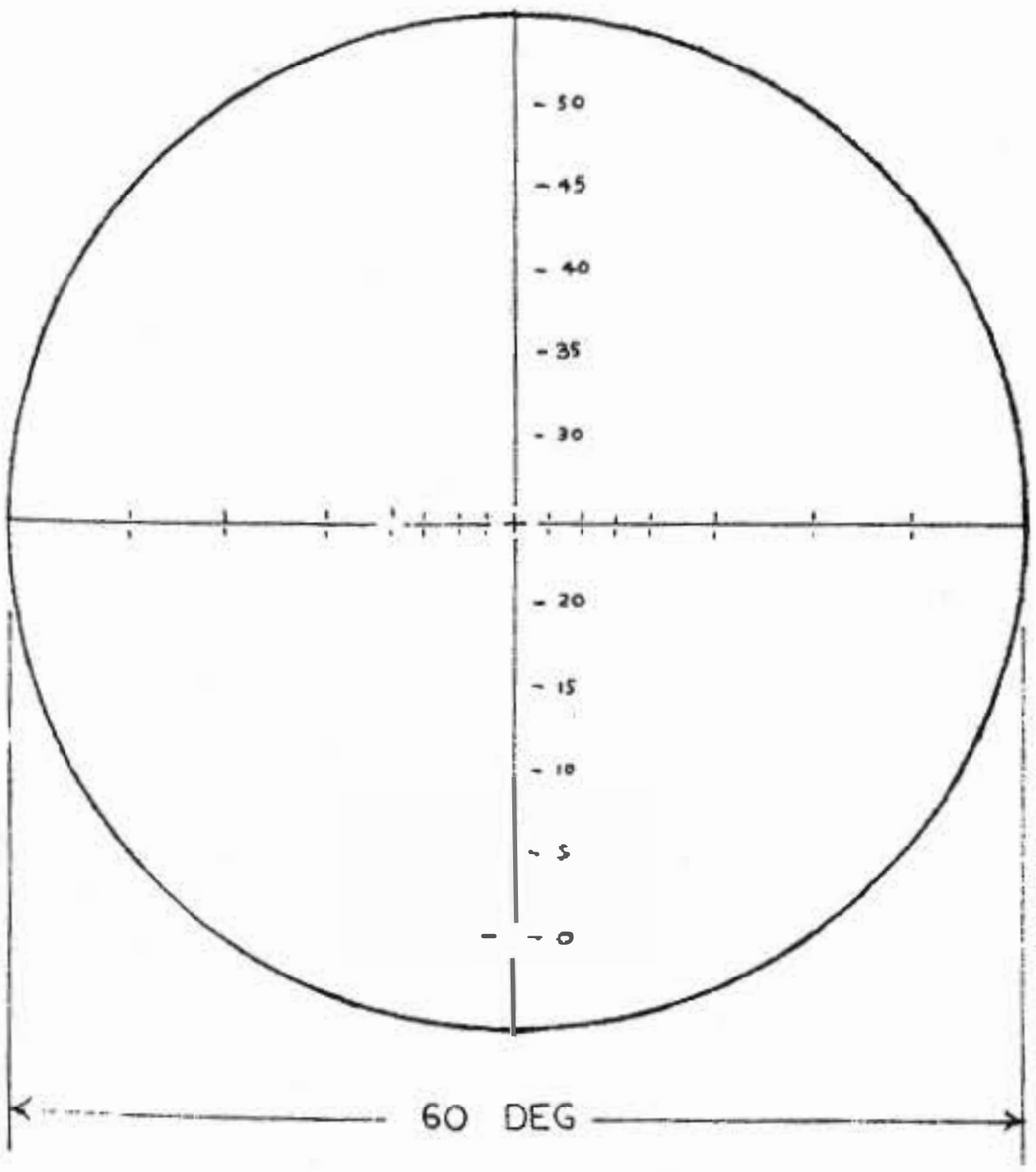

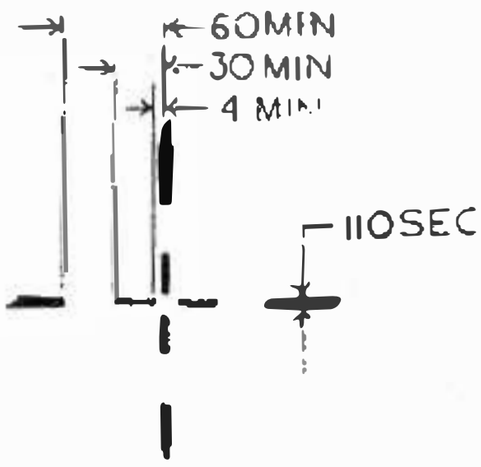

RETICLE CENTER

ALIGNMENT OPTICAL TELESCOPE

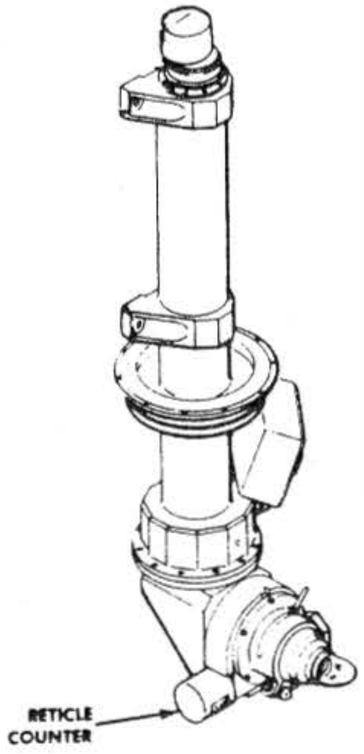

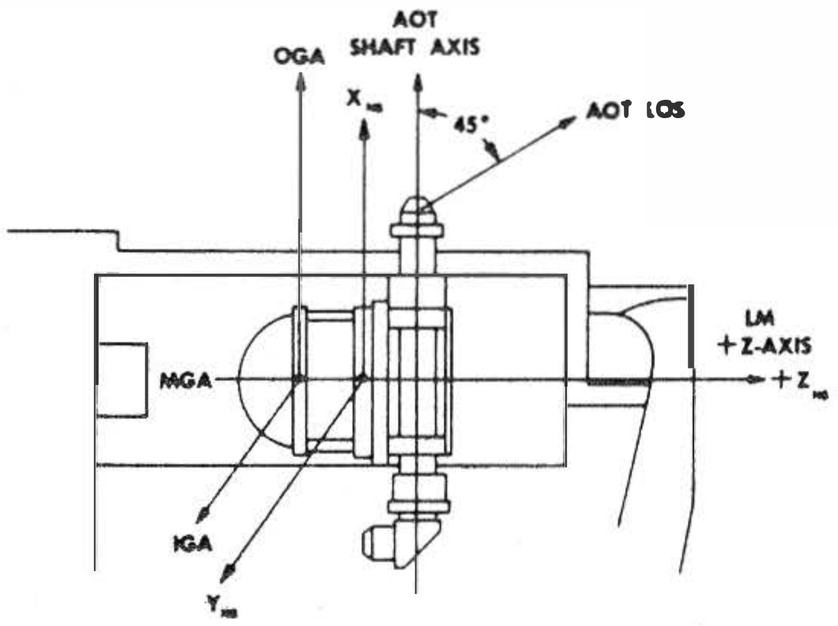

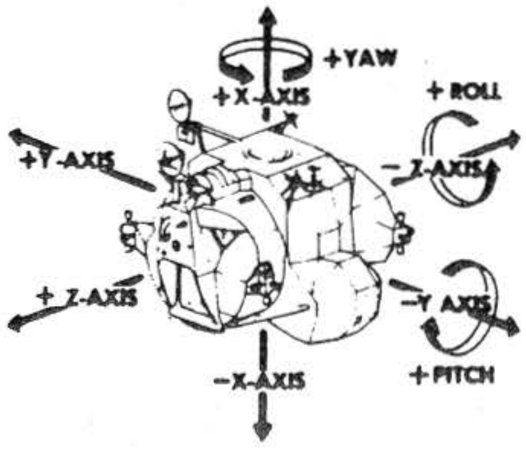

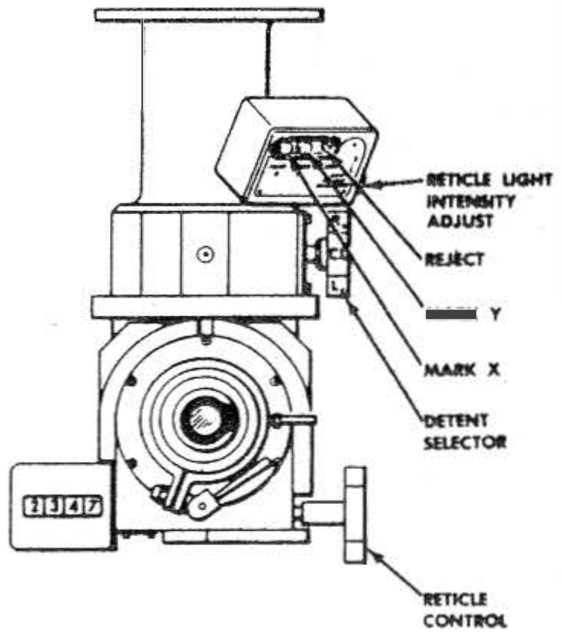

AOT LINE OF SIGHT TO IMU STABLE MEMBER TRANSFORMATIONS

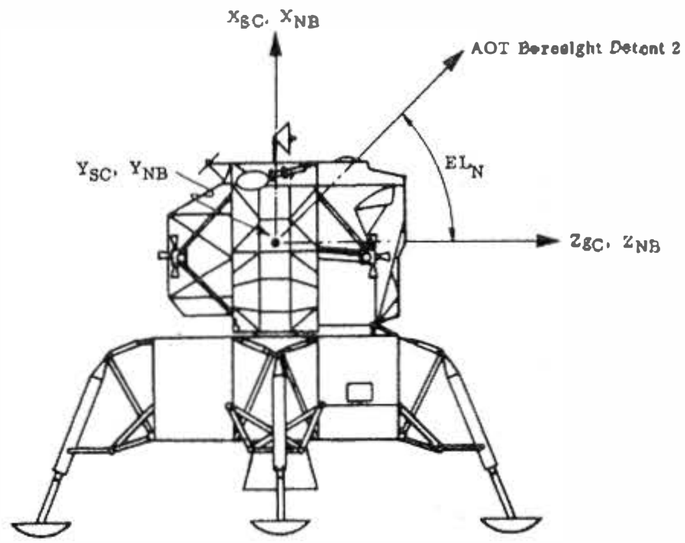

Orbital Alignment

$$\begin{bmatrix} X \\ Y \\ Z \end{bmatrix}_{SM} = \begin{bmatrix} \cos AI & 0 & \sin AI \\ 0 & 1 & 0 \\ -\sin AI & 0 & \cos AI \end{bmatrix} \begin{bmatrix} \cos AM & -\sin AM & 0 \\ \sin AM & \cos AM & 0 \\ 0 & 0 & 1 \end{bmatrix} \begin{bmatrix} 1 & 0 & 0 \\ 0 & \cos AO & -\sin AO \\ 0 & \sin AO & \cos AO \end{bmatrix} \begin{bmatrix} 1 & 0 & 0 \\ 0 & \cos AZ_N & \sin AZ_N \\ 0 & -\sin AZ_N & \cos AZ_N \end{bmatrix} \begin{bmatrix} \cos EL_N & 0 & \sin EL_N \\ 0 & 1 & 0 \\ -\sin EL_N & 0 & \cos EL_N \end{bmatrix} \begin{bmatrix} \cos R_N & -\sin R_N & 0 \\ \sin R_N & \cos R_N & 0 \\ 0 & 0 & 1 \end{bmatrix} \begin{bmatrix} X_{\text{Reticle Plane}} \\ Y_{\text{Reticle Plane}} \\ \text{LOS} \end{bmatrix}$$

N = Detent Position

$R_N = AZ_2 - AZ_N$

(Note: R_N is a correction for the apparent rotation of the star field about the optical axis when the AOT is moved to different detent positions.)

Lunar Surface Alignment

$$\begin{bmatrix} X \\ Y \\ Z \end{bmatrix}_{SM} = \begin{bmatrix} \cos AI & 0 & \sin AI \\ 0 & 1 & 0 \\ -\sin AI & 0 & \cos AI \end{bmatrix} \begin{bmatrix} \cos AM & -\sin AM & 0 \\ \sin AM & \cos AM & 0 \\ 0 & 0 & 1 \end{bmatrix} \begin{bmatrix} 1 & 0 & 0 \\ 0 & \cos AO & -\sin AO \\ 0 & \sin AO & \cos AO \end{bmatrix} \begin{bmatrix} 1 & 0 & 0 \\ 0 & \cos AZ_N & \sin AZ_N \\ 0 & -\sin AZ_N & \cos AZ_N \end{bmatrix} \begin{bmatrix} \cos EL_N & 0 & \sin EL_N \\ 0 & 1 & 0 \\ -\sin EL_N & 0 & \cos EL_N \end{bmatrix} \begin{bmatrix} \cos R_N & -\sin R_N & 0 \\ \sin R_N & \cos R_N & 0 \\ 0 & 0 & 1 \end{bmatrix} \begin{bmatrix} \cos AS & -\sin AS & 0 \\ \sin AS & \cos AS & 0 \\ 0 & 0 & 1 \end{bmatrix} \begin{bmatrix} \cos AT & 0 & \sin AT \\ 0 & 1 & 0 \\ -\sin AT & 0 & \cos AT \end{bmatrix} \begin{bmatrix} 0 \\ 0 \\ \text{LOS} \end{bmatrix}$$

where

AI, AM, and AO are the inner, middle, and outer gimbal angles as indicated by the LGC

AZ_N and EL_N are the AOT azimuth and elevation angles at the Nth detent.

$EL_N = 45°$, N = 1, 2,---, 6; $AZ_1 = -60°$; $AZ_2 = 0°$; $AZ_3 = 60°$; $AZ_4 = 120°$; $AZ_5 = 180°$; $AZ_6 = -120°$

AS = Y Reticle Angle

$$AT = \frac{360 + S \text{ Reticle Angle} - Y \text{ Reticle Angle}}{12}$$

AOT STAR MEASUREMENT

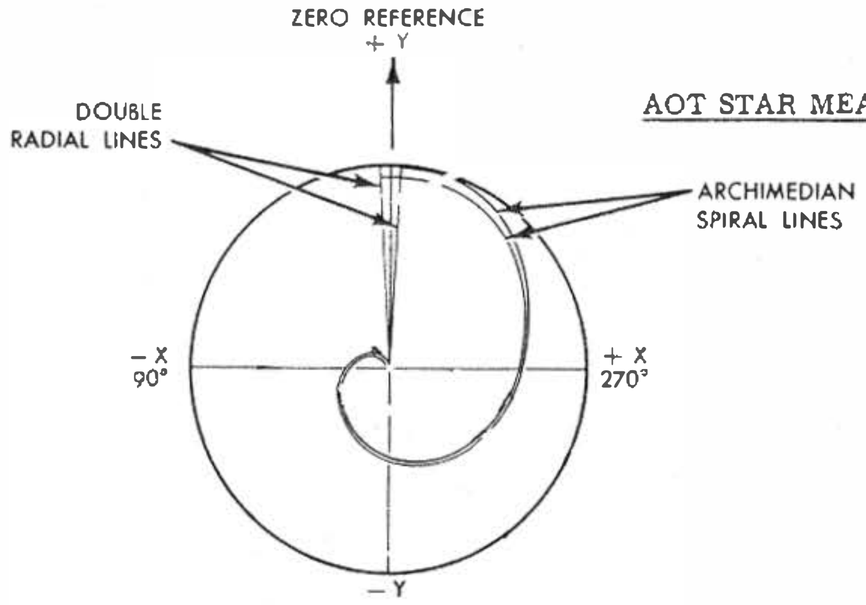

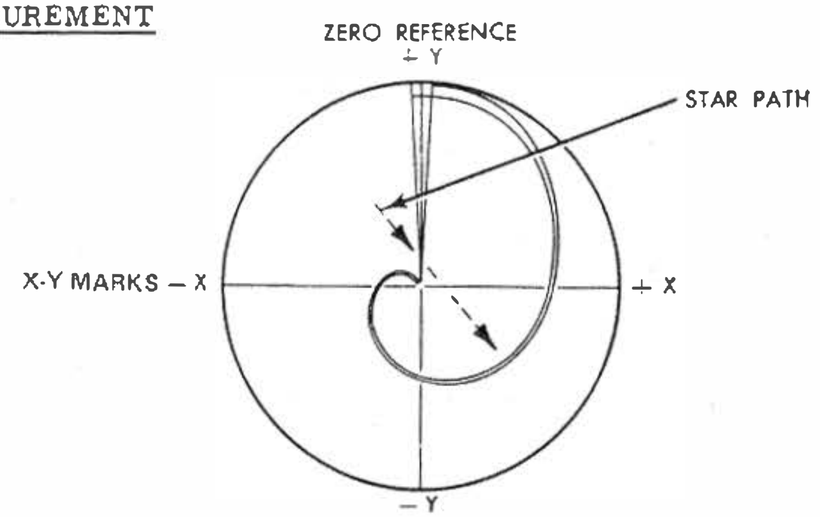

HW-72

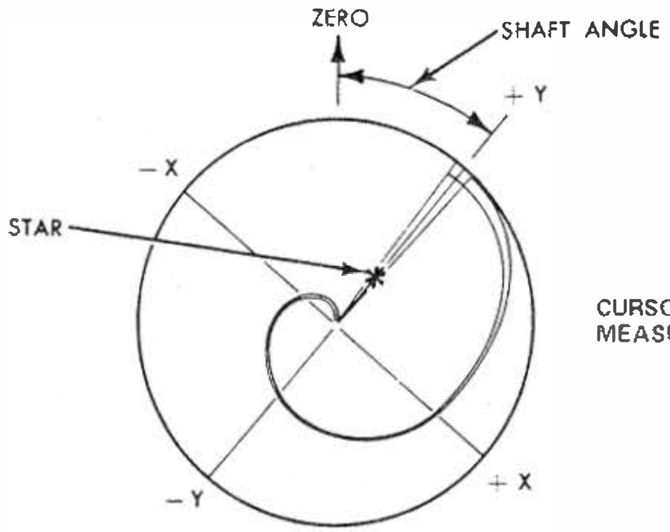

CURSOR SPIRAL
MEASUREMENTS

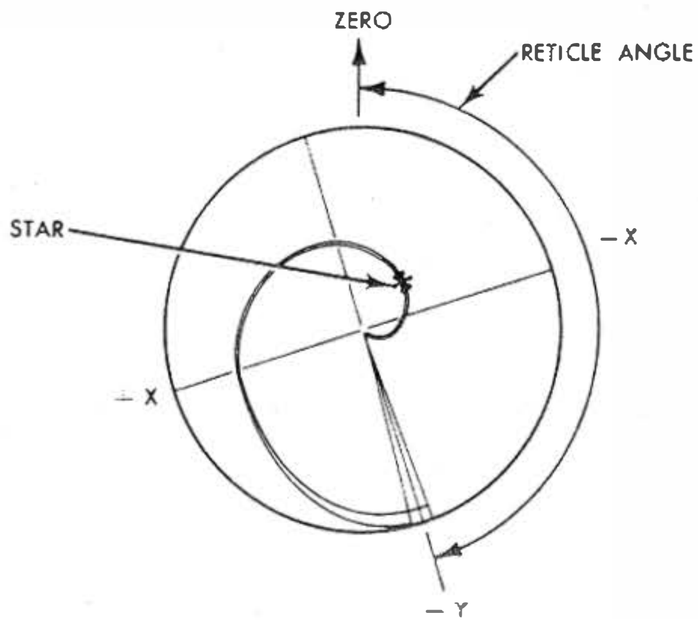

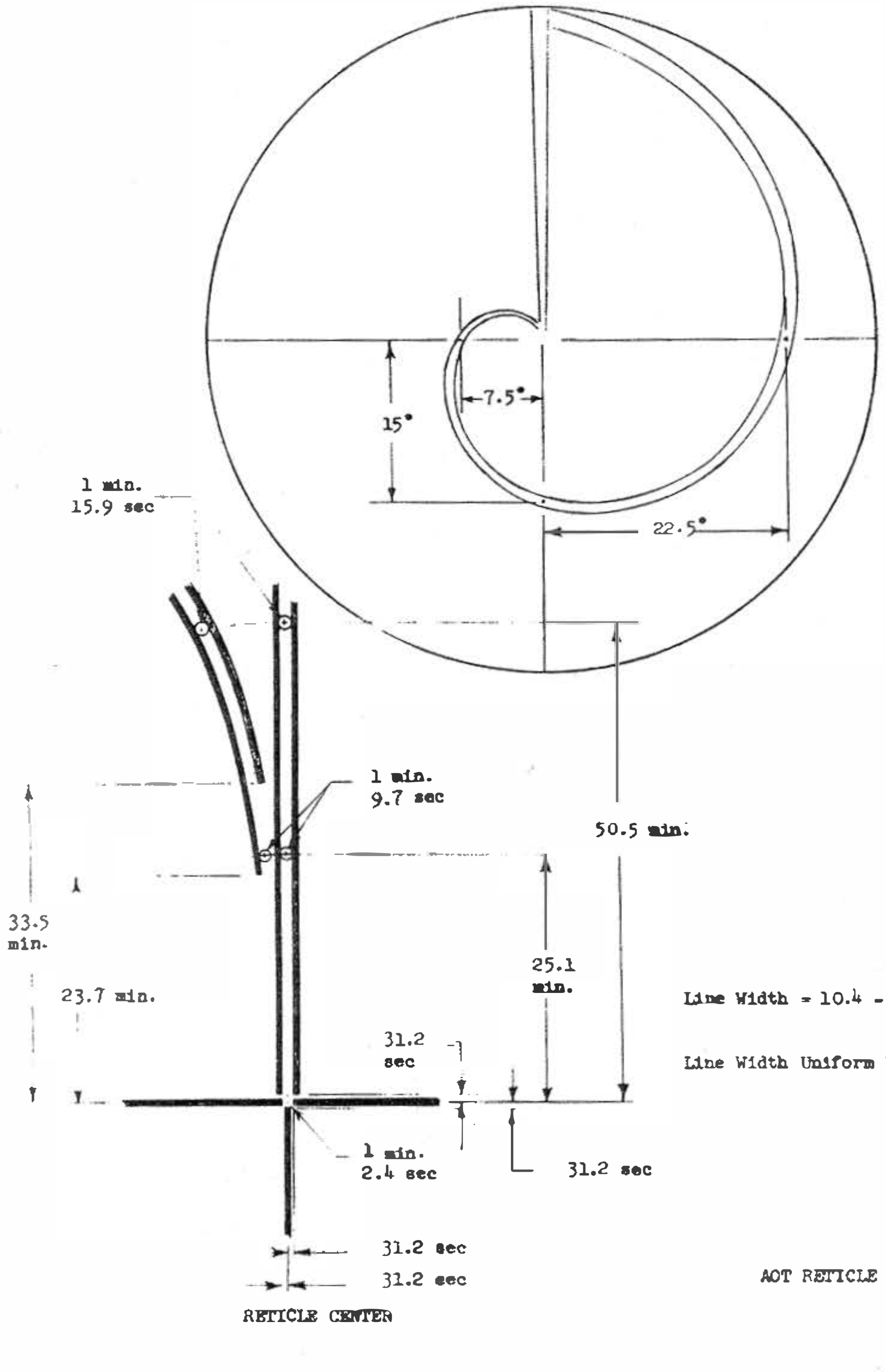

Line Width = 10.4 - 52 sec

Line Width Uniform Within 20.8 sec

AOT RETICLE

TYPICAL IMU TEMPERATURE

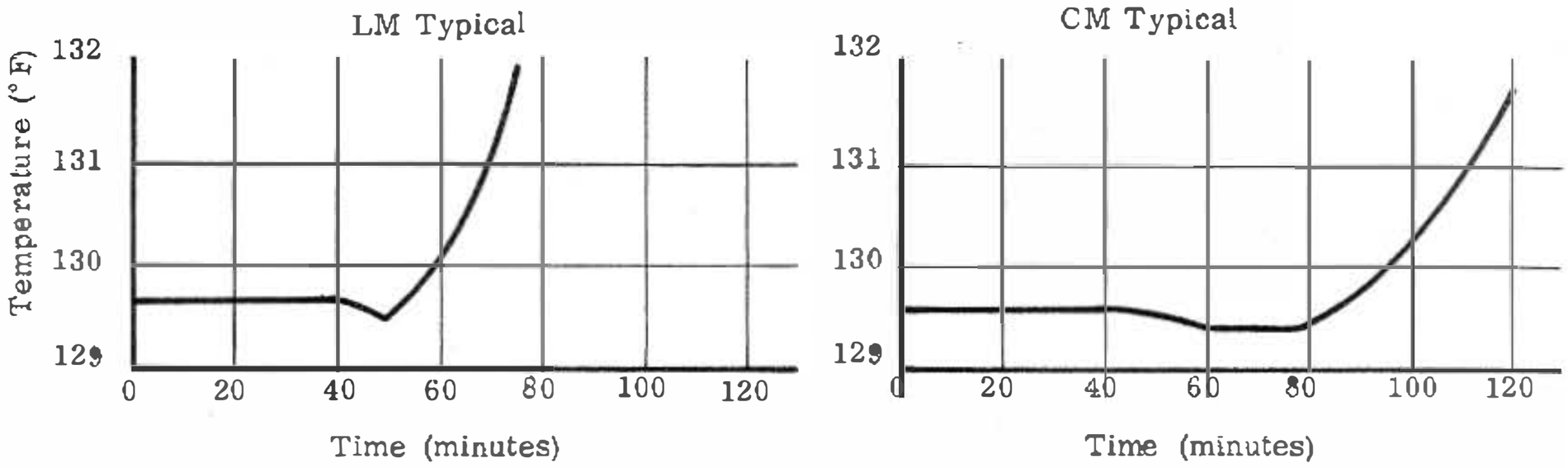

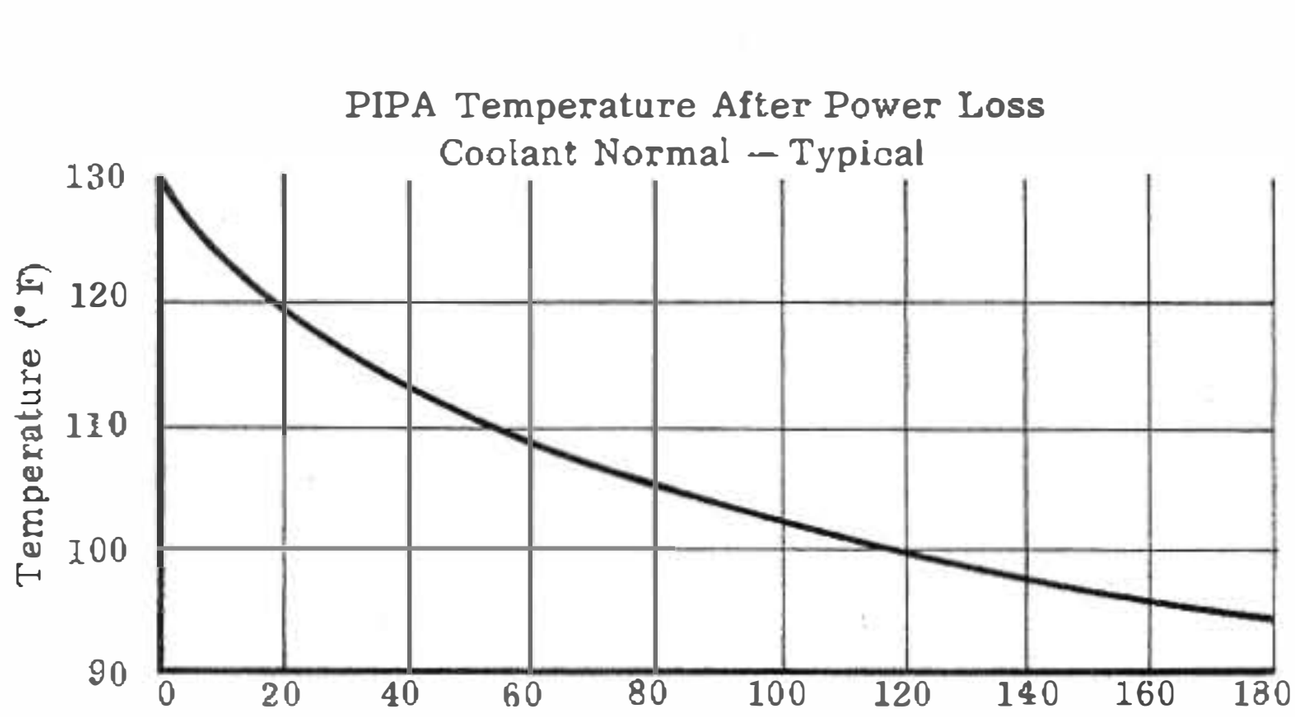

NOMINAL PARAMETERS

- PIPA Temperature — 130 ± 1.5°F
- Low Temperature Alarm — 126 ± 2.5°F (PIPA Temperature)
- High Temperature Alarm — 135 ± 2.5°F (PIPA Temperature)
- Safety Thermostat Opens — $140\ ^{+5}_{-2}$ °F (PIPA Temperature)
- Safety Thermostat Hysteresis — 2 - 5°F

TYPICAL HEADER TEMPERATURES AFTER COOLANT LOSS

CM

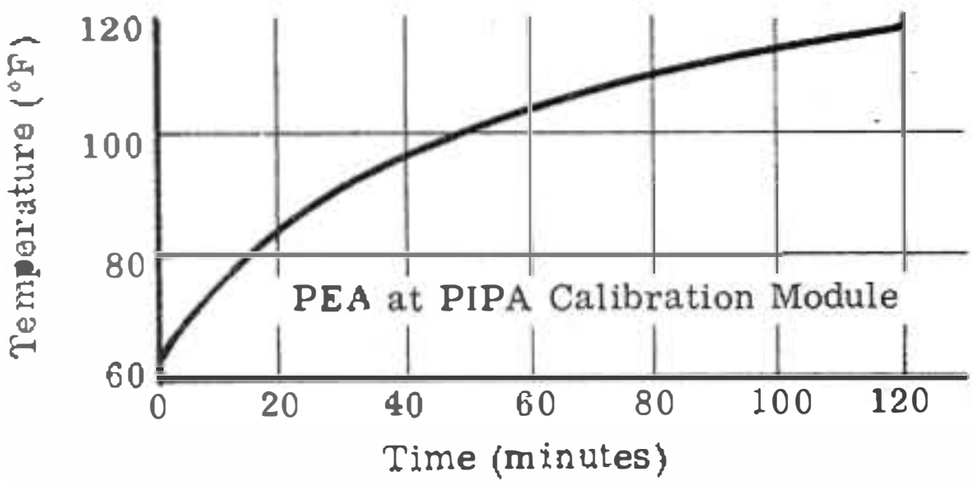

LM

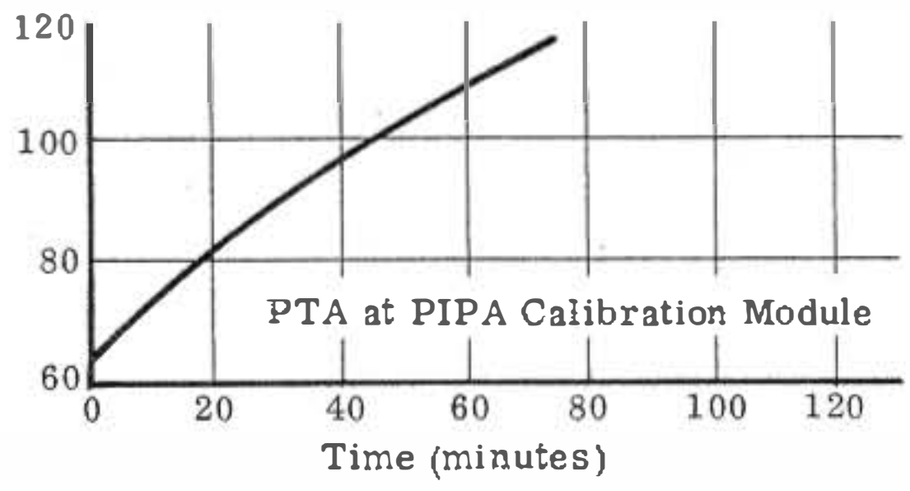

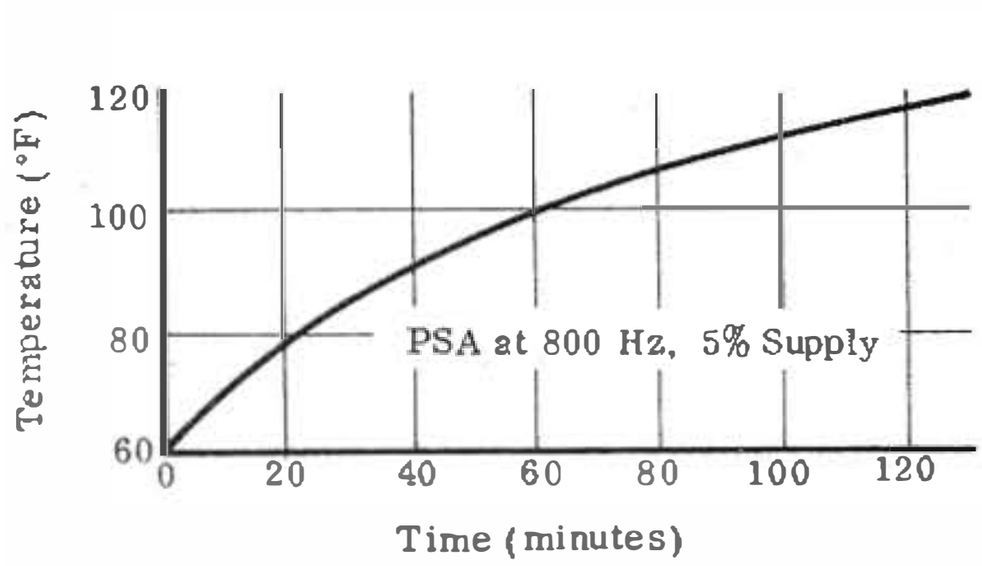

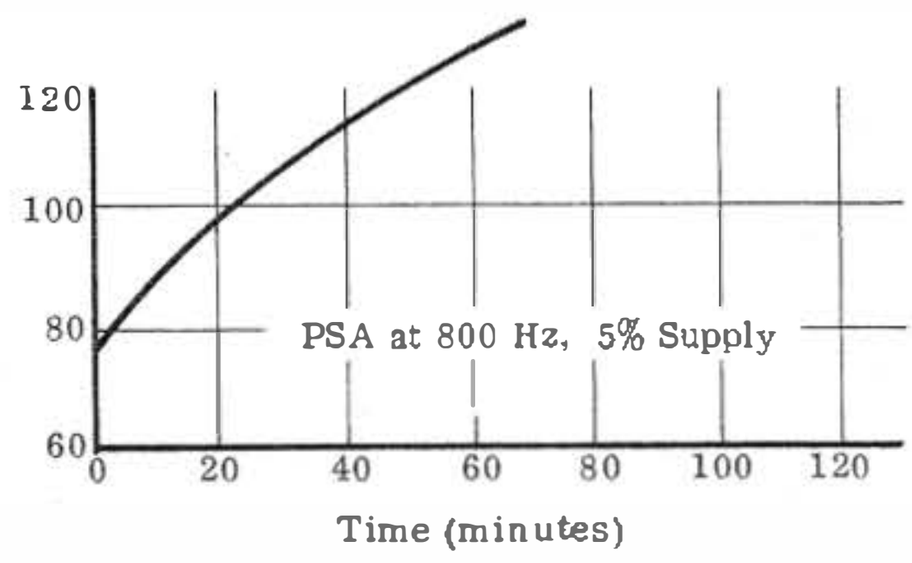

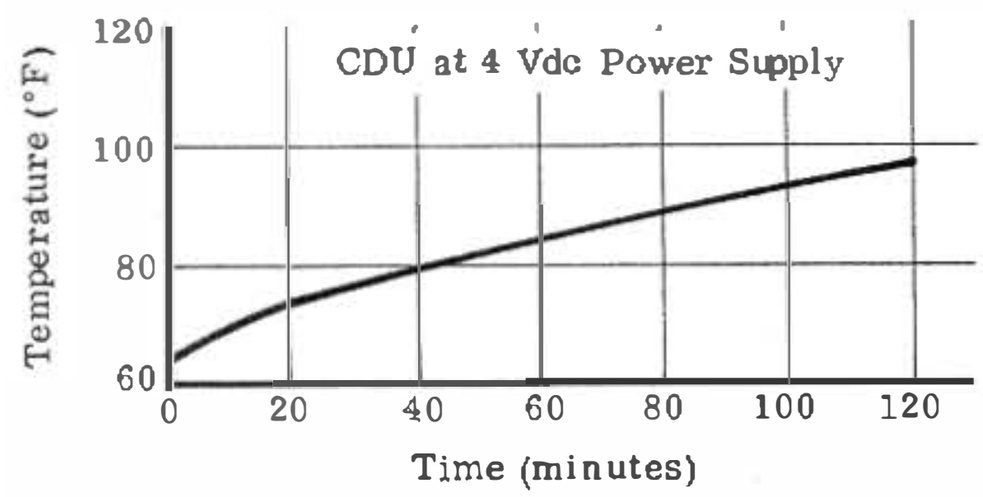

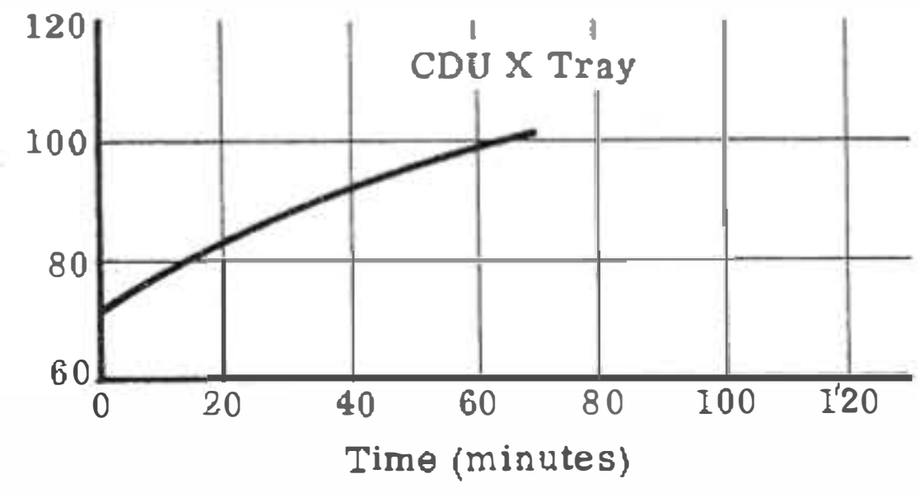

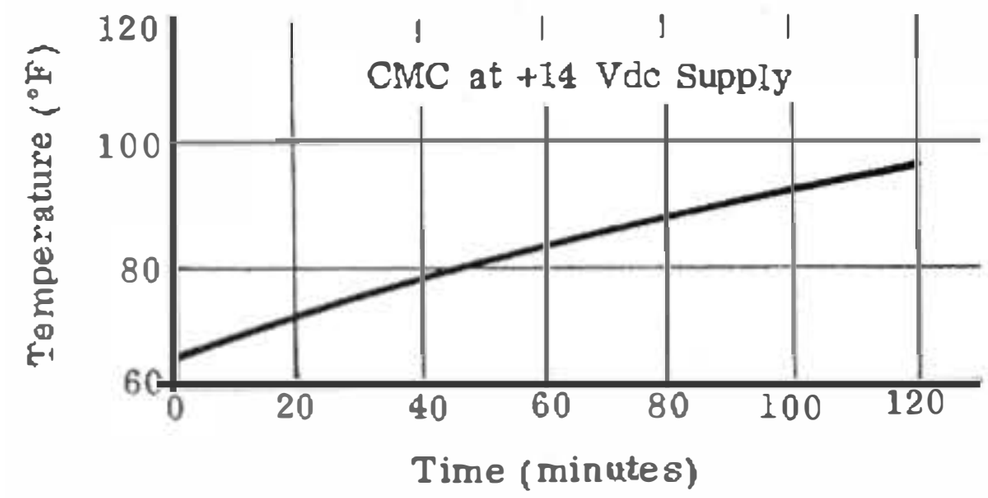

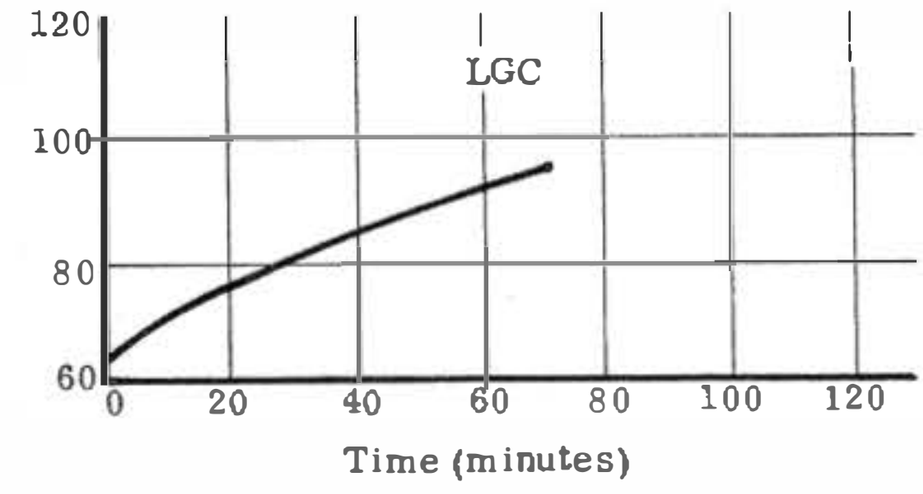

ISS WARNING LIGHT

LM — The ISS Warning light will be turned on if the Guidance Control switch is in the PGNS position and an IMU FAIL, ICDU FAIL, or a PIPA FAIL occurs.

CM — The ISS Warning light will always be turned on in both the LEB and CMP Caution and Warning stations regardless of the position of the SC Control switch whenever an IMU FAIL, ICDU FAIL, or PIPA FAIL occurs.

In both systems each of the failures are inhibited from causing an ISS Warning to be issued for specific reasons.

The IMU FAIL is inhibited:

- During the ISS turn-on period.
- When the IMU is being caged.
- When the IMU is being coarse aligned and during the first 5.12 seconds of the ensuing fine align mode.
- When the IMU CDU Zero is commanded by the astronaut for a period of 10.24 seconds.
- During R47 AGS Initialization for a period of 10.24 seconds (LM only).

The IMU CDU FAIL is inhibited:

- During the ISS turn-on period.
- When IMU CDU Zero is commanded by the astronaut for a period of 10.24 seconds.
- During R47 AGS Initialization for a period of 10.24 seconds (LM only).

The PIPA FAIL is inhibited:

- Anytime "AVERAGEG" is not running. "AVERAGEG" is normally running just prior to and during a thrusting maneuver.
- During a FRESH START.
- During the ISS turn-on period.
- At other times, only the Program Caution light with error code 00212 is allowed for a PIPA FAIL.

The Program Caution light on the DSKY will always be turned on when the computer issues an ISS Warning.

IMU FAIL

- IG or MG or OG servo error $>$ 3 Vrms (0.166°) for 2 seconds. This is a 3,200 Hz signal and is detected at the input to the respective servo amplifiers (see page HW-19).

- 28 Vac, 800 Hz, 5%, Phase B (to wheel supply) $<$ 14 V. This signal is detected at the output of the power supply and is such that if any 28 Vac, 800 Hz power supplies fail the failure will show up on this line.

- 28 Vac, 3,200 Hz, 1%, $<$ 14 V. This signal is detected on the feedback line in the regulation circuit.

Error codes for IMU FAIL.

IMU CDU FAIL

- IG or MG or OG coarse error $>$ 2 Vrms ($\theta - \psi > 30°$). This is an 800 Hz signal and is detected at the input to the emitter follower circuit preceding the coarse Schmitt trigger (see page HW-33).

- IG or MG or OG fine error $>$ 1 Vrms ($\theta - \psi > 0.7°$). This is an 800 Hz signal and is detected at the output of the main summing amplifier (see page HW-36).

- IG or MG or OG read counter limit cycle $>$160 Hz. This signal is detected from the upline output of the read counter up-down counter (see page HW-31).

- IG or MG or OG $\cos(\theta - \psi) <$ 2 Vrms. This is an 800 Hz signal and is detected at the output of the ladder amplifier (see page HW-36).

- +14 Vdc CDU power supply $<$+8 Vdc. This signal is detected at the output of the power supply.

  θ — gimbal resolver angle
  ψ — CDU read counter angle
  Error code for IMU CDU FAIL

PIPA FAIL

- No PIPA pulses for 312 microseconds.

- "+"and "-" PIPA pulses occurring simultaneously.

- No "+" and "-" pulses for 1.28 to 3.84 seconds.

OPTICS CDU FAIL

Same as IMU CDU FAIL with the exception that there is no coarse error signal.

RR CDU FAIL

Same as IMU CDU FAIL.

AGC/LGC Warning

The AGC/LGC Warning light will be turned on as a result of the following:

- Scalar Failure
- Scalar Double Failure
- AGC/LGC Power Failure
- AGC/LGC Counter Failure
- AGC/LGC V FAIL (STANDBY)
- AGC/LGC Restart (Hardware)

In addition, the Pulse Torque Power Supply Inhibit is generated every time a AGC/LGC Warning is generated. The effect is to open up the accelerometer loops and prevent any pulse torquing of gyros.

Scalar Failure

Occurs if Stage 17 of the scaler fails to produce pulses. This is the 1.28 second period scalar stage and thus a check of timing for all alarms. This failure causes immediate turn on of the AGC/LGC Warning light.

Scalar Double Failure

Occurs if the 100 pulse per second stage (.010 second period) operates at 200 pps. This provides a check on the scalar stability.

AGC/LGC Power Failure

Occurs when the prime +28 VDC power to the computer is lost. This failure causes an immediate turn on of the AGC/LGC Warning light.

Counter Failure

Occurs if counter increments happen too frequently or else fail to happen following an increment/decrement request. "Too frequently" means continuous counter requests and/or incrementing from .625 to 1.875 milliseconds.

Examples of counters are:

AGC/LGC input/output, (Time 1 and Time 2), ± CDU X, Y, Z, PIPA X, Y, Z, shaft and trunnion angles, Rate Hand Controllers R, P, Q, etc.

AGC/LGC Voltage FAIL (STANDBY)

The occurrence of a Voltage Failure while the computer is in the STANDBY mode will cause the AGC/LGC Warning light to be turned on. The causes of a Voltage Failure are given below in the RESTART section.

RESTARTS

A RESTART (hardware) and subsequent AGC/LGC Warning is generated for the following alarms:

- Oscillator Failure
- Transfer Control (TC) Trap
- Parity Alarm
- Nightwatchman Fail
- Interrupt (RUPT) Lock
- Voltage Fail

The RESTART inhibits access to memory temporarily, freezes the computer, stores in process information and then transfers control to address 4000. This address has the information address for the next instruction after a RESTART that the software programmer has provided.

In general, the programmer has chosen some particular point in a program to resume operation after a RESTART and operation continues with only small inconsequential loses of information of time and/or thrust.

Oscillator Fail

Occurs if loss of oscillator 1.024 milliseconds square wave happens. In addition a logic circuit insures a RESTART condition for a 250 millisecond interval upon transferring from STANDBY to OPERATE.

Transfer Control (TC) Trap

Occurs if too many or too few TC instructions are requested. The period for "too many" or "too few" is from 5 to 15 milliseconds in duration.

Parity Alarm

Occurs if any accessed word in fixed or erasable memory whose address is 10_8 or greater contains an even number of "ones." All locations of 10_8 or greater are stored in fixed or erasable memory with odd parity.

Nightwatchman Fail

Occurs if the computer should fail to access address 67 within a period whose duration varies from 0.64 to 1.92 seconds.

Nightwatchman assures that the computer is still operating during an extended idle period and is not tied up in some interrupt loop.

Interrupt (RUPT) lock

Occurs if an interrupt is either "too long" or "too infrequent." The time period for "too long" or "too infrequent" varies from 140 milliseconds to 300 milliseconds.

Voltage Fail

Occurs if the AGC/LGC voltages (+28, +14, or +4 VDC) are out of limits for 157 to 470 microseconds.

These limits are:

- +28 VDC supply <22.6 VDC or 20.3* VDC ±0.2 VDC
- +16 VDC<+14 VDC supply >+12.5 VDC
- +4.4 VDC<+ 4 VDC supply >+3.65 VDC

*Two types of modules are in existence. Each computer has its own particular module.

When the computer is in the OPERATE mode a RESTART is generated for Voltage Fails. If the Computer is in the STANDBY mode, the Voltage Fail is processed through the warning filter to turn on the AGC/LGC Warning light.

All of the signals with the exception of Scalar failure or a prime power (+28 VDC) failure are processed through a buffer filter that prevents momentary transients from generating failures.

The filter operates such that an output will occur if input pulses occur at a rate of greater than 0.9 pps or 6 consecutive stretched (160 milliseconds) pulses occur or a single event longer than .960 seconds, then the AGC/LGC warning lasts for a minimum of 5 seconds.

V35E - Test Lights

The computer has a test light routine, called by V35E, that tests all the lights on the DSKY. All "8's" and "+" signs are displayed along with each light turned on for 5 seconds minimum.

After the 5 seconds are completed, the lights are turned off. Note that this verb also turns off the Pulse Torque Power Supply which then causes the PIPA loops to open for approximately 5 seconds. This should be avoided if possible. The routine can be called when ISS operate is not on.

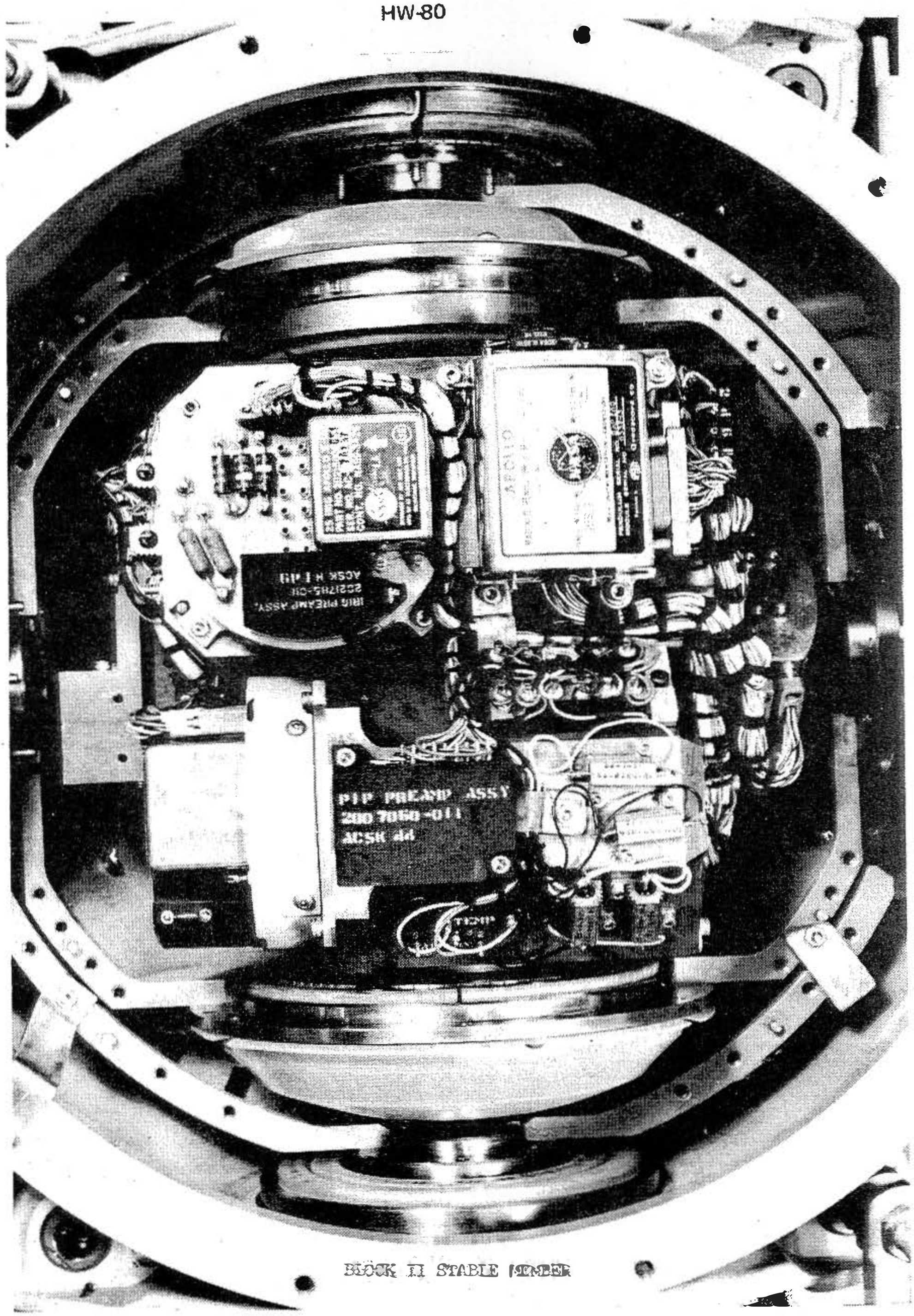

BLOCK II STABLE MEMBER

LANDING SITE LOCATIONS

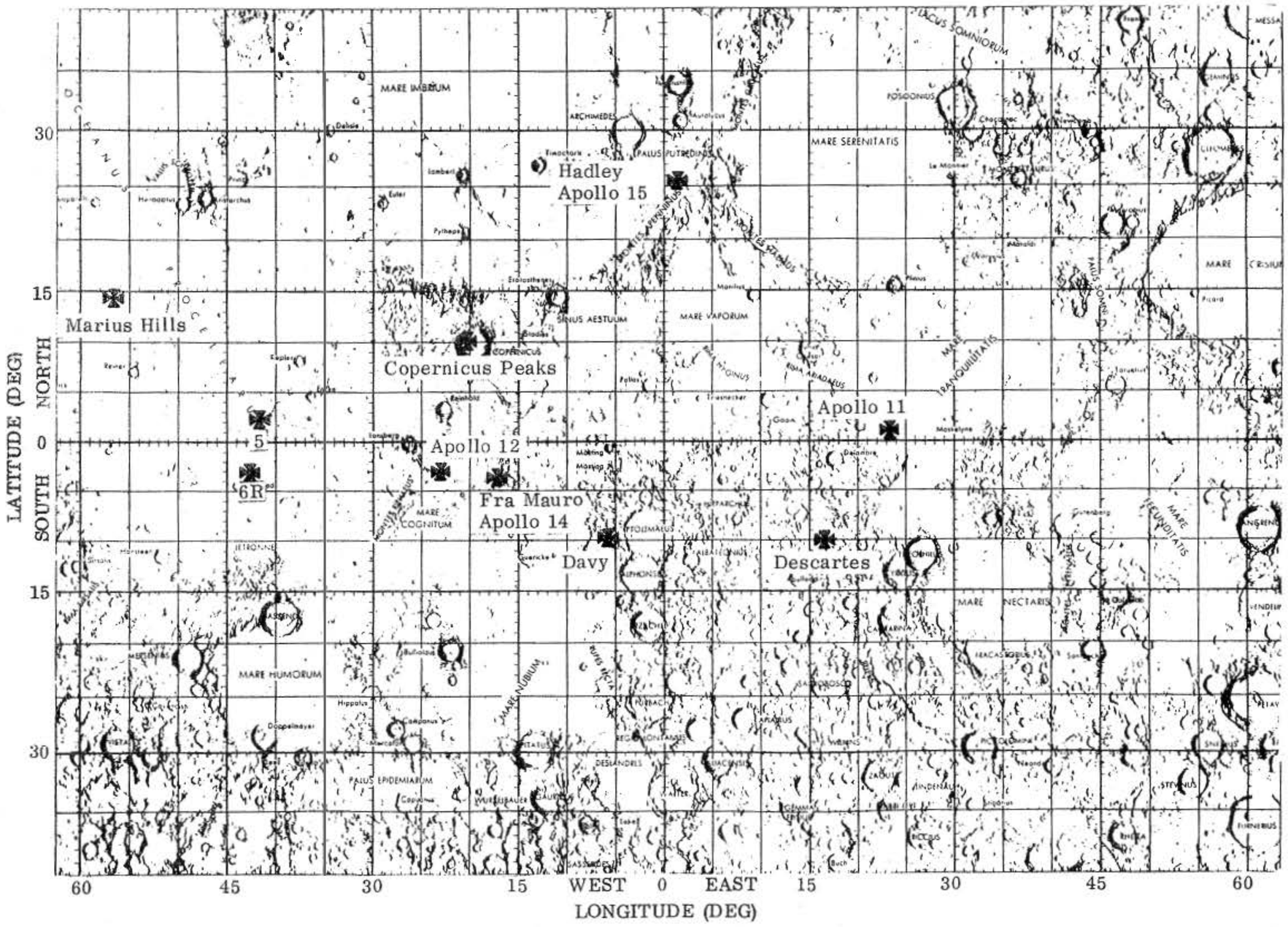

REFERENCES

1. Guidance System Operations Plan for Manned LM Earth Orbital and Lunar Missions Using Program Luminary 1C, MIT Charles Stark Draper Laboratory, Report No. R-567, Section 5, November 1969.

2. Spacecraft Operational Trajectory for Apollo 15 (Mission J-1), Launched 26 July 1971, Volume I, Mission Profile, MSC Internal Note No. 71-FM-130, 16 April 1971.

3. Spacecraft Operational Trajectory for Apollo 15 (Mission J-1), Volume II, Operational Mission Profile Trajectory Parameters, Launched 26 July 1971, MSC Internal Note No. 71-FM-112 26 March 1971.

4. Preliminary Apollo 15 Flight Plan, Change A, NASA, 1 June 1971.

5. Guidance System Operations Plan for Manned CM Earth Orbital and Lunar Landing Missions Using Program Colossus 3, MIT Charles Stark Draper Laboratory, Report No. R-577, Section 4, Rev. 16, April 1971.

6. Guidance System Operations Plan for Manned LM Earth Orbital and Lunar Missions Using Program Luminary 1C, MIT Charles Stark Draper Laboratory, Report No. R-567, Section 4, December 1969.

7. Guidance System Operations Plan for Manned CM Earth Orbital and Lunar Missions Using Program Colossus 3, MIT Charles Stark Draper Laboratory, Report No. R-577, Section 5, Rev. 14, March 1971.

8. Guidance, Flight Mechanics and Trajectory Optimization, Volume XIV - Entry Guidance Equations, NASA CR-1013, April 1968.

9. E Guidance - A General Explicit, Optimizing Guidance Law for Rocket - Propelled Spacecraft, MIT Charles Stark Draper Laboratory, Report No. R-456, August 1964.

10. Guidance, Navigation, and Control, Lunar Module Functional Description and Operation Using Flight Program Luminary, MIT Charles Stark Draper Laboratory, Report No. E-2260, March 1969

11. Apollo Operations Handbook, Lunar Module LM5 and Subsequent, Volume I, Subsystems Data, LMA790-3-LM, Grumman Aircraft Engineering Corporation, December 15, 1968.

12. Universal Lunar Module Systems Handbook, LM 4 and Subsequent Vehicles, FCO27, NASA, 17 Janu ry 1969.

13. Apollo Operations Handbook, Lunar Module LM5 and Subsequent, Volume II, Operational Procedures, LMA 790-3-LM, Grumman Aircraft Engineering Corporation, 1 May 1969.

14. Radar Section Study Guide Lunar Module LM-4, LSG 770-154-5-LM-4, Grumman Aircraft Engineering Corporation, January 1969.

15. Control Electronics Section Study Guide Lunar Module LM-4, LSG 770-154-7-LM-4, Grumman Aircraft Engineering Corporation, January 1969.

16. Declination, Radial Distance, and Ph ses of the Moon for the Years 1961 to 1971 for Use In Trajectory Considerations, NASA Technical Note D-911, August 1961.

17. Notes on the Bl ck II ECDU, AP-M-#17329, October 23, 1967.

18. Block II 25 IRIG Pulse Torquing Circuit, XDE 34-R-20, June 30, 1967.

19. Block II Stab-Amp, AP-M-#15614, April 12, 1967.

20. Notes on G&N JDC's 12220 and 12619 - The Gimbal Response Test, AP-M-#18834, May 1, 1968.

21. ECDU Computer Operate Optics, AP-M-#18281, February 26, 1968.

22. Orbital Navigation Via Landmark Tracking, AP-M-#21695, February 24, 1969.

23. Celestial Navigation, AP-M-#21569, February 4, 1969.

24. Notes on the Block II Co rse Align Loop, AP-M-#16949, Rev. 1, November 17, 1967.

25. Block II Optical Subsystem Test Results, XDE 34-T-57, Rev. D, September 6, 1969.

26. Notes on the Block II and LEM PIPA, AP-M-#17714, December 11, 1967.

27. AOT Usage During LM Operations on the Apollo 9 Mission, AP-M-#21623, February 6, 1969.

28. Astronautical Guidance, Richard H. Battin, McGraw-Hill Book Company, 1964.

29. Apollo 15 LM Timeline B k, NASA, 5 April 1971.

30. Users' Guide to Apollo GN&CS Major Modes and Routines, Rev. 3.C lossus 3 and Luminary 1E, MIT Charles Stark Draper Lab ratory Report No. E-2448, May 1971.

ELLIPSE

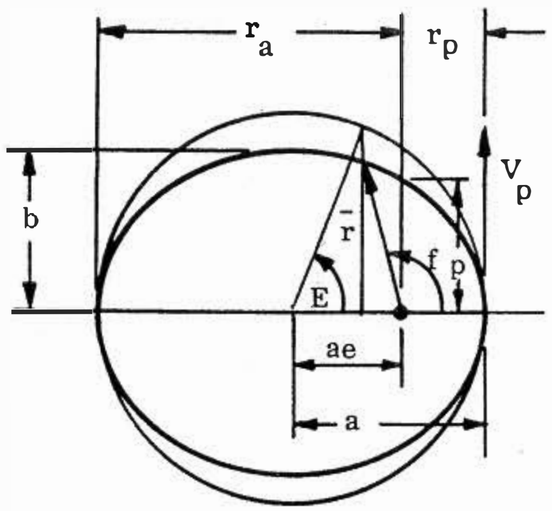

HYPERBOLA

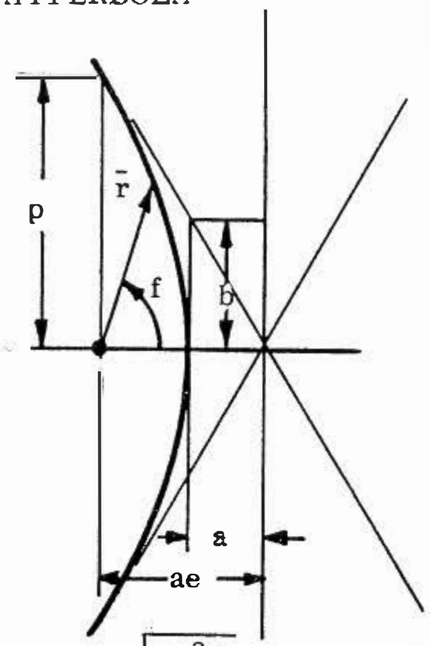

HYPERBOLIC ENCOUNTER

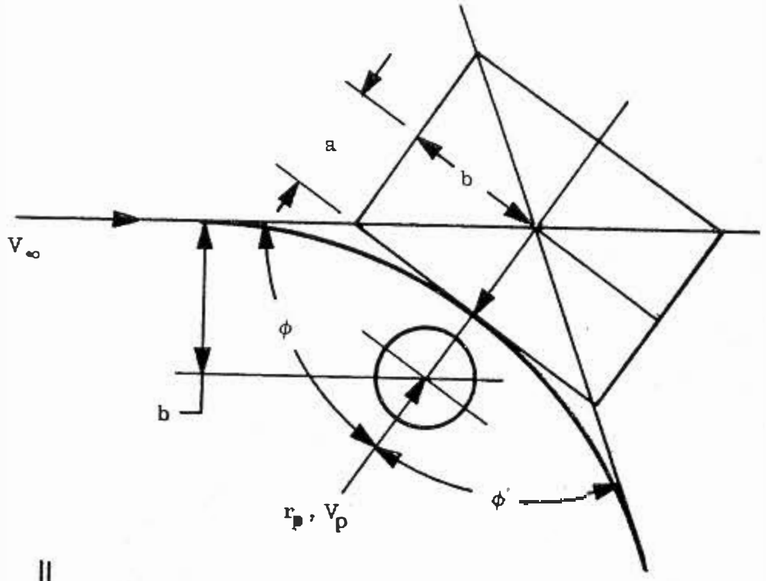

		ELLIPSE	HYPERBOLA
Semiminor Axis	b =	$\sqrt{r_a\, r_p}$	$r_p \sqrt{1+\frac{2a}{r_p}}$
Semimajor Axis	a =	$\frac{r_a + r_p}{2}$	$\frac{\mu}{V_\infty^2}$
Eccentricity	e =	$\sqrt{1 - (\frac{b}{a})^2}$ $\quad < 1$	$\sqrt{1 + (\frac{b}{a})^2}$ $\quad > 1$
Position	r =	$\frac{a(1-e^2)}{1 + e\,\mathrm{Cos}f} = a\,(1 - e\,\mathrm{Cos}\,E)$	$\frac{a(e^2 - 1)}{1 + e\,\mathrm{Cos}\,f}$
Velocity	V =	$[\frac{\mu}{a}(\frac{1+2e\mathrm{Cos}\,f + e^2}{1 - e^2})]^{1/2}$	$[\mu(\frac{2}{r} + \frac{1}{a})]^{1/2}$
Semilatus Rectum	p =	$a\,(1 - e^2)$	$a\,(e^2 - 1)$
			$V_\infty^2 = \frac{\mu}{a}$

$$V_\infty^2 = V_p^2 - 2\mu/r_p = \mu/a$$

$$r_p V_p = bV_\infty$$

$$\mathrm{Tan}\,\phi = b/a = bV_\infty^2/\mu$$

$\mu = GM_M$ $\quad ft^3/s^2$

M_M = Mass of the Moon