1949 BIENNIAL INSPECTION

STRUCTURES RESEARCH

INTRODUCTION OF FIRST SPEAKER -- DR. DUBERG
MR. HELDENFELS
MR. GRIFFITH

(In case you are wondering what this machine is, I'll just tell you now that it's a combined load testing machine. Later we'll describe and demonstrate it.)

The primary purpose of structures research is to predict the strength and distortion of the airplane structure in all flight conditions.

For the analysis of stiffened-shell structures we have developed a numerical method. The first speaker will present results obtained by applying this method to two wing problems of current interest. First, the stresses induced by aerodynamic heating at supersonic speed and second, the location of the elastic axis which is of importance in dynamic and aeroelastic problems.

Dr. Duberg ...
Mr. Heldenfels ...
Mr. Griffith ...

1949 BIENNIAL INSPECTION

STRUCTURES RESEARCH

(slide one)

Here is shown the transient distribution of the increases in temperature on the surfaces of the wing of a supersonic airplane at one instant in its flight. The airplane is flying at Mach number 2 at about 35,000 feet. Our attention is confined to the main structural portion of the wing. Temperatures are highest near the forward edge and the tip. The increased bulk of the wing inboard tends to hold down the temperature increases in this region. These four interior webs are cooler and for this instant had a temperature increase of only about 40 percent of that of the adjacent surface. Because the skin is hotter than the inside webs, it wants to expand but is restrained by the cooler interior.

(slide two)

On this following slide is shown the stresses induced in the skin by the restraint of the interior. At the wing tip the stresses are zero, but rapidly increase to a constant level. The spanwise change of the skin stresses is indicative of the shear forces in the connectors between skin and webs.

(slide three)

On this slide is shown the shear distribution in these connections. Observe how they peak up in the tip region where the skin stresses were changing so rapidly. These forces can be an important item in the design of these connections near the tip.

The same numerical method of analysis used to compute the temperature stresses just shown has also been applied to find the relation between load and deflection of a shell structure when the effects of fuselage attachment, cut-outs, or other abrupt changes in the structure are considered. This load deflection relation is an important factor in aeroelastic and dynamic problems of aircraft structures.

(slide four)

On this slide is shown a comparison of the experimentally determined elastic centers of the main box structure, of a simple shell wing, with the computed one. This straight line is the usually accepted center of this wing for the calculation of distortion. Observe how as we move in from the tip toward the root of the wing the actual elastic axis curves away from the straight line. This curving away is caused by the restraining effect of the wing attachment at the fuselage. The location of the elastic axis at the fixed root is completely determined by a second and not so well known center which is also a property of the geometry of the structure.

It is our intent to extend this study of the elastic axis to include the other structural discontinuities mentioned. Openings or access holes in the wing are particularly important because we know that the usually accepted center, corresponding to this straight line, shifts completely outside the cross-section whereas the second center does not. The true elastic axis is a compromise between these two centers so that one can expect a much larger shift for wings with cut-outs than was shown for this wing which did not have a cut-out.

1949 BIENNIAL INSPECTION

STRUCTURES RESEARCH

INTRODUCTION OF AEROELASTICITY TALK

This work on the elastic axis and structural distortion is of importance in dynamic and aeroelastic problems. Some of our work more directly concerned with these problems will be described by our next speaker.

Mr. Sanders ...
Mr. Hedgepeth ...

1949 BIENNIAL INSPECTION

STRUCTURES RESEARCH

I am going to describe some of the problems in which the structural deformations and aerodynamic loads depend upon each other. The term aeroelasticity has been coined as a name for these problems.

The first problem I'll discuss is that of finding the stresses in an airplane flying through a gust. This is one of the most complicated of the aeroelastic problems. This slide shows the displacements of a two-engine airplane at successive time intervals after entering the gust.

At first the wing tips rise faster than the fuselage, causing bending of the wing. This bending increases with time and reaches a maximum at .16 seconds. Here is where the maximum bending stress occurs. After this, the wing begins to unbend and then starts to bend in the other direction. The displacement of the fuselage lags behind the wing tips because of its high inertia. Had the weight been more evenly distributed along the span such as in a flying wing, much less bending of the wing would have occurred.

To find this distortion of the wing one has to solve an integro-differential equation. The usual way of doing that is to solve it by combining a family of deflection shapes for the structure. We have developed a much less tedious method in which we use as our unknowns the actual deflections at a number of spanwise stations. The results obtained are a series of mathematical snapshots of the distorted airplane structure at successive times. Each snapshot is determined from the three preceding snapshots by use of a recurrence relation. The recurrence relation is easily set up. When it has been set up, automatic computing equipment can be used. The shapes of the wing shown on this slide were calculated by this method in a relatively short time. The method is also applicable to other dynamic structural problems such as landing.

The gust problem just described falls in the class of dynamic aeroelastic problems. Another class is the static aeroelastic problem associated with steady flight or slow maneuvers. In the static problem, time is no longer a factor, but we must use a more refined aerodynamic theory for structural design purposes. In order to show you how importantly the force distribution and stresses are affected by use of different aerodynamic theories when combined with the same structural theory, the next <u>slide</u> has been prepared. These results are for a particular wing flying at 75 percent of the divergence speed. The solid curves represent the distribution of lift and bending moment obtained from three dimensional theory whereas the dashed curves represent what is obtained with the less exact strip theory. These differences are too large to be ignored for structural design purposes, although for other purposes such as total lift or divergence speed the strip theory is satisfactory.

To check the accuracy of the theoretical solutions such as those represented by the solid curves, special experimental methods are being explored. This flat plate wing

(speaker place hand on wing)

is one of a family of straight and sweptback wings on which both loading and deformation are being measured in wind tunnel tests. The bending moment and torsional moment are measured by standard resistance wire strain gages at several spanwise stations.

(point)

For measurement of bending slope and angle of twist, a somewhat <u>unusual</u> method was developed. For example, the relative angle of twist between any two stations of the wing is measured by a single strand resistance wire attached in a spiral between the two sections. (<u>ad.lib.</u>) This single strand wire gage is in essence a strain integrating device over the path that it traverses. The instrumentation used on this wing has a number of attractive features and results of our first wind tunnel test have been very satisfactory.

1949 BIENNIAL INSPECTION

STRUCTURES RESEARCH

INTRODUCTION OF PLASTICITY TALK

In order to simulate aerodynamic heating we have equipped one of the testing machines in this laboratory with a furnace. On this slide are shown some results of tests on the compressive buckling strength of flat plates of an aluminum alloy at room temperature, 200, 400, and 600° F. The ordinate is the compressive buckling strength. The abscissa represents essentially the plate proportions. Observe that even though the strength decreases at high temperature the experimental points follow the calculated curves. Curves like these can be calculated for plates of any material at any temperature provided the material properties at that temperature are known. More research will need to be done, however, for other loading cases and combined loads.

Along these straight line portions the structure is elastic and the removal of load restores the structure to its original condition. When these curves bend over it means that the removal of the load will no longer restore the structure to its original conditions and in this region the action is termed plastic. Observe how high temperature brings plasticity into the low stress region. An understanding of plastic behavior of material is important for all structural problems, not only strength. The next speaker will discuss our research on this subject of plasticity.

Dr. Batdorf ...
Mr. Buchert ...
Dr. Stowell ...

1949 BIENNIAL INSPECTION

STRUCTURES RESEARCH

PLASTICITY

(Use Microphone)

When a wing yields plastically due to strenuous maneuvers or severe gusts, its stiffness is reduced and it may become permanently distorted. In supersonic aircraft, these problems are accentuated because the air loads are very large and because of the weakened condition of the material due to aerodynamic heating.

A number of theories have been proposed for the plastic stress-strain relations under the combined stress conditions that occur in wings, and some time ago we checked them out in the combined load testing machine on cylindrical specimens like this.

(indicate)

We found that all these theories were deficient in one respect or another and decided to start from scratch and try to formulate a more accurate theory. To do this, we took the actual physical behavior of the plastically deforming metal as our guide. This <u>slide</u> shows a plastically stretched aluminum alloy as it appears under a microscope. These areas that look like counties in a map are called grains. They are tiny crystals of metal. These parallel markings inside some of the grains are slip lines and are caused by blocks of the crystal slipping over each other during plastic deformation something like a stack of cards.

We will now show a short motion picture that shows how these slip lines develop as the stress increases from zero to a value well into the plastic range. You can see the grain boundaries as before, but the material is still elastic so there are no slip lines. Slip starts first in this grain near the bottom center, and I suggest you keep your eye on it.

The slip lines slowly spread through the grain. Slip is developing also in other grains, till finally all of them are involved. The grain we are watching is moving upward because the tension is vertical. The slip occurs in different directions in different grains, requiring the use of a statistical approach for predicting plastic deformation.

We have developed a theory of plasticity which incorporates the principal features of slip behavior and have found that its predictions are more accurate than conventional theories.

We are currently exploring methods of applying the theory to such problems as the permanent distortion of wings in a gust.

1949 BIENNIAL INSPECTION

STRUCTURES RESEARCH

INTRODUCTION OF DEMONSTRATION OF THE COMBINED LOAD TESTING MACHINE

From the structural viewpoint, the air loads constitute a complex loading. The wings, for example, are bent and twisted at the same time.

We have therefore built this combined load testing machine which is capable of applying to a structure not only simple loads but combinations of load such as are experienced in flight.

Mr. Kotanchik will describe and demonstrate the machine.
Libove
Dow

1949 BIENNIAL INSPECTION

STRUCTURES RESEARCH

DEMONSTRATION OF COMBINED-LOAD TESTING MACHINE

(start machine)

The machine is now building up load on the demonstration specimen. It will be a few minutes before anything happens. In the meantime, I will describe the machine and explain what we are doing in the demonstration.

The combined-load testing machine consists of three main parts -- a loading unit on the left, which applies the loads, a weighing unit on the right, which measures the loads, and the control cabinet. The specimen to be tested is placed horizontally between the loading and the weighing units. The weighing unit as a whole can be moved toward or away from the loading unit to accommodate specimens of any length up to 20 feet.

The machine is very versatile. Through suitable movements of the loading head, we can apply all of the six possible components of loading, either singly or in combination. We can apply

(demonstrate by vigorous arm motions)

axial compression or tension, horizontal shear, and vertical shear; also twisting moment, horizontal bending moment, and vertical bending moment. The six components of load are indicated on the six dials of the control cabinet.

The specimen now in the machine consists of two long curved plates -- the one on top you can see; the other is below. The two are riveted along their edges to form a closed section.

The test now going on will demonstrate how the machine can be used to study the buckling strength of curved plates such as these under combined stress. The loading unit will bend the specimen upward

(motion)

and then twist it.

(motion)

The bending moment will be indicated on the dial above which is the label M_y and the twisting moment on the dial labeled M_x. The black hands on the dials indicate the loads at any given moment, and the red hands indicate the maximum loads we will apply in this demonstration.

For certain combinations of bending and twisting loads the upper curved plate of the specimen will buckle. This combined loading can be shown graphically by means of an interaction curve such as on this chart.

(slide)

Here, the horizontal axis represents compressive stress in the plate produced by the bending of the specimen and the vertical axis represents shear stress in the plate produced by twisting of the specimen. The solid curve is called an interaction curve. It divides the area into two regions. For any combination of the two loads that fall in region I the specimen will not buckle. For any combination of these two loads that falls in region II the specimen will buckle.

Right now, we are only bending the specimen so as to produce compression in the upper plate. This loading corresponds to moving along the horizontal axis of the chart. When we pass point A, the specimen will buckle. We will then be at a point such as B. Then we will decrease the compressive stress and add shear by twisting the specimen. We will be following a loading curve approximately like the one shown dotted. Whenever we cross the solid curve from region II into region I the buckles will disappear. Whenever we cross the solid curve from region I to region II buckles will reappear.

While I have been talking to you the machine has been building up the bending load on the specimen. Observe the large curvature

(motion)

of the specimen, and the vertical displacement of the loading head. Because of the angle of inclination of the specimen the loading head has to rotate about the horizontal and the vertical axes to produce the kind of bending we want. At the same time the end of the specimen has been permitted to shift horizontally and vertically to avoid the introduction of any shear loads.

Now, please direct your attention to this portion of the plate

(motion)

where we expect the first buckle to occur. Watch for the distortion of the gridwork. It was put there to make the buckles more noticeable.

(continue comments on loading and specimen until
the first buckle appears)

There's the buckle.

(Walk over to specimen and point to buckle)

Note that it is roughly oval in shape. We've just passed point A on the chart and are now at point B. The operators will now reduce the bending moment and add twist so as to follow roughly along the dotted curve. When the buckle goes out, we will know that we have reached a point such as C on the interaction curve.

(Continue remarks in accordance with what happens on specimen)

The buckle has just gone out. As the twist increases further a buckle will reappear, at which time the loading corresponds to a point such as D. This disappearance and the reappearance of buckles will happen several times as we wiggle back and forth across the interaction curve.

(Ad lib remarks on buckles, reduction of bending, increase of twist)

We're now at a point such as E. The specimen is under pure shear due to twist. Notice there is no more curvature due to bending, but a large amount of twist.

(motion)

The twist is increased and the plate buckles in pure shear. Observe the diagonal shape of the pure shear buckle.

(Point out shape of buckle)

Now, please direct your attention to the loading unit and observe the specimen untwist as we remove all load.

... This concludes the demonstration.

NACA
LAL 61091

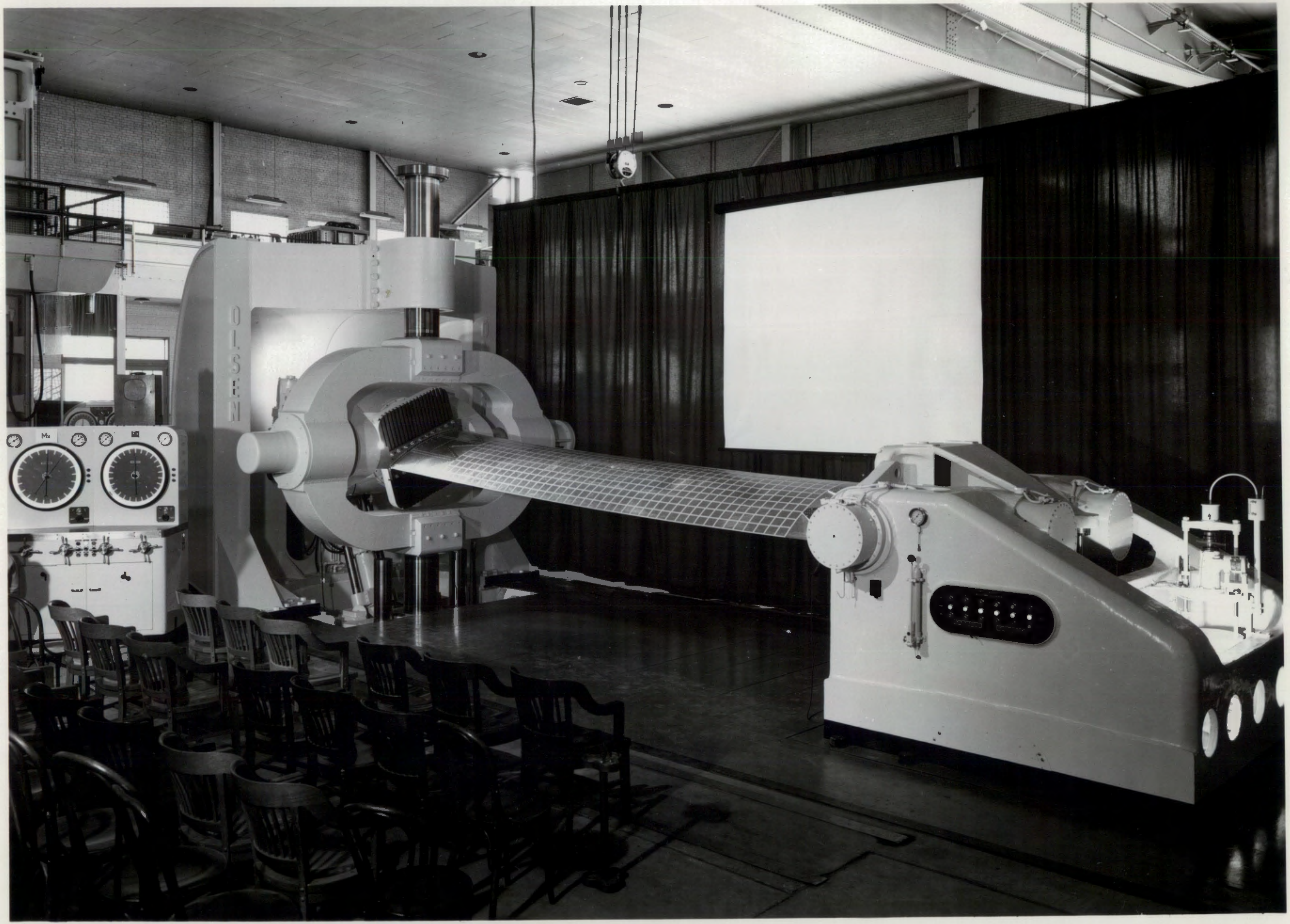

NACA
LAL 61092

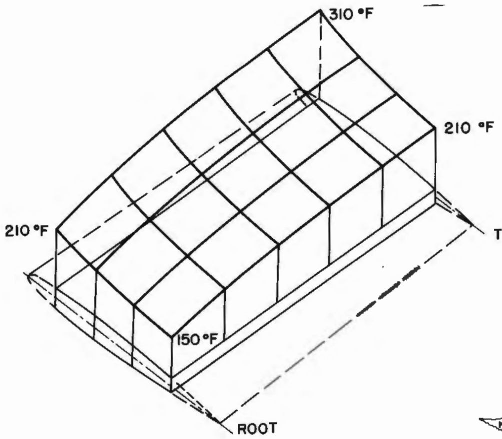
310 °F
210 °F
210 °F
150 °F
TIP
ROOT

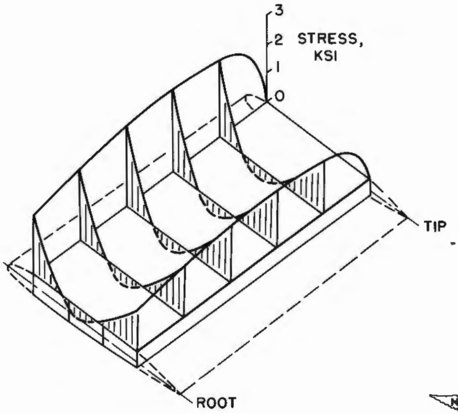
3
2
1
0
STRESS, KSI
TIP
ROOT

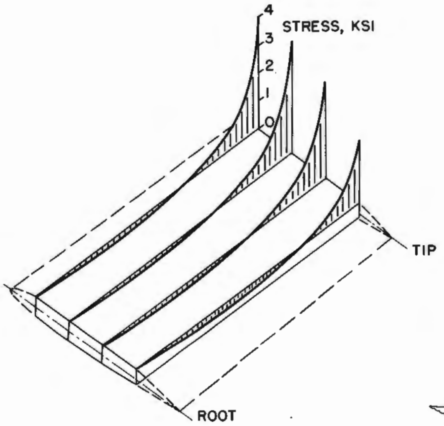
4
3
2
1
0
STRESS, KSI
TIP
ROOT

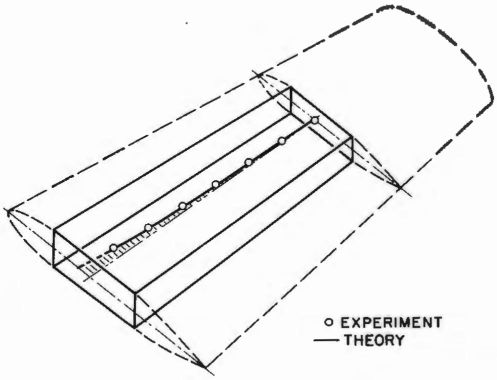
○ EXPERIMENT
— THEORY

LAL 61302

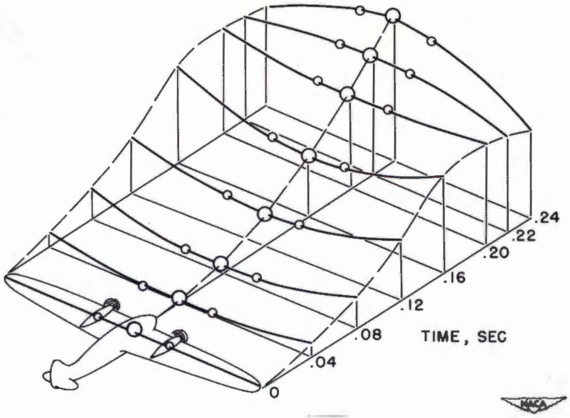

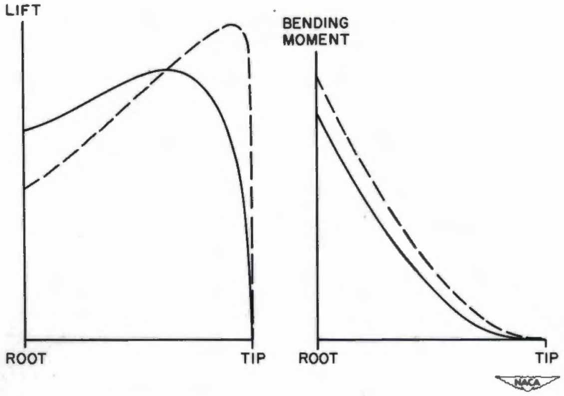

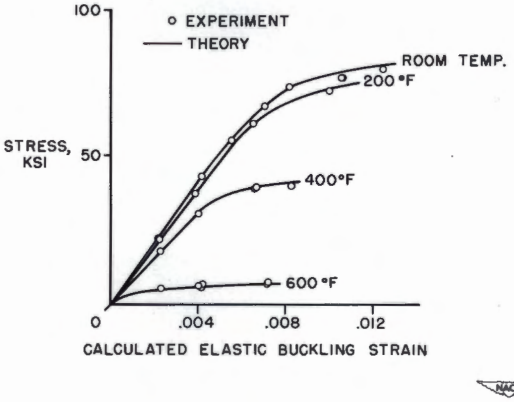

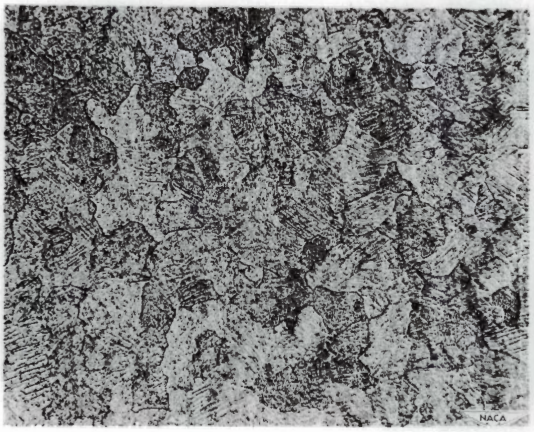

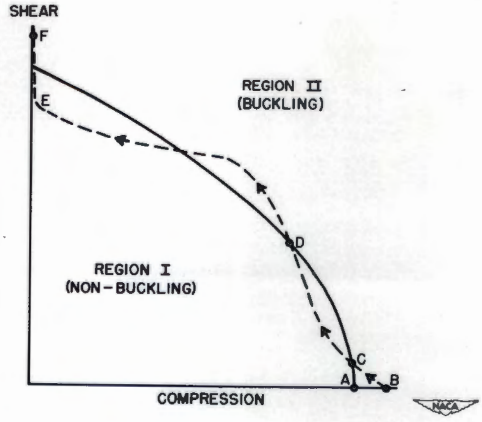

NACA
LAL 61303