AOD 33973
Rev C

SUPER GUPPY TRANSPORT USER'S GUIDE

Aircraft Operations Division

May 2023

Public Release Statement: This document has been reviewed for Proprietary, SENSITIVE BUT UNCLASSIFIED (SBU), and Export Control [International Traffic in Arms Regulations (ITAR)/Export Administration Regulations (EAR)] and has been determined to be non-sensitive. It has been released to the public via Scientific and Technical Information process, DAA 40402.

National Aeronautics and
Space Administration

Lyndon B. Johnson Space Center
Houston, Texas 77058

Verify that this is the correct version before use.

APPROVAL AUTHORITY

original signed by:

Raymond G. Heineman
Chief, Aircraft Operations Division

This page intentionally left blank

CHANGE RECORD/LIST OF EFFECTIVE PAGES

Doc. Version	Date	Process Owner/Ext.	Description
Basic	Nov 2014	D. McMahon/49698	Basic issue.
Rev A	Jan 2016	D. McMahon/49698	Clarify requirements pertaining to floor rails, rollers, lock pins, and load limits for customers designing shipping pallets that will interface with the aircraft.
Rev B	Sep 2018	D. McMahon/49698	Modify figures and update text to reflect changes to Drawing 4000003, including information on cargo floor modification, MightyGRIP cargo pallet, and MiniGRIP cargo adapter; and add Appendix B, Airlift Planning Checklist.
Rev C	May 2023	E. Prado/34902	Text and tables added to include the following: addition of dynamic coupling requirements (Section 6.9.5); loader tip over and wind analysis (Section 7.3); winch capacity (Section 6.2); customer payload mass properties form (Section 4.0); electrical loads clarification questions (Appendix B); addition of Airlift Process section (Section 11.1); load case modifications (Section 6.8) and CLT 1G load case text addition (Section 9 and 9.1.1); Batteries moved to new section (Section 7.5.12); addition of Repeat Airlift section (Section 7.8); and addition of Uninterruptible Power Supply section (Section 7.5.13). Numerous minor updates to formatting and language.

Page No. **Doc. Version**

Cover.....Rev C
i thru viii.....Rev C
1 thru 54.....Rev C

Page No. **Doc. Version**

A-1 thru A-4..... Rev C
B-1 thru B-6..... Rev C

This page intentionally left blank

TABLE OF CONTENTS

Section **Page**

1.0 PURPOSE 1

2.0 SCOPE 1

3.0 RECORDS 1

4.0 REFERENCES 1

5.0 INTRODUCTION 3

6.0 AIRCRAFT DESCRIPTION 8
6.1 GENERAL 8
6.2 CARGO PROVISIONS 10
6.3 ELECTRICAL SYSTEM PROVISIONS 10
6.4 CARGO BAY DIMENSIONS 13
6.5 AIRCRAFT CENTER OF GRAVITY 13
6.6 FLOOR RAILS, ROLLERS, AND LOCK PINS 15
6.7 CARGO FLOOR LOAD LIMITS 18
6.8 CARGO DESIGN LOAD FACTORS 20
6.9 ENVIRONMENTAL CONDITIONS 21
6.9.1 Temperature 21
6.9.2 Pressure 21
6.9.3 Acoustic Sound Pressure Level 22
6.9.4 Random Vibration 22
6.9.5 Dynamic Analysis and Ground Vibration Testing 26

7.0 CARGO REQUIREMENTS 27
7.1 SAFETY CRITICAL ITEMS 27
7.2 CARGO DESIGN FACTORS OF SAFETY 27
7.3 STRESS REPORTS 28
7.4 CARGO MASS PROPERTIES 28
7.5 CARGO DESIGN GUIDELINES 28
7.5.1 Cargo Clearance Limit 29
7.5.2 Loads 29
7.5.3 48-Foot Cargo Pallet Interface 29
7.5.4 MightyGRIP Cargo Pallet Interface 29
7.5.5 Aircraft Floor Roller and Lock Pin Interface 30
7.5.6 Materials 30
7.5.7 Weld Design 31
7.5.8 Environment 33
7.5.9 Pressure Systems and Sealed Containers 33
7.5.10 Hardware and Equipment 33
7.5.11 Flame Retardant Materials 33
7.5.12 Batteries 33
7.5.13 Uninterruptible Power Supplies 35
7.6 HAZARDOUS MATERIALS 35
7.7 NASA AIRWORTHINESS REVIEW 36

Section **Page**

7.8 REPEAT AIRLIFTS 37
7.8.1 Payload Questionnaire Form 37
7.8.2 Quality Documentation 37
7.8.3 Recurring Inspection Plan 37

8.0 SUPPORT EQUIPMENT 37
8.1 PALLETS 37
8.1.1 48-Foot Cargo Pallet 37
8.1.2 8-Foot Cargo Pallet 40
8.1.3 MightyGRIP Cargo Pallet 41
8.2 CARGO RESTRAINT HARDWARE 42
8.3 ADAPTERS 43

9.0 CARGO LOADERS 44
9.1 CARGO LIFT TRAILER 45
9.1.1 Additional CLT Considerations 47
9.2 RESCUE LOADER 48

10.0 FLIGHT COORDINATION 50
10.1 AIRCRAFT SUPPORT 50
10.2 AIRFIELD CONSIDERATIONS 51
10.3 EN ROUTE STOPS 52
10.4 SPECIAL PAYLOAD REQUIREMENTS 52

11.0 AIRLIFT PROCESS, ROLES, AND RESPONSIBILITIES 52
11.1 THE AIRLIFT PROCESS 52
11.2 NASA RESPONSIBILITIES 53
11.2.1 Flight Crew 53
11.2.2 Ground Crew 53
11.3 CUSTOMER RESPONSIBILITIES 53
11.3.1 Customer Flight Support Personnel 54

LIST OF APPENDICES

Appendix **Page**

A ACRONYMS AND ABBREVIATIONS A-1

B AIRLIFT PLANNING CHECKLIST B-1

LIST OF FIGURES

Figure **Page**

1 Super Guppy Transport 3
2 Loading Cargo Using a Pallet 4
3 Loader in Position to Load Cargo 5
4 Wide Cargo Elevated to Fit Inside the Cargo Bay 6
5 V-22 Osprey Prepared for Loading 7
6 Loaded V-22 Osprey 7

Figure **Page**

7 Aircraft Dimensions 9
8 115 VAC 60 Hz Power Strip Located in Cargo Bay 11
9 208 VAC Power Connector in Cargo Bay 11
10 15A 115 VAC 60 Hz Outlets 12
11 25A 28 VDC Outlet 12
12 Pressure Bulkhead Pass-Through 13
13 Cargo Bay Dimensions 14
14 Typical Cargo Bay Cross Section and Lock Pin Locations 16
15 Lock Pin and Floor Rail Load Limits 17
16 Floor Beam Shear Limits at FS 553 and FS 655 18
17 Cargo Floor Zones 19
18 Acoustic Sound Pressure Level 22
19 Vibration Data – Longitudinal (x) 23
20 Vibration Data – Lateral (y) 24
21 Vibration Data – Vertical (z) 25
22 48-Foot Cargo Pallet 39
23 8-Foot Cargo Pallet 40
24 MightyGRIP Cargo Pallet 41
25 Adapter Weldment Assembly 43
26 MiniGRIP Cargo Adapter Installed on 48-Foot Cargo Pallet 44
27 Cargo Lift Trailer 47
28 Maximum Observed Deflection of CLT Deck Under Load 47
29 Rescue Loader 49
30 Rescue Loader with Cargo 50

LIST OF TABLES

Table **Page**

1 Aircraft Specifications 8
2 Cargo Load Limits for FS 553 and FS 655 Floor Beams 18
3 Cargo Load Limits for All Floor Beams Except FS 553 and FS 655 19
4 Load Factors for Cargo Design[e] 20
5 Absolute Atmospheric Pressure 21
6 Emergency Climb and Descent Rates 21
7 Mode List for Empty Super Guppy 26
8 Permissible Stresses for Welds 32
9 Airworthiness Review Requirements Matrix 36
10 48-Foot Cargo Pallet Specifications 38
11 8-Foot Cargo Pallet Specifications 40
12 MightyGRIP Cargo Pallet Specifications 42
13 CLT and Rescue Loader Mass Properties 45
14 Cargo Lift Trailer Specifications 46
15 Rescue Loader Specifications 49

This page intentionally left blank

1.0 PURPOSE

This document provides the prospective Super Guppy Transport (SGT) transportation system customer with information needed to accomplish the following:

- Determine if the SGT is suitable for the customer's airlift requirements.
- Understand the SGT airlift process and logistical requirements.
- Understand the roles and responsibilities involved in the airlift process.

For more information, please contact the National Aeronautics and Space Administration (NASA) Johnson Space Center (JSC) Aircraft Operations Division (AOD) SGT Program Manager listed on the following Web page:

https://www.nasa.gov/specials/jsc-aircraft-ops/guppy.html#contact

2.0 SCOPE

This document applies to all users, potential users, and missions using the NASA JSC SGT aircraft.

Reference the AOD EDMS (Electronic Document Management System) Library to verify the latest version of this document.

3.0 RECORDS

No records are generated by this document.

4.0 REFERENCES

NOTE

Contact NASA Engineering for access to all NASA AOD documents.

Aero Spacelines report No. 700-3

Aero Spacelines report No. 700-9

AOD 40-0000088, ATA Report No. 69274, "TO A-05 Ground Vibration Test of the Super Guppy Transport with Orion Crew Module Transport Simulator"

AOD 4094013, Super Guppy Boundary Condition Stiffness

AOD 4094015, 8-Foot Pallet Tie-Down Load Allowable

AOD 4094016, Guppy Ground and Flight Temperature Data

AOD 4094019, Analysis of Lateral Loading Limits on Super Guppy Payload Retention Rails

AOD 4094022, Super Guppy Strain Flight Test and Floor Beam Analysis Updates

AOD 8594001, Preparation of Stress Analysis Reports

AOD 8594002, Design and Analysis Handbook, Aircraft Operations Division

AOD Form 424, Super Guppy Payload Mass Properties Form

AOD Form 429, Super Guppy Payload Questionnaire Form

ASL 101-1, Pallet, Rail, and Pallet Lock Analysis

American Society for Testing and Materials (ASTM) A500, Standard Specification for Cold-Formed Welded and Seamless Carbon Steel Structural Tubing in Rounds and Shapes

ASTM A572, Standard Specification for High-Strength Low-Alloy Columbium-Vanadium Structural Steel

ASTM A673, Standard Specification for Sampling Procedure for Impact Testing of Structural Steel

D98003.001, Super Guppy Interior Vibration & Acoustics Characterization

Drawing (DWG) 40-0000057, Lift Plan, MightyGRIP Assembly

DWG 40-0000061, Interface Drawing, MightyGRIP

DWG 4000003, Super Guppy Dimensional Layouts

DWG 4091537, Adapter Weldment Assy

DWG 4091540, 8-Ft Pallet Assembly, Cargo, Super Guppy

DWG 4091547, Lift Plan, 36-Foot Pallet Assembly

DWG 4091548, Lift Plan, 12-Foot Pallet Assembly

Federal Aviation Regulation (FAR) 25.853, Compartment interiors

JSC-20793 Crewed Space Vehicle Battery Safety Requirements

JSC-63322 Packaging Requirements for Launch, On-Orbit Storage and Disposal of Batteries

JSC Procedural Requirement (JPR) 1710.13, Design, Inspection, and Certification of Ground-Based Pressure Vessels and Pressurized Systems

NASA Procedural Requirement (NPR) 6200.1, NASA Transportation and General Traffic Management

National Fire Protection Association (NFPA) 701, Standard Methods of Fire Tests for Flame Propagation of Textiles and Films

National Space Transportation System (NSTS) 1700.7, Safety Policy and Requirements for Payloads Using the Space Transportation System

NSTS 1700.7 (ISS Addendum), Safety Policy and Requirements for Payloads Using the International Space Station

PRC-0001, Process Specification for the Manual Arc Welding of Aluminum Alloy Hardware[1]

[1] See https://www.nasa.gov/specials/jsc-aircraft-ops/guppy.html#contact

PRC-0005, Process Specification for the Manual Arc Welding of Carbon Steel and Nickel Alloy Hardware

Standard Operating Procedure (SOP)-009.98, Preparation of an Operation & Configuration Control Plan (OCCP) for "Category B" Pressure Vessels/Systems (PV/S)

5.0 INTRODUCTION

The SGT (see Figure 1) is part of a transportation system primarily intended for payloads that either are too large for shipment by conventional means or require special handling, such as aerospace hardware.

SGT-435

Figure 1. Super Guppy Transport

In the past, the SGT has been used to transport rocket segments, space station components, aircraft, and test articles. The aircraft is adaptable to accommodate different payloads; however, payloads must be designed to integrate with the SGT, either directly or through the use of a SGT-specific pallet (see Figure 2).

Typically, cargo is secured to a pallet and then loaded into the aircraft (see Figure 3). The tops of the pallets are flat and have threaded holes used to secure the payload. Normally, NASA-provided tie-down rings, cargo chains, and chain adjustment turnbuckles are used; however, bolts may be substituted for the rings in the event that a payload or its supporting structure can be bolted directly to the pallet. While several pallets are available for customer use (refer to Section 8.1, Pallets), a purpose-built fixture can be used in lieu of a pallet.

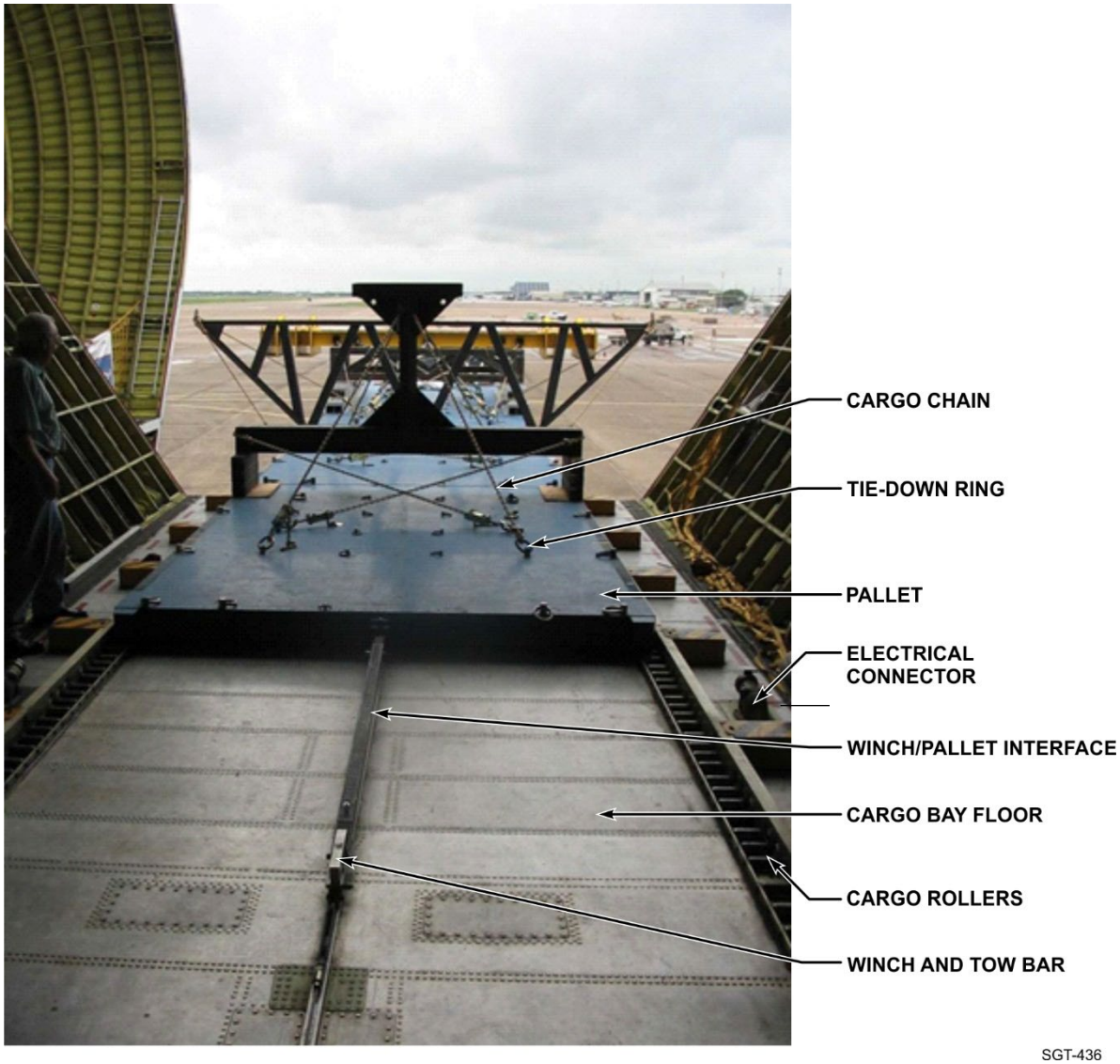

Figure 2. Loading Cargo Using a Pallet

The loader (see Figure 3) is a piece of ground support equipment designed to carry the payload to the SGT, raise the payload/pallet even with the cargo bay floor, and permit the loading or unloading of the payload. Rollers on both the loader and the SGT cargo bay floor support the weight of the payload, as it is moved from the loader into the aircraft using an aircraft-mounted winch and tow bar. Once the payload is inside the SGT, lock pins on the aircraft floor hydraulically engage holes on the sides of the pallet, thus locking the payload to the aircraft.

Payloads must be able to withstand altitude pressure changes or have adequate venting since the cargo bay is neither pressurized nor environmentally controlled. If the payload requires environmental control, the customer may elect to provide an Environmental Control System (ECS) to control the payload's temperature or humidity; the SGT can provide electrical power to the cargo bay for operation of the ECS. ECS control and payload monitoring can be accomplished by either wired or wireless means to a recording system (e.g., laptop) in the cockpit.

Figure 3. Loader in Position to Load Cargo

Because of the unique cross section of the SGT cargo bay, many payloads are too wide to fit directly on top of the pallet. Payloads are frequently required to be elevated, so that the widest part of the payload fits within the widest part of the cargo bay (see Figure 4). Structures that elevate the payload are typically developed and provided by the customer, and are "sized" to minimize weight while maximizing the strength and stiffness needed to support the payload during normal flight and emergency landing conditions.

NOTE

- Clearance must be accurately defined in the planning stage to prevent issues during cargo loading (refer to Section 7.5, Cargo Design Guidelines).
- Payloads may also need to be elevated for other reasons (e.g., to facilitate chain tie-downs).

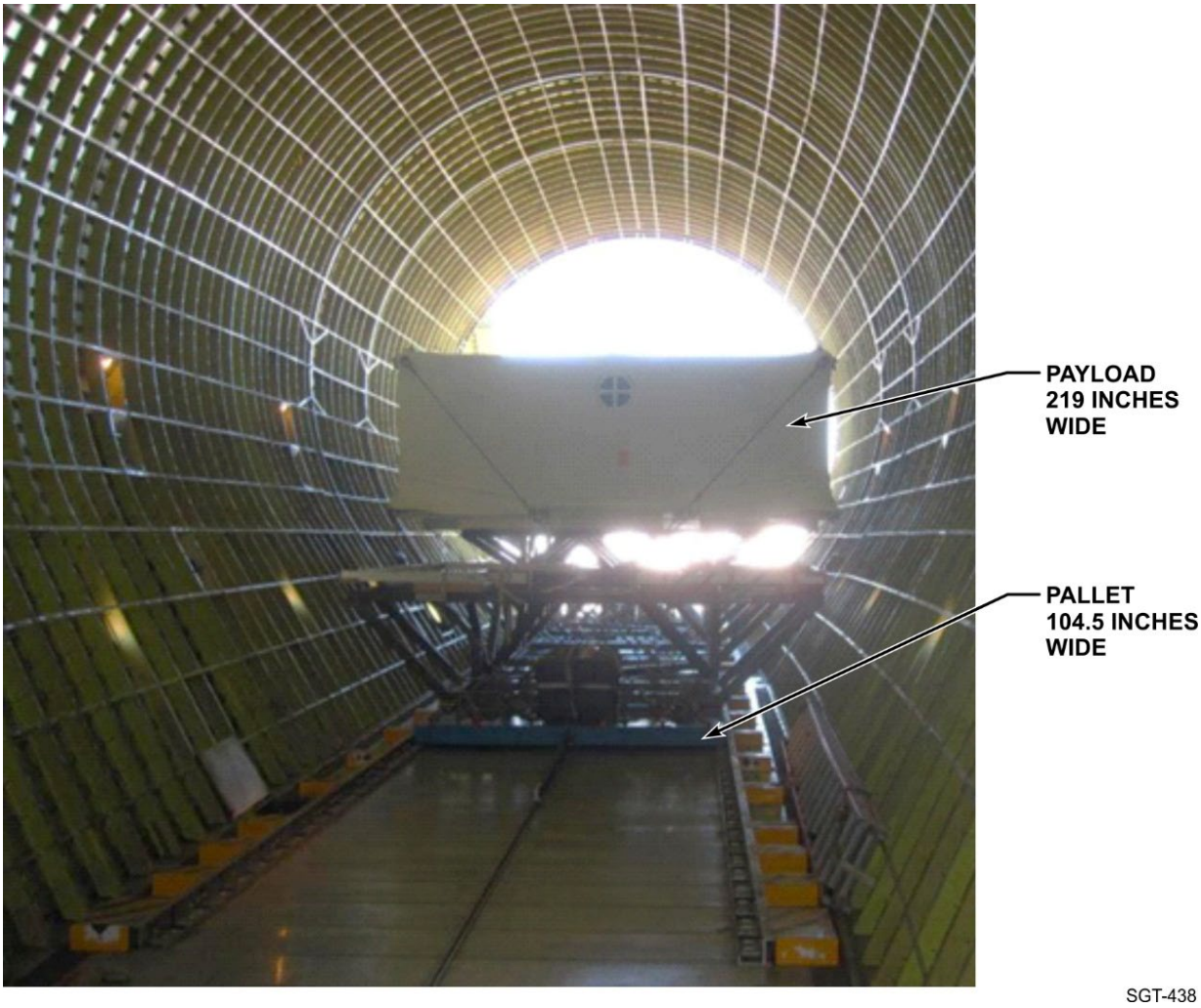

Figure 4. Wide Cargo Elevated to Fit Inside the Cargo Bay

Refer to the following case study for a discussion on payload elevation.

Payload Case Study

The V-22 Osprey is angled in such a way as to raise the nose and lower the tail (see Figure 5). The Osprey is also secured with chains and supported by a structure that distributes the weight of the aircraft along the length of the pallet.

This orientation raises the aircraft vertically to be in the widest part of the SGT and ensures the upper and lower tips of the two vertical stabilizers clear the interior (see Figure 6). The elevated position of the aircraft allows the weight to be distributed from the main landing gear to a large portion of the pallet.

SGT-439

Figure 5. V-22 Osprey Prepared for Loading

SGT-440

Figure 6. Loaded V-22 Osprey

No two payloads or customer requirements are alike; therefore, AOD works with each customer throughout the payload integration process to ensure a safe airlift. Key payload planning considerations are as follows:

- Will the integrated payload fit inside the SGT?
- Can the weight of the integrated payload be distributed on the cargo bay roller system within the aircraft floor load limits?
- Can the integrated payload be restrained for flight and crash conditions?
- Can the payload be installed and meet the longitudinal and vertical Center of Gravity (CG) requirements?

6.0 AIRCRAFT DESCRIPTION

6.1 GENERAL

The SGT is a modified Boeing C-97/B377, designated 377-SGT-F. It is powered by four Allison 501 D22 turboprop engines[2] and can accommodate a maximum Allowable Cabin Load (ACL) of 48,000 pounds (lbs), including the payload, cargo pallet(s), payload-specific aircraft equipment, and/or payload adapters.[3] For aircraft specifications and performance, refer to Table 1 and see Figure 7.

Table 1. Aircraft Specifications

Item	Value
Maximum Ramp Weight	171,000 lbs
Maximum Takeoff Weight	170,000 lbs
Minimum In-flight Weight	105,000 lbs
Maximum Landing Weight	160,000 lbs
Empty Weight	101,000 lbs
Maximum Zero Fuel Weight	154,000 lbs
Total Fuel Capacity	6,580 U.S. Gallons (USG)
Cargo Bay Dimensions	Refer to Section 6.4, Cargo Bay Dimensions
Cruise Speed	240 knots
Block Hour Speed	200 knots
Maximum Range	800 miles
ACL	48,000 lbs[3]

[2] The Allison 501-D is the commercial version of the T56 engine used in aircraft such as the C-130H and P-3.

[3] 48,000 lbs based on optimal flight conditions. The maximum payload may be reduced dependent on the flight path (e.g., distance between airports along flight path for refueling) and airfield conditions (e.g., airfield temperature and altitude). For example, for an SGT flight from the Kennedy Space Center to the east coast during the winter, 48,000 lbs may be achievable. However, for an SGT flight from the Kennedy Space Center to the west coast during the summer, 36,000 lbs may be more likely.

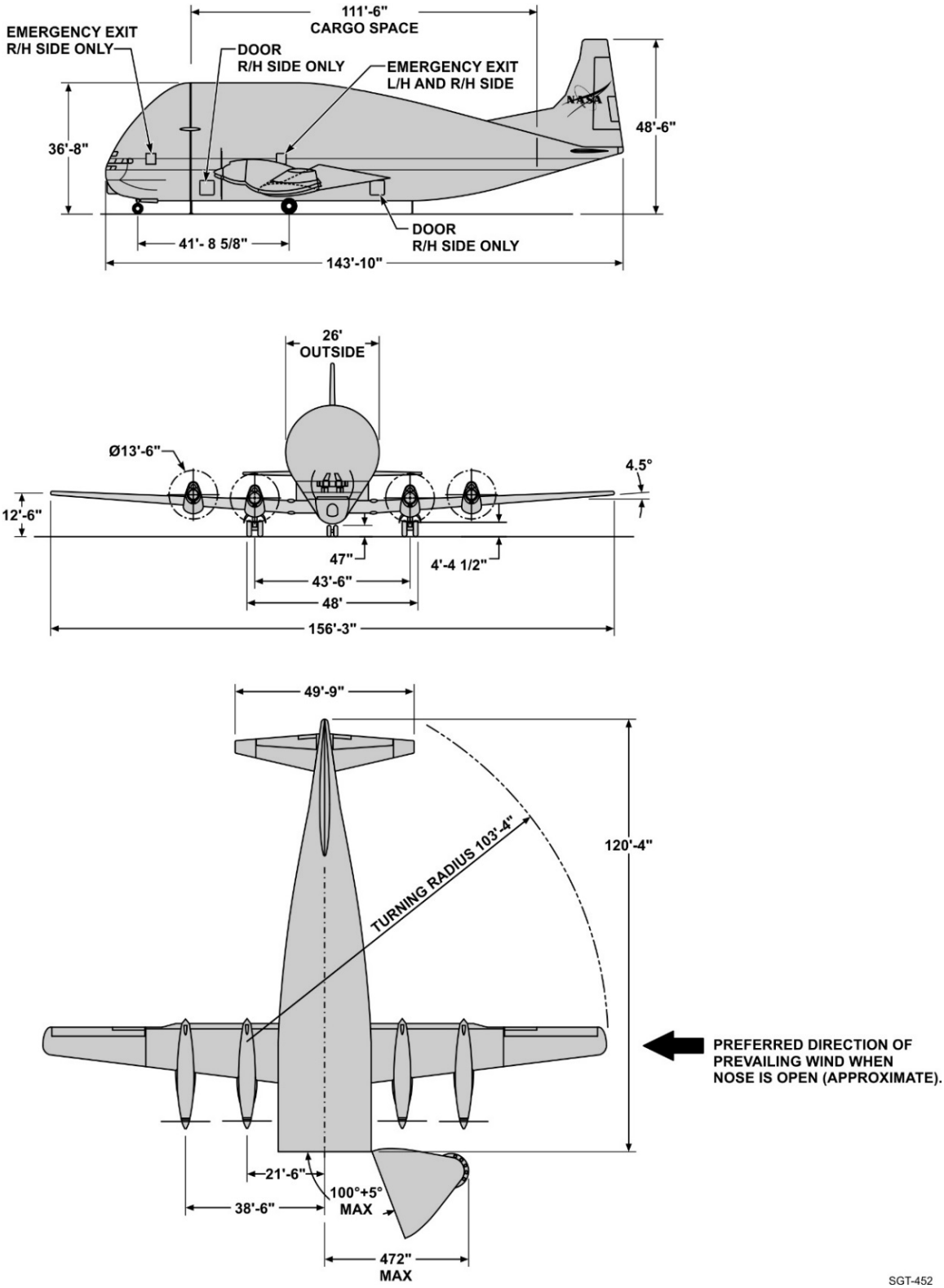

Figure 7. Aircraft Dimensions[4]

[4] See DWG 400003, Super Guppy Dimensional Layouts.

6.2 CARGO PROVISIONS

The SGT has the following provisions for cargo:

NOTE

The aircraft cargo bay is not pressurized or environmentally controlled, possibly placing altitude limitations on sensitive cargo (refer to Section 6.9 Environmental Conditions).

- Swing Nose – Payloads are installed into the aircraft through the swing nose. The swing nose, hinged at one location, is rotated 100 degrees by an electrically powered outrigger. The cargo floor is approximately 11 feet (ft) AGL (Above Ground Level); transloading cargo is accomplished by raising the loader platform to the aircraft cargo deck level.
- Lighting – The cargo area is illuminated by five flood lamps equally spaced on each side of the aircraft. Cargo bay dimensions are detailed in Section 6.4, Cargo Bay Dimensions.
- Floor Rails/Rollers – Dual parallel floor rails with rollers and guides are installed from Fuselage Station (FS) 210 to FS 1080. Rollers without rails continue from FS 1080 to FS 1160 on the cargo floor and are used only for the transloading of cargo. During loading/ unloading operations, the loader rollers are aligned with the aircraft rails.
- Winch – An electrically powered 15,000 inch-pounds (in-lbs) capacity winch is installed in the aircraft, providing up to 4,300 lbs of force to move cargo. The winch cable, routed around a series of fairleads, forms a closed loop that permits pulling/pushing of cargo in/out of the aircraft.
- Lock Pins – Forty-four (44) locking pins are installed to secure the pallet(s) or payload fixture to the aircraft. The locking pins are hydraulically powered into mating holes on the sides of the pallet(s).

6.3 ELECTRICAL SYSTEM PROVISIONS

The cargo bay has two 15 amp (A) 115 Volts Alternating Current (VAC) 60 Hertz (Hz) circuits available via two standard power strips (see Figure 8). If the customer payload requires laboratory grade power, (which may occur when instrumentation is being utilized), additional filtering equipment and an uninterruptable power source (UPS) may need to be provided by the customer. During transitions from ground power to aircraft power and vice versa, there may be momentary disruptions in power provided through the aircraft circuits.

SGT-0629

Figure 8. 115 VAC 60 Hz Power Strip Located in Cargo Bay

Additionally, there are two separate 80A sources of 208 VAC, 3 phase, 400 Hz power available to the payload (see Figure 9). The aircraft-side connector for this power source is a Part Number (P/N) APR10426 receptacle and P/N APJ10487 mating plug.

CLOSED OPEN

SGT-442

Figure 9. 208 VAC Power Connector in Cargo Bay

The cockpit area has two standard (household) 15A 115 VAC 60 Hz outlets available for laptops or other test/monitoring equipment (see Figure 10). A white covered outlet is located on the left wall forward of the pilot's seat. A silver covered outlet is located on the back wall on the lower aft corner of the Flight Engineer (FE) panel. Up to 10A of 28 Volts Direct Current (VDC) power is also available.

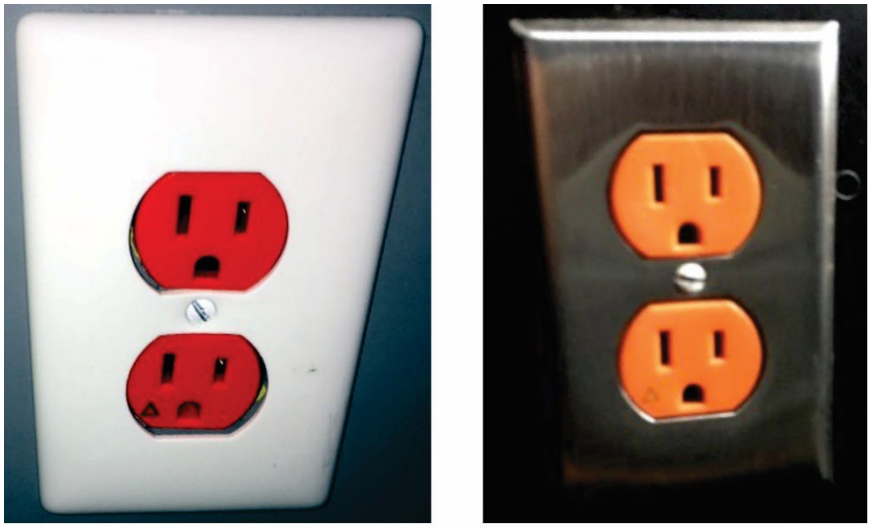

SGT-0629

Figure 10. 15A 115 VAC 60 Hz Outlets

A single 25A 28 VDC outlet is also located in the forward lower unpressurized section of the aircraft (see Figure11). If requested, it can be made available to the cargo bay using an extension cable. The mating connector for this outlet is Hubbell P/N HBL7545C.

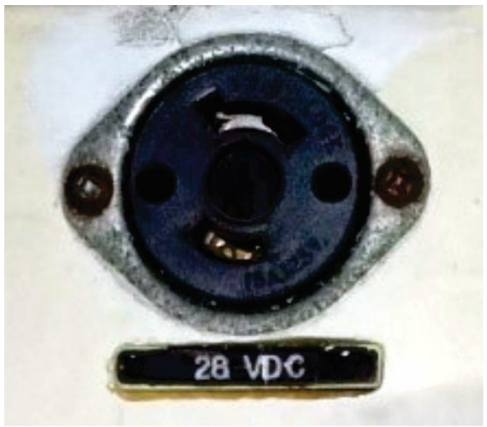

SGT-0630

Figure 11. 25A 28 VDC Outlet

Electrical cables for monitoring and control can be routed from the flight deck to the cargo bay through a 2.063-inch diameter pass-through in the pressure bulkhead (see Figure 12).

Figure 12. Pressure Bulkhead Pass-Through

6.4 CARGO BAY DIMENSIONS

The cargo bay consists of a constant cross section as well as a tapered cross section. The cargo bay has a constant cross section that is 368 inches long starting at FS 300 (see Figure 13). FS 300 is known as the "fuselage parting line," at which the hinged nose of the fuselage opens to allow loading of the cargo bay. The tapered cross section begins at FS 668 and continues to taper moving aft.

To prevent physical interference with the SGT fuselage, a 6-inch minimum clearance envelope exists (see Figure 13 and Figure 14) for both static and dynamic conditions; however, NASA's preference is to maintain a 12-inch clearance envelope to minimize detailed payload deflection analysis requirements.[5,6]

6.5 AIRCRAFT CENTER OF GRAVITY

The CG location for the entire aircraft, including payload, must be within the CG range (see Figure 13). The longitudinal location of the payload CG in the aircraft can be adjusted by rolling the payload forward and aft in 1-foot increments and then locking the payload in position using the pallet lock pins (refer to Section 6.6, Floor Rails, Rollers, and Lock Pins). The lateral CG of the payload shall be located as close as possible to the centerline of the cargo bay.

NASA loadmasters will calculate the longitudinal location of the payload in the aircraft based on the payload weight and CG data provided by the customer in AOD Form 424, Super Guppy Payload Mass Properties Form. This calculation, known as the Form F, takes into account not only the payload weight but other aircraft variables (e.g., fuel, support equipment, and number of crewmembers).

It is helpful if the customer can provide NASA with payload weight and CG estimates as early as possible so that NASA can provide a rough estimate of the payload longitudinal location in the aircraft for clearance calculations. The longitudinal location can be fine-tuned as more accurate payload weight and CG data is obtained.

---

[5] A 3-D computer model of the payload bay is available upon request.

[6] The fuselage can deflect in certain emergency flight conditions producing an estimated 6-inch maximum fuselage deflection at specific fuselage locations. This fuselage deflection must be considered with payloads approaching the 6-inch clearance limit.

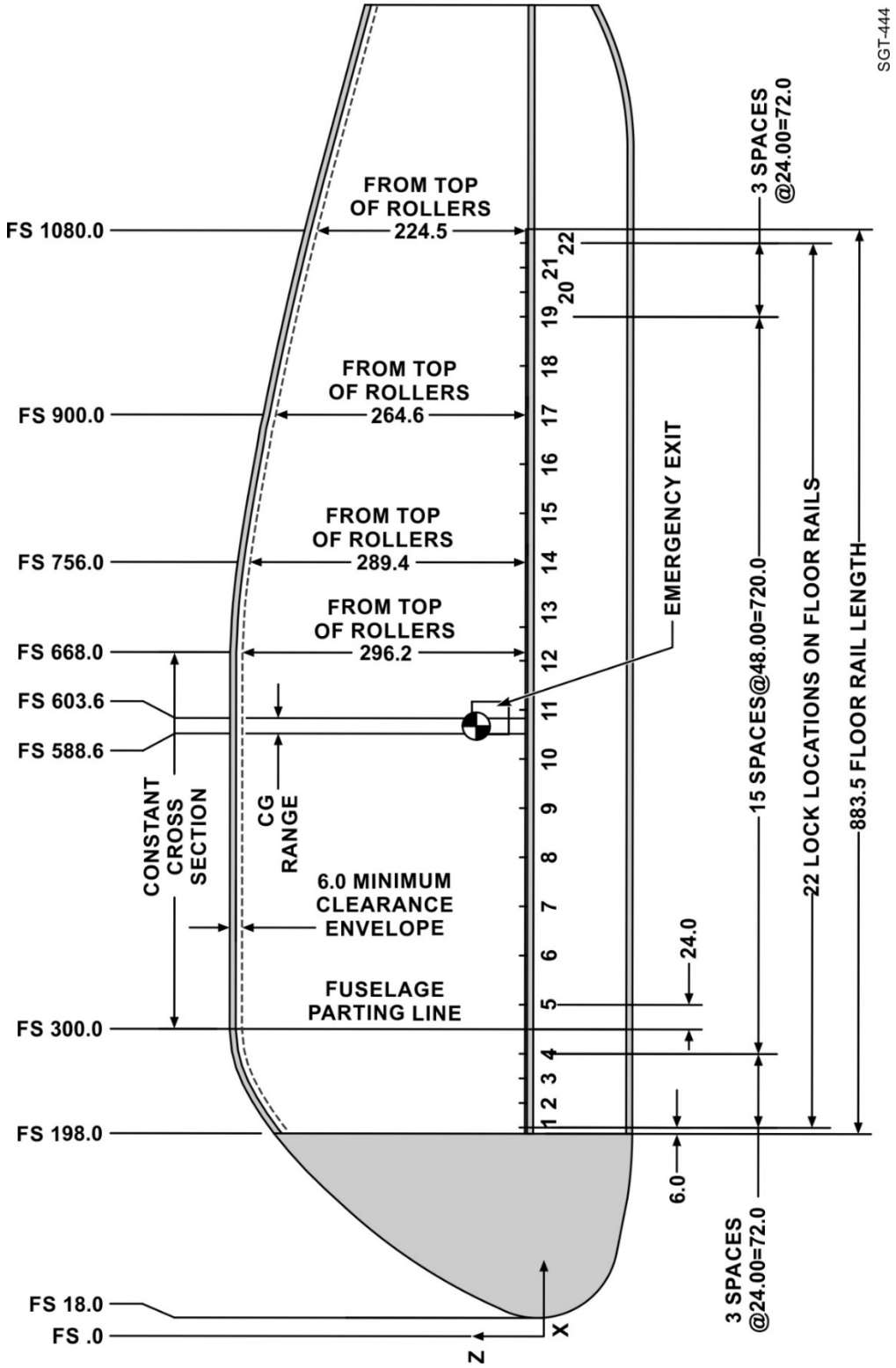

Figure 13. Cargo Bay Dimensions[7]

[7] See DWG 4000003.

6.6 FLOOR RAILS, ROLLERS, AND LOCK PINS

Cargo interfaces with the SGT via dual parallel floor rails, rollers, and lock pins (see Figure 14). The floor rails and rollers ease cargo loading and unloading. The hydraulically activated lock pins retract into the floor rails during cargo loading and extend to lock the payload when the cargo is properly positioned. Cargo is restrained by the rails, rollers, and lock pins in the following manner:

- Longitudinal (x) Direction – Lock pins in shear.
- Lateral (y) Direction – Side contact with floor rails.
- Vertical (z) Direction – Contact with rollers for down loads; lock pins in shear for up loads.

The lock pins and floor rails shown in Figure 14, Detail A, are limited to the ultimate loads shown in Figure 15.

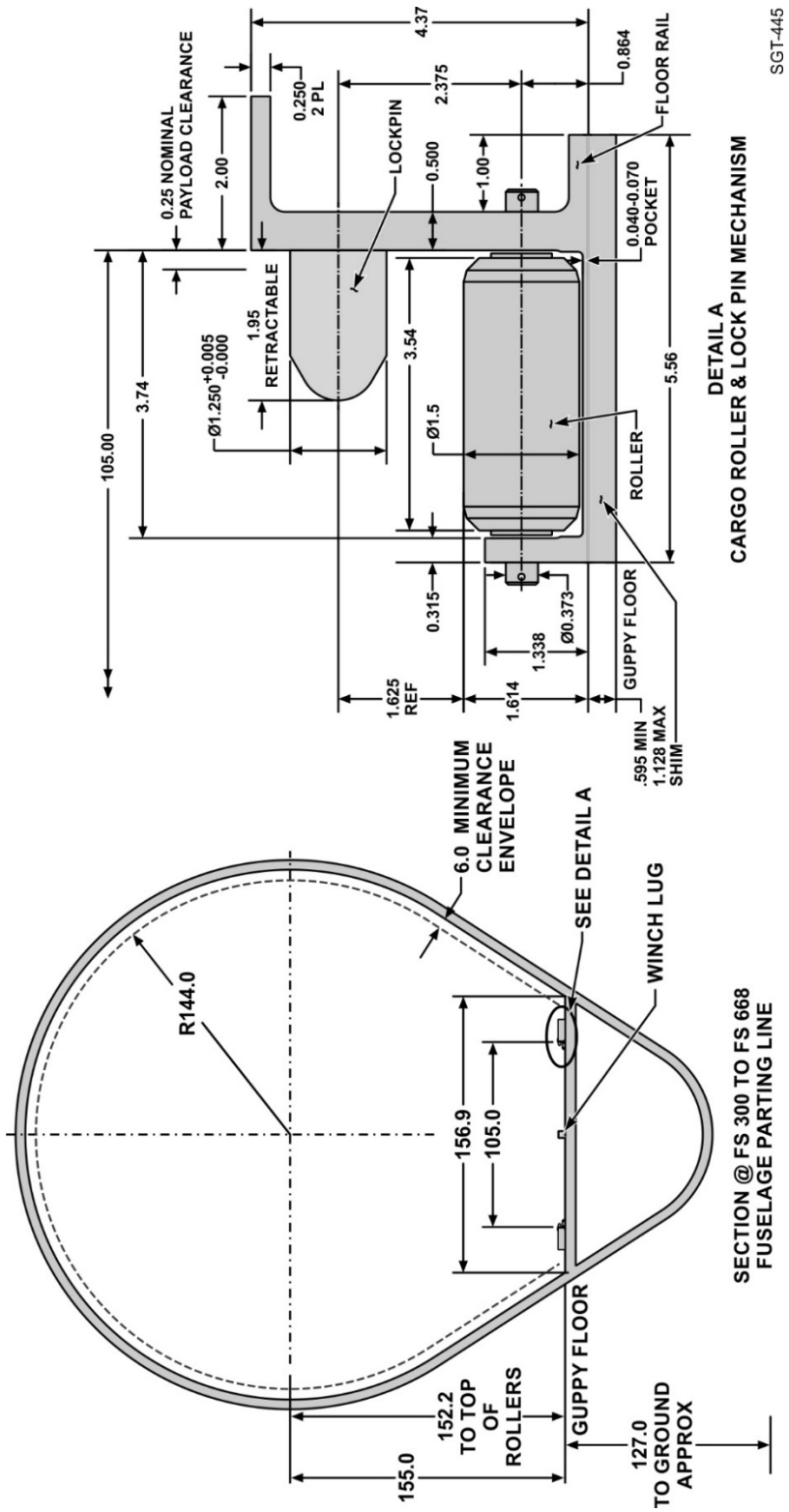

Figure 14. Typical Cargo Bay Cross Section and Lock Pin Locations[8]

[8] See DWG 4000003.

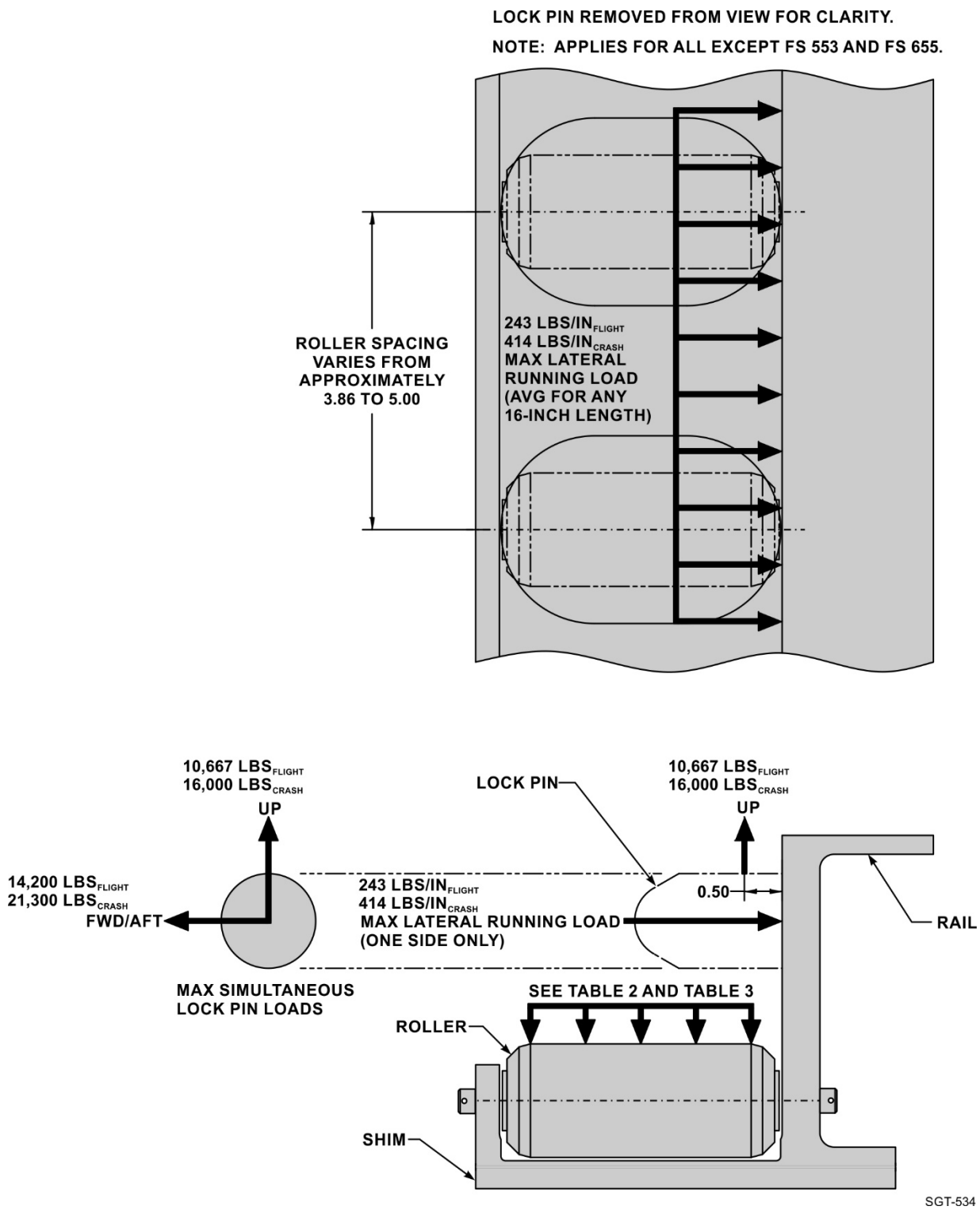

Figure 15. Lock Pin and Floor Rail Load Limits[9,10]

[9] See DWG 4000003.

[10] Refer to AOD 4094019, Analysis of Lateral Loading Limits on Super Guppy Payload Retention Rails; and ASL 101-1, Pallet, Rail, and Pallet Lock Analysis.

6.7 CARGO FLOOR LOAD LIMITS

The total cargo weight, including the payload, cargo pallet(s), payload-specific aircraft equipment, and/or payload adapters, is limited to 48,000 lbs. The cargo weight applied to each floor beam shall not exceed certain loads (refer to Table 2 and Table 3). The FS 553 Floor Beam and FS 655 Floor Beam are significantly stiffer than the other floor beams, resulting in higher local stresses[11] (see Figure 16).

See Figure 17 for cargo floor zones.

NOTE

The shear loads, shown in Table 2 and Table 3, are the total loads applied to any SGT floor beam via the roller rails, and include the weight of any pallets, if used. The shear limits, specifically for the large floor beams at FS 553 and FS 655, are shown in Table 2, and the load application is shown in Figure 16. The limits for the remaining floor beams are shown in Table 3.

Table 2. Cargo Load Limits for FS 553 and FS 655 Floor Beams[12]

Zone	1G Shear Load$_{max}$ (per side of each floor beam)	Flight Shear Load$_{max}$ (per side of each floor beam)	Crash Shear Load$_{max}$ (per side of each floor beam)
FS 553	+2,487 lbs$_{down}$	+6,400 lbs$_{down}$	+11,192 lbs$_{down}$
FS 655	+2,849 lbs$_{down}$	+7,333 lbs$_{down}$	+12,823 lbs$_{down}$

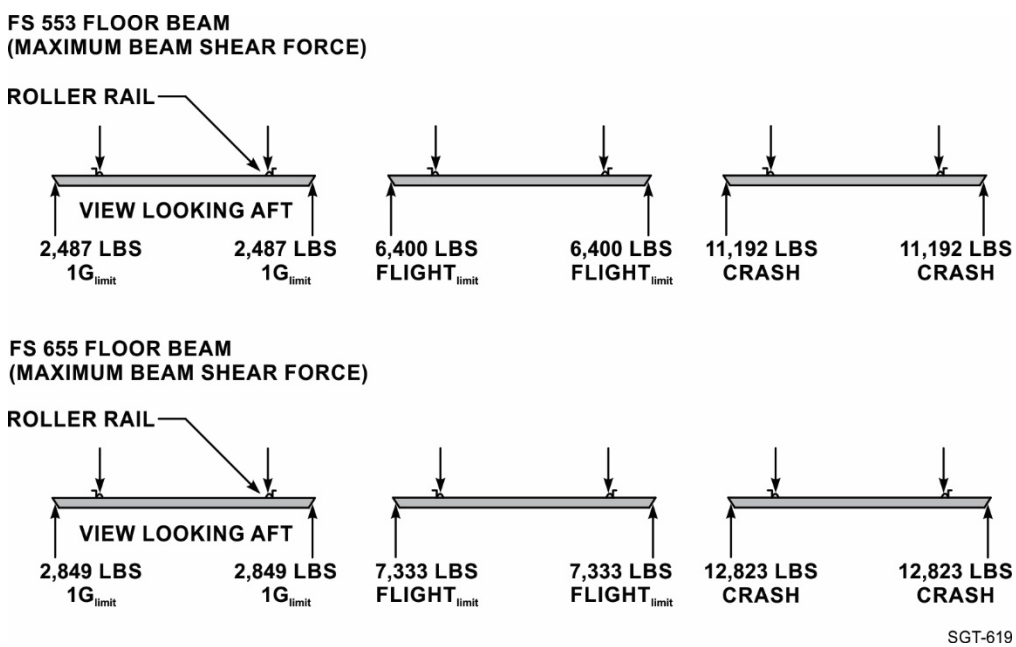

Figure 16. Floor Beam Shear Limits at FS 553 and FS 655[13]

[11] These higher local stresses were not taken into account in initial structural substantiations of the SGT. To accommodate heavier payloads, the floor has been modified to allow the load to be more evenly distributed across the floor. Refer to CCPD (Configuration Control Panel Directive) 40.06.0099, Super Guppy Floor Load Modification.

[12] Refer to Section 6.8, Cargo Design Load Factors.

[13] Refer AOD 4094022, Super Guppy Strain Flight Test and Floor Beam Analysis Updates.

NOTE

The shear loads shown in Table 3 are applied in the same manner as shown in Figure 16. The running load, in the last column of Table 3, is applied linearly (fore/aft) along each roller rail. The SGT cargo bay floor zones are shown in Figure 17.

Table 3. Cargo Load Limits for All Floor Beams Except FS 553 and FS 655[14]

Zone	**1G Shear Load$_{max}$** (per side of each floor beam)	**Flight Shear Load$_{max}$** (per side of each floor beam)	**Crash Shear Load$_{max}$** (per side of each floor beam)	**Approximate 1G Running Load$_{max}$** (average for any 16-inch length)
A	+1,000 lbs$_{down}$	+3,000 lbs$_{down}$	+4,500 lbs$_{down}$	+62.5 pounds per inch (lbs/in) per floor rail$_{down}$
B	+480 lbs$_{down}$	+1,440 lbs$_{down}$	+2,160 lbs$_{down}$	+30 lbs/in per floor rail$_{down}$
C	+400 lbs$_{down}$	+1,200 lbs$_{down}$	+1,800 lbs$_{down}$	+25 lbs/in per floor rail$_{down}$

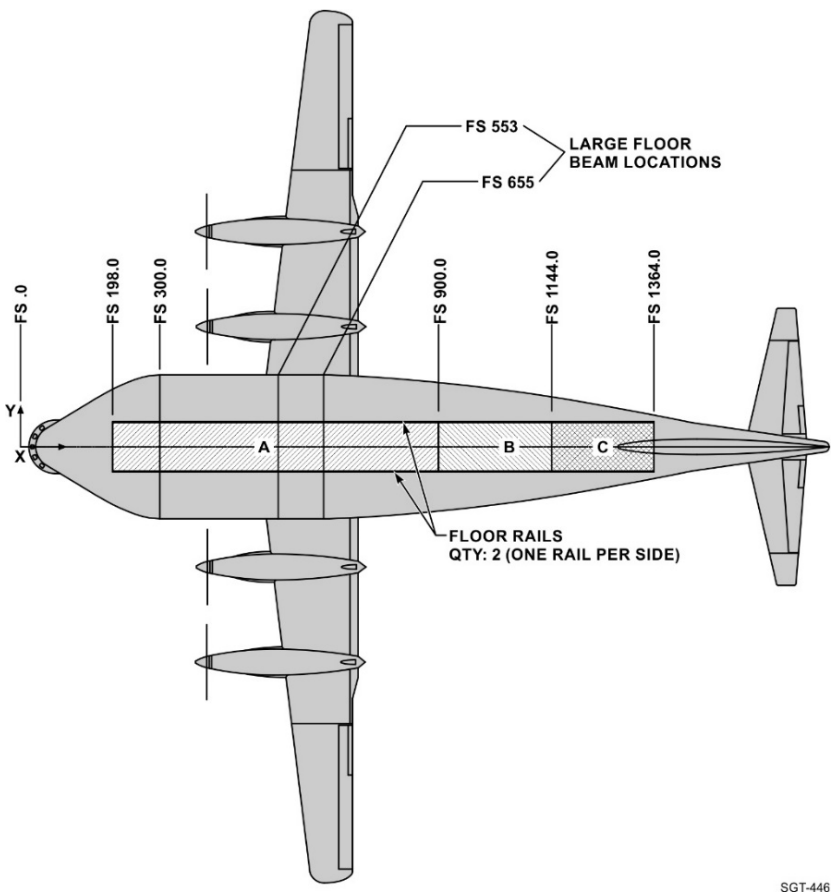

Figure 17. Cargo Floor Zones[15]

[14] Refer to Section 6.8 Cargo Design Load Factors.

[15] See DWG 4000003.

6.8 CARGO DESIGN LOAD FACTORS

Cargo shall be designed for two types of loading conditions:

- Flight Load Factors[16] [17] – Flight load factors are applied simultaneously in three directions.
- Crash Load Factors – Crash load factors are applied independently.

All cargo safety critical[18] items shall be analyzed in accordance with (IAW) the load factors listed in Table 4.

Table 4. Load Factors for Cargo Design[e]

Load Case[a]	Forward/Aft (G)	Lateral (G)	Vertical (G)[b]
Flight/Landing 1[c]	1 Forward	0	2.5 Down
Flight/Landing 2[c]	1 Forward	0	1 Up
Flight/Landing 3[c]	1 Aft	0	2.5 Down
Flight/Landing 4[c]	1 Aft	0	1 Up
Flight/Landing 5[c]	0.5 Forward	1.0 Left	1.6 Down
Flight/Landing 6[c]	0.5 Forward	1.0 Right	1.6 Down
Flight/Landing 7[c]	0.5 Aft	1.0 Right	1.6 Down
Flight/Landing 8[c]	0.5 Aft	1.0 Left	1.6 Down
Crash 1[d]	3 Forward	0	0
Crash 2[d]	1.5 Aft	0	0
Crash 3[d]	0	1.5 Left	0
Crash 4[d]	0	1.5 Right	0
Crash 5[d]	0	0	4.5 Down
Crash 6[d]	0	0	2 Up

[a] Load factors act at the CG of the cargo.

[b] Vertical load factors include 1G added for gravity.

[c] Flight loads occur simultaneously in the three directions shown.

[d] Crash loads occur independently in the three directions shown.

[e] Directions relative to aircraft

[16] Also referred to as "limit" loads.

[17] Flight/Landing Cases 5-8 were added after the completion of Artemis I CSM airlift. Accelerometers installed on the Super Guppy cargo rails indicated a lateral component of loading while landing and these load cases represent the factors that are bounding condition.

[18] Refer to Section 7.1, Cargo Requirements, for the definition of "safety critical."

6.9 ENVIRONMENTAL CONDITIONS

Environmental factors that could affect the integrity of the cargo during transport (i.e., temperature, pressure, acoustic, and vibration conditions) should be considered in the cargo design process and shall be addressed in the cargo structural analysis report (refer to Section 7.3, Stress Reports).

6.9.1 Temperature

Unless otherwise specified, 0° Fahrenheit (F) [-18° Celsius (C)] and 150°F (66°C) should be used as the temperature extremes for payload design. Although the fuselage provides some insulation, air temperature within the cargo area will eventually reach the exterior temperature at flight altitude (cold extreme). In addition to flight conditions, the temperature during ground operations shall be considered. For example, while on the ground during hot sunny days, air temperature in the cargo bay can increase greatly due to the lack of air circulation. Air temperatures as high as 150°F (66°C) have been recorded in the cargo bay during +100°F (38°C) sunny days.[19] The effects of temperature change on cargo material properties and the induced thermal stress at constrained structural members shall be taken into account during design.

6.9.2 Pressure

Standard atmosphere pressure data shall be used in design calculations based on the maximum altitude planned for the mission (typically 18,000 ft). Sample data points are shown in Table 5.

Table 5. Absolute Atmospheric Pressure

Altitude (ft)	Pressure (psia)
Sea Level	14.70
5,000	12.23
10,000	10.11
15,000	8.29
20,000	6.75

The payload structure shall be designed to accommodate the positive or negative pressures based on these climb/descent rates. If the cargo is sealed, the structure shall be analyzed based on the altitude induced pressure loads. If the cargo is vented, vents must be sized to accommodate the emergency climb and descent rates listed in Table 6.

Stresses due to pressure loading shall be accounted for in the structural analysis and combined with the flight loads; pressure loads do not need to be combined with the crash loads.

Table 6. Emergency Climb and Descent Rates

Condition	Climb/Descent Rate (ft/min)	Pressure Rate of Change (psi/min)
Climb	1,500	0.755
Descent	3,000	1.55

[19] Refer to AOD 4094016, Guppy Ground and Flight Temperature Data.

6.9.3 Acoustic Sound Pressure Level

An example of acoustic flight test data is shown in Figure 18. This data was recorded in the SGT payload bay and is provided for payloads that may be sensitive to acoustic sound pressure levels.[20]

1/3 OCTAVE PLOT and TABULAR DATA

SUPER GUPPY – INTERIOR VIBRATION & ACOUSTICS

MODEL: SHIP NO: N941NA TWR: TEST NO: TEST SITE: HOUSTON TEST ENG: B. HOARE	MEASURAND: (Ch 1) DATE PROCESSED: 27-Jan-1998 10:02:19 DESCRIPTION: MIC – STA 414, AIRCRAFT CL, 95° ABOVE FLOOR	NE830 AVG TIME = 150.0 sec AVG OASPL = 118.9 MAX OASPL = 125.5	TEST DATE: 1/21/98 TOD: 10:29:00 FLIGHT: FLT CARD: DATA TAPE: SV 3793 RECORDER: SONY SIR-1000

TEST CONDITION: TAKEOFF AND CLIMB TO 2000FT DPR #: 98-002

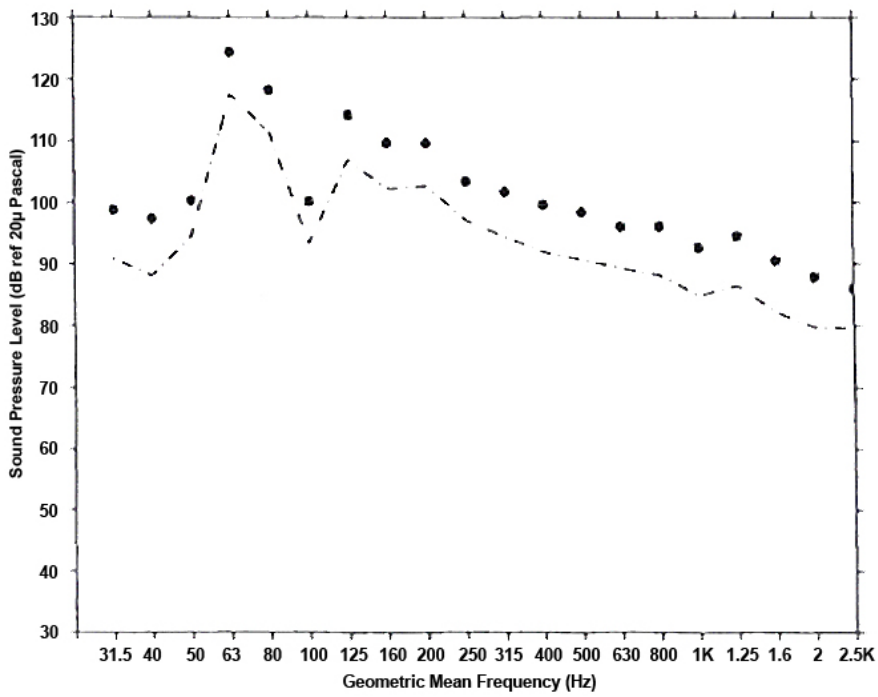

1/3 OB Frequency (Hz)	Average SPL (dB)	Maximum SPL (dB)
31.5	90.9	98.9
40.0	88.1	97.5
50.0	94.5	100.3
63.0	117.6	124.4
80.0	111.5	118.3
100.0	93.3	100.2
125.0	107.0	114.4
160.0	102.2	109.7
200.0	102.7	109.7
250.0	97.2	103.5
315.0	94.5	101.8
400.0	92.0	99.7
500.0	90.7	98.5
630.0	89.3	96.1
800.0	88.2	96.3
1000.0	84.8	92.7
1250.0	86.5	94.6
1600.0	82.2	90.6
2000.0	79.8	87.9
2500.0	79.6	86.0

Average SPL
Maximum SPL

Figure 18. Acoustic Sound Pressure Level

6.9.4 Random Vibration

Example longitudinal (x), lateral (y), and vertical (z), vibration flight test data are shown in Figure 19, Figure 20, and Figure 21. The test data was obtained using a simulated payload comprised of three pallets with a 5,000 lb ballast weight installed on each pallet for a total of 15,000 lbs.

NOTE

Figure 19, Figure 20, and Figure 21 are presented for example purposes only. Vibration-sensitive payloads may require flight testing with a test setup more representative of the payload installation.

[20] Refer to D98003.001, Super Guppy Interior Vibration & Acoustics Characterization.

POWER SPECTRAL DENSITY PLOT

SUPER GUPPY – INTERIOR VIBRATION & ACOUSTICS

MODEL: SHIP NO: N941NA TWR: TEST NO: TEST SITE: HOUSTON TEST ENG: B. HOARE	DATE PROCESSED: 13-Feb-1998 09:26:31	SAMPLE PLATE = 2049 s/s FILTER BW = 2 Hz AVG TIME = 60.96 sec AVE/OVERLAP = 122 / 0 WINDOW = HANN FLT MAX RMS = 0.137	TEST DATE: 1/21/98 TOD: 10:17:00 FLIGHT: FLT CARD: DATA TAPE: SV 3793 RECORDER: SIR-1000
TEST CONDITION: FULL FLIGHT PROFILE			DPR #: 98-003

PARAM # (Ch 9) DESCRIPTION: STA 550, LHS CARGO RAIL – LONG (G)

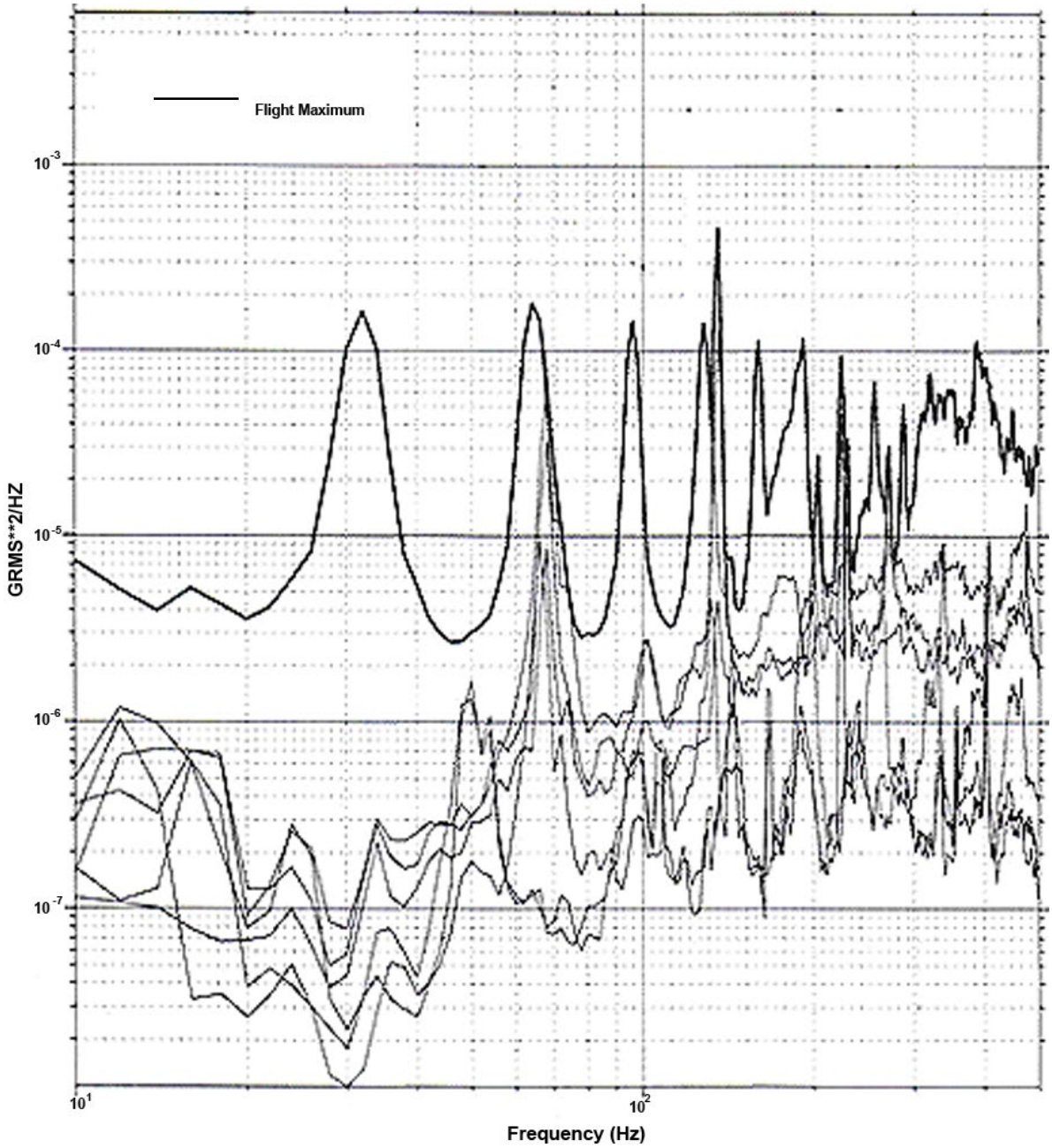

Figure 19. Vibration Data – Longitudinal (x)

POWER SPECTRAL DENSITY PLOT

SUPER GUPPY – INTERIOR VIBRATION & ACOUSTICS

MODEL: SHIP NO: N941NA TWR: TEST NO: TEST SITE: HOUSTON TEST ENG: B. HOARE	DATE PROCESSED: 13-Feb-1998 09:25:02	SAMPLE PLATE = 2049 s/s FILTER BW = 2 Hz AVG TIME = 60.96 sec AVE/OVERLAP = 122 / 0 WINDOW = HANN FLT MAX RMS = 0.28	TEST DATE: 1/21/98 TOD: 10:17:00 FLIGHT: FLT CARD: DATA TAPE: SV 3793 RECORDER: SIR-1000
TEST CONDITION:	FULL FLIGHT PROFILE		DPR #: 98-003

PARAM # (Ch 8) DESCRIPTION: STA 550, LHS CARGO RAIL – LAT (G)

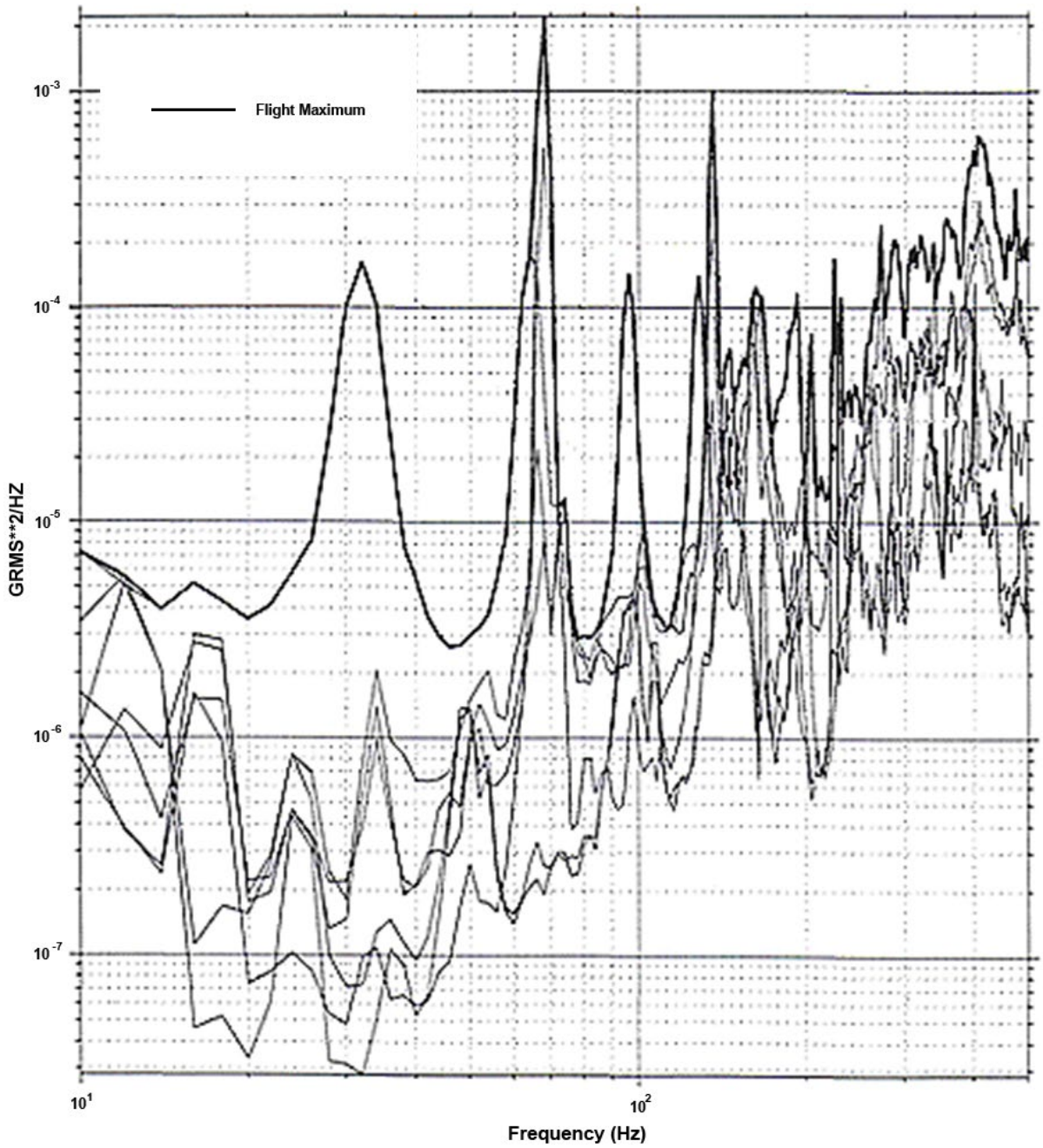

Figure 20. Vibration Data – Lateral (y)

POWER SPECTRAL DENSITY PLOT

SUPER GUPPY – INTERIOR VIBRATION & ACOUSTICS

MODEL: SHIP NO: N941NA TWR: TEST NO: TEST SITE: HOUSTON TEST ENG: B. HOARE	DATE PROCESSED: 13-Feb-1998 09:29:27	SAMPLE PLATE = 2049 s/s FILTER BW = 2 Hz AVG TIME = 60.96 sec AVE/OVERLAP = 122 / 0 WINDOW = HANN FLT MAX RMS = 0.3131	TEST DATE: 1/21/98 TOD: 10:17:00 FLIGHT: FLT CARD: DATA TAPE: SV 3793 RECORDER: SIR-1000
TEST CONDITION:	FULL FLIGHT PROFILE		DPR #: 98-003

PARAM # (Ch 16) DESCRIPTION: STA 790, LHS CARGO RAIL – VERT (G)

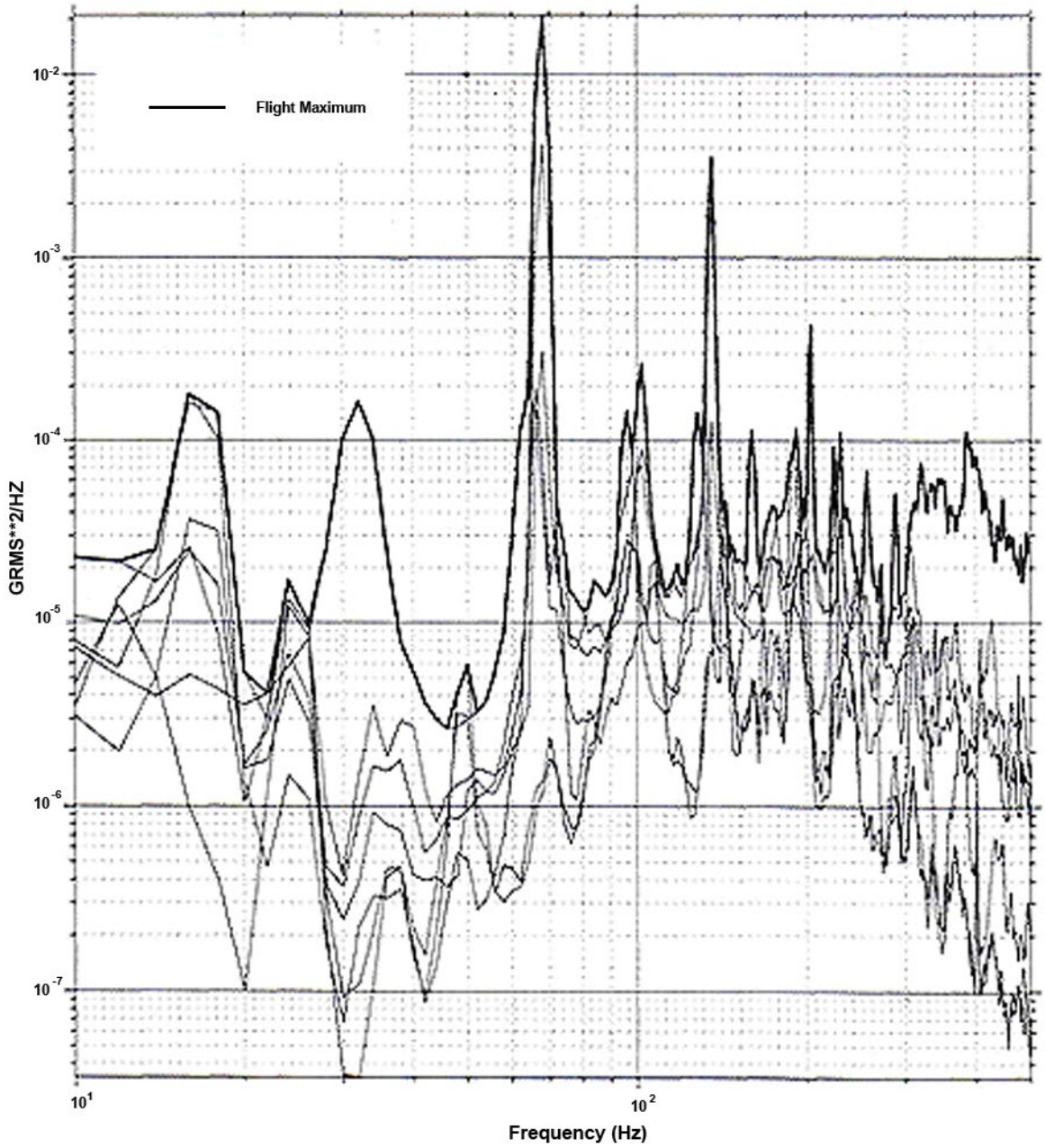

Figure 21. Vibration Data – Vertical (z)

6.9.5 Dynamic Analysis and Ground Vibration Testing

Dynamic interaction between the aircraft and a payload is payload-specific and may be of concern for certain payloads. To provide some information, Ground Vibration Testing (GVT) was performed for the Super Guppy with and without a simulated payload. The modes and resonant frequencies for the empty Super Guppy were identified and are provided in Table 7. This table and further information are available in report AOD 40-0000088.

Table 7. Mode List for Empty Super Guppy

Mode No.	Mode Shape Description	Frequency (Hz)	Damping (% crit.)
1	wings 1st vertical bending anti-symmetric	2.04	1.85
2	wings 1st vertical bending symmetric	2.21	1.69
3	wings 1st vertical bending symmetric, fuselage roll	2.99	1.95
4	wings 1st vertical bending anti-symmetric, fuselage yaw	3.95	1.23
5	outboard nacelles pitch symmetric, wings 1st bending vertical symmetric	4.15	1.42
6	wings 1st fore-aft bending symmetric	5.08	0.83
7	empennage roll	5.57	0.65
8	outboard nacelles pitch anti-symmetric, wings 2nd bending vertical anti-symmetric	5.97	1.04
9	wings 2nd vertical bending symmetric, fuselage breathing	6.35	1.13
10	H-stab 1st vertical bending anti-symmetric	6.83	0.89
11	inboard nacelles pitch symmetric, wings 2nd bending vertical symmetric	6.92	0.52
12	inboard nacelles pitch anti-symmetric, wings 2nd bending vertical anti-symmetric	7.02	1.19
13	fuselage lateral bending	7.84	1.06
14	H-stab 1st vertical bending symmetric,	7.96	0.56
15	inboard/outboard nacelles yaw anti-symmetric, fuselage roll, wings 2nd vertical bending	9.52	0.89
16	inboard/outboard nacelles yaw symmetric, fuselage vertical bending	9.78	1.11
17	fuselage vertical bending	10.35	1.15
18	wings 2nd vertical bending anti-symmetric	11.05	1.07
19	wings 3rd vertical bending symmetric	12.60	2.32
20	port inboard/outboard nacelles pitch out-of-phase, port wing 3rd vertical bending	13.58	0.87
21	stbd inboard/outboard nacelles pitch out-of-phase, stbd wing 3rd vertical bending	13.60	0.57
22	wings 2nd fore-aft bending anti-symmetric	14.33	1.25
23	wings 2nd fore-aft bending symmetric	15.06	1.41
24	H-stab 1st fore-aft bending anti-symmetric	15.58	0.99
25	floor vertical bending, wings fore-aft 2nd bending	16.17	0.56
26	floor vertical bending, port wing 3rd bending vertical	17.16	1.04
27	floor vertical bending, stbd wing 3rd bending vertical	17.40	1.13
28	stbd wing 1st torsion	23.50	1.52
29	port wing 1st torsion	23.58	1.42
30	port outboard nacelle vertical, port wing torsion	25.89	0.57
31	stbd outboard nacelle vertical, stbd wing torsion	26.86	0.61

Modes that result in floor movement along with low order frequencies (below 20 Hz) are typically most relevant for payloads as they are considered structurally significant. Frequencies above are considered environmental conditions. Care shall be taken to ensure that dynamic coupling will not occur between the payload and the aircraft. Further engineering evaluation and approval may be required if the possibility of dynamic coupling or dynamic amplification exists.

General guidance is for the payload resonant frequencies to be one (1) octave away from aircraft floor frequencies to prevent coupling.

In addition to the modes and frequencies provided above, the propellers have a resonant frequency of 17 Hz which has been observed in previous GVTs.

For additional historical reports covering GVT, modal data and vibration analysis, refer to Aero Spacelines report No. 700-3 and report No. 700-9. Animations of aircraft modes is available upon request in FEMAP Neutral File format.

7.0 CARGO REQUIREMENTS

This section specifies the design requirements for cargo transported on board the SGT. The guidelines are provided to ensure the safe delivery of the cargo during normal operational conditions (limit load condition) as well as the safe egress of the aircrew in the event of an emergency landing (crash condition).

NOTE

The AOD Engineering Branch has the final sign-off on the airworthiness of the cargo and the cargo restraint method.

7.1 SAFETY CRITICAL ITEMS

This document refers to "safety critical" items. Failure of a safety critical item can result in a catastrophic hazard (i.e., critical damage to the aircraft or injury to personnel).

7.2 CARGO DESIGN FACTORS OF SAFETY

All cargo flight safety critical items shall be analyzed IAW the Factors of Safety (FS) in AOD 8594002, Design and Analysis Handbook, Aircraft Operations Division, Appendix B.3, Cargo Load Factors. The FS are intended to prevent permanent, detrimental deformation under limit loads and to prevent structural failure under crash loads. The FS in AOD 8594002, Appendix B.3, shall be used to calculate the Margin of Safety (MS) IAW the following equation [for crash loads, the FS is equal to one (1)]:

$$MS = \frac{Allowable\ Stress}{Applied\ Stress\ \times\ Safety\ Factor} - 1$$

All cargo elements shall have a positive MS. The allowable stress is the material yield stress for limit loads and ultimate stress for crash loads.

7.3 STRESS REPORTS

A stress report[21] shall be prepared by the customer covering the cargo installation in the aircraft. The stress report shall address both in-flight limit loads and crash loads and shall show positive margins for all load conditions. The stress report shall, at a minimum, include the following:

- Calculations for flight safety critical cargo and shipping fixture structures including welded or bolted joint analysis.
- Calculations for floor loading showing that running loads identified in Section 7.5, Cargo Design Guidelines, are not exceeded.
- Calculations for any chain or bolted pallet tie-downs showing that tie-down loads are not exceeded.[22]
- Calculations for rigging lift points.[23]
- Deflection analysis showing that the minimum 6-inch clearance envelope is not violated.
- Consideration of wind loading that may contribute to tip-over during ground operations (i.e., elevated loader operations) if not bounded by past payloads.
- Calculations of stresses and deflection of payload for 1G load case on CLT as detailed in Section 9.1.1.
- Payload resonant frequencies and mode shapes as well as consideration of dynamic coupling with aircraft resonant frequencies.

Additional clarification or analysis may be requested beyond the listed items for payloads with unique considerations. Early engagement with AOD is recommended to determine potential consideration.

7.4 CARGO MASS PROPERTIES

Customers shall provide the final as-measured mass properties to the AOD Engineering Branch, including the total cargo weight and CG location in all three directions (x, y, z) prior to flight. The CG location shall be referenced to lock pin hole #1 in the pallet (see Figure 22). Weight and balance calculations for the loaded aircraft will be performed by NASA loadmasters to verify payload weight and CG compliance and to determine payload positioning in the aircraft.

The Super Guppy Payload Mass Properties worksheet, AOD Form 424, shall be provided for both initial and refined estimates.

7.5 CARGO DESIGN GUIDELINES

The following guidelines shall be used for payload design.

[21] Refer to AOD 8594001, Preparation of Stress Analysis Reports, for stress report preparation guidance.

[22] Contact NASA AOD Engineering for SGT floor stiffness and chain analysis guidance.

[23] Lift points require an FS = 5.

7.5.1 Cargo Clearance Limit

The minimum cargo "dynamic" clearance to the SGT fuselage shall be 6 inches.[24] For cargo approaching the 6-inch clearance limit, a detailed deflection analysis shall be performed that takes into account all combined dynamic deflections for flight load conditions (e.g., cargo deflection, shipping fixture deflection, floor deflection).

7.5.2 Loads

A. The maximum running load applied to the floor rollers shall not exceed the values shown in Table 2.[25]

B. Refer to AOD 8594002, Appendix B.4, for the FS used for MS calculations.

7.5.3 48-Foot Cargo Pallet Interface

A. The 48-foot cargo pallet is comprised of a 36-foot section and a 12-foot section that are pinned together. These pallets can be separated and used independently, if required.

B. Loads applied to the pallet surface shall be concentrated within 14 inches of the pallet sides (see Figure 22). The load shall be concentrated as much as possible on pallet outer longitudinal c-channels.

C. See Figure 22 for the pallet tie-down capability. The loads shown in Figure 22 are the total vector sum allowable at the specified tie-down points.

D. Structures interfacing with the pallet shall have a surface flatness of 0.125 inches or less.

E. Refer to AOD 4094013, Super Guppy Boundary Condition Stiffness, for SGT floor stiffness and pallet chain tie-down design guidance.

7.5.4 MightyGRIP Cargo Pallet Interface[26]

A. The MightyGRIP cargo pallet is comprised of twelve 4-foot modular segments that are bolted together. The maximum length achievable is 48 ft. Segments may be removed to decrease flight weight or separated to create independent pallets, if required.

B. Loads shall be concentrated as much as possible on the outer side rails, as shown in DWG 40-0000061. Smaller payloads shall distribute weight across the seat tracks.

C. Refer to DWG 40-0000061 for the pallet tie-down capability. The loads shown are the total vector sum allowable at the specified tie-down points.

D. Structures interfacing with the pallet shall have a surface flatness of 0.125 inches or less.

E. Refer to AOD 4094013 for SGT floor stiffness and pallet chain tie-down design guidance.

---

[24] NASA prefers a 12-inch clearance, if possible, to avoid detailed payload deflection calculations.

[25] Contact NASA AOD Engineering for SGT floor stiffness and chain analysis guidance.

[26] See DWG 40-0000061.

7.5.5 Aircraft Floor Roller and Lock Pin Interface

Shipping fixtures designed to interface directly with the SGT floor rollers and lock pins (i.e., do not use a NASA-supplied pallet) shall meet the applicable design requirements outlined in this document in addition to the following:

A. Shall not exceed the SGT floor loads with payload installed (refer to Section 6.7, Cargo Floor Load Limits).

B. Shall meet the SGT design load factors with payload installed (refer to Section 6.8, Cargo Design Load Factors).

C. Shall have a surface flatness of 0.125 inches or less for the surfaces contacting the SGT floor rollers. Additionally, any substantive protrusions (e.g., weld beads, structural mismatch) on surfaces that contact the rollers or side rails shall be ground flush to allow for smooth translation.

D. Shall have a straightness of 0.125 inches or less over the length of the shipping fixture for surfaces contacting the SGT side rails (see Figure 14).

E. Shall have an overall width of 104.5 inches for the surfaces contacting the SGT rollers.

F. Shall be designed to consider differential thermal expansion issues that may affect lock pin hole alignment or loads.

G. Shall have provisions to interface with the SGT winch connection, such as the MightyGRIP winch clevis described in DWG 40-00000061.

H. Shall have provisions to tie down the shipping fixture to the cargo loader during transport to and from the aircraft (refer to Section 9.0, Cargo Loaders).

I. Shall have lift points to lift the shipping fixture and payload onto the loader.

J. Shall contact NASA for guidance on drilling the lock pin hole pattern (see Figure 22 and DWG 40-00000061).

K. Shall plan for test fit of shipping fixture in the SGT prior to initial move.

L. Shall provide a gradual lead-in on the forward and aft corners of the fixture.

7.5.6 Materials

A. Impact strength of materials subject to brittle transition at low temperatures shall be tested (refer to Section 6.9.1, Temperature).

- ASTM A500, Standard Specification for Cold-Formed Welded and Seamless Carbon Steel Structural Tubing in Rounds and Shapes – Charpy V-notch samples shall be required for the procured steel lot(s) and shall test ≥15 foot-pounds force (ft-lbf) (full size samples IAW ASTM A673, Standard Specification for Sampling Procedure for Impact Testing of Structural Steel) or equivalent (Table 1 in ASTM A673) at 0°F (-18°C).

- ASTM A572, Standard Specification for High-Strength Low-Alloy Columbium-Vanadium Structural Steel – Charpy V-notch samples shall be required for the procured steel lot(s) and shall test ≥15 ft-lbf (full size samples IAW ASTM A673) or equivalent (Table 1 in ASTM A673) at 0°F (-18°C).
- ASTM A500 and ASTM A572 welded joints – Charpy V-notch samples shall be required for the welded joints and shall test ≥15 ft-lbf (full size samples IAW ASTM A673) or equivalent (Table 1 in ASTM A673) at 0°F (-18°C). The V-notch shall be machined in the welded joint. Weld samples shall be required for each weld wire lot.

7.5.7 Weld Design

A. Safety critical aluminum welding shall conform to PRC-0001, Process Specification for the Manual Arc Welding of Aluminum Alloy Hardware, or industry equivalent.[27]

B. Safety critical steel welding shall conform to PRC-0005, Process Specification for the Manual Arc Welding of Carbon Steel and Nickel Alloy Hardware, or industry equivalent.[26]

C. All weld processes shall include a weld class call-out (e.g., Class A, Class B) on the drawing IAW PRC-0001 and PRC-0005, or industry equivalent.

D. Welds shall be designed as to not exceed the permissible stresses shown in Table 8. The permissible stresses shown in Table 8 intended to align with standard industry codes [e.g., AWS (American Weld Society), AISC (American Institute of Steel Construction)].

E. Weld procedures shall be approved by NASA prior to welding.

F. Welded joints shall be analyzed and presented in the stress report.

[27] See http://mmptdpublic.jsc.nasa.gov/prc/prclist.htm.

Table 8. Permissible Stresses for Welds[28]

Type of Loading	Type of Weld	Permissible Stress[a]	Effective Factors of Safety[d]
Tension	Butt	$0.60S_y$[b]	1.67_{yld}
Bearing	Butt	$0.90S_y$	1.11_{yld}
Bending	Butt	$0.60S_y$	1.67_{yld}
Simple Compression	Butt	$0.60S_y$	1.67_{yld}
Shear or Partial Joint Penetration (base metal)	Butt or Fillet	$0.40S_y$	1.44_{yld}
Shear or Partial Joint Penetration (weld metal)	Butt or Fillet	$0.30S_{ut}$[c]	2.50_{ult}

[a] For lift points, the permissible stress shall be divided by four for material yield strength (S_y) and by five for material ultimate tensile strength (S_{ut}). For materials sensitive to residual stresses from welding (e.g., titanium), the permissible stresses listed in Table 8 assume that the weldment has been stress-relieved.

[b] S_y represents the **as-welded** yield strength of the base metal. For example, the as-welded properties of many aluminum alloys have a lower yield strength following welding unless the weldment undergoes a post-weld heat treatment.

[c] S_{ut} represents the ultimate tensile strength of the filler metal.

[d] The factors of safety are calculated as follows:

Tension, Bending, Simple Compression $$FS_{yield} = \frac{1}{0.60} = 1.67$$

Bearing $$FS_{yield} = \frac{1}{0.90} = 1.11$$

Shear base metal$_{yield}$ $$FS_{yield} = \frac{0.577}{0.40} = 1.44$$

0.577 based on distortion energy theory shear failure criteria.

Shear weld metal$_{ultimate}$ $$FS_{yield} = \frac{1}{0.30} x0.75 = 2.50$$

0.75 is approximate ultimate shear strength of fillet material since S_{Ult} in factor of safety equation is based on ultimate tensile strength

Welds shall be designed to not exceed the permissible stresses in Table 8 The permissible stresses shown in Table 8 are intended to align with standard industry codes such as the American Weld Society (AWS) and the American Institute of Steel Construction (AISC).

For welds, the Margin of Safety is calculated based on the following equation:

$$MS_{yield\ (ultimate\ for\ 0.30Sut\ case)} = \frac{Permissible\ Stress\ (from\ Table\ 8)}{Calculated\ Stress} - 1$$

An additional FS (e.g., FS=1.5) is not required in the denominator of the above calculation since the permissible stresses listed in Table 8 already include the appropriate safety factor.

[28] Refer to AOD 8594002 for more information.

7.5.8 Environment

A. The cargo bay is completely unpressurized and unheated/cooled. Typical cargo bay temperatures can range from 0°F to 150°F (-18°C to 66°C) depending on the airfield location and time of year.

B. Differential thermal expansion shall be considered for shipping fixture designs. For example, the differential thermal expansion for a 288-inch long steel structure interfacing with the SGT aluminum pallet will be 0.020 inches for every 10°F (-12°C) change in cargo bay temperature.

7.5.9 Pressure Systems and Sealed Containers

A. Payloads that contain pressure systems or sealed containers shall be evaluated IAW JPR 1710.13, Design, Inspection, and Certification of Ground-Based Pressure Vessels and Pressurized Systems.

B. If required, NASA will generate an OCCP with customer design and analysis input IAW SOP-009.98, Preparation of an Operation & Configuration Control Plan (OCCP) for "Category B" Pressure Vessels/Systems (PV/S).

C. The maximum descent rate to be used in venting calculations shall be 3,000 ft/min.

7.5.10 Hardware and Equipment

A. Fasteners shall include a locking feature. Lock nuts are preferred over lock washers.

   1. If applicable, limits for reuse of locking hardware shall be considered.

B. Safety critical hardware (i.e., fasteners, lift/tie-down rings) require material certification paperwork.

7.5.11 Flame Retardant Materials

A. Any materials exposed to possible ignition sources shall be flame retardant IAW FAR 25.853, Compartment interiors, Appendix F, (a)(i), or equivalent. Refer to AOD 8594002, Section 2.2, Material Safety, for guidance.

B. Any materials (including, but not limited to shrink wraps) used to cover a payload shall conform to NFPA 701, Standard Methods of Fire Tests for Flame Propagation of Textiles and Films, or equivalent.

7.5.12 Batteries

A. Any batteries carried in the aircraft shall be reviewed by NASA and determined to be safe for flight based on cargo bay pressure and temperature range.

B. Batteries in the cargo bay shall not be actively charged or discharged during transportation.

C. Batteries with potential for toxic venting (such as NiCd) are not permitted in Cabin/Crew areas.

D. Lithium batteries located in Cabin/Crew areas shall conform to 49 CFR 173.185.

E. For batteries located in the Cargo Bay, battery state of charge shall be verified and documented prior to payload onloading. JSC-20793 or 49 CFR will define the permissible battery state of charge depending on the document used for approval.

F. Batteries conforming to JSC-20793 & JSC-63322 can be considered conditionally approved for flight but documentation will need to be provided for review.

G. Consumer-grade, Commercial off-the-shelf (COTS) batteries are generally approved for flight. (generally, ~100 Wh and below)

H. Loose (uninstalled) batteries shall be packaged and secured to be protected from damage.

I. Batteries not meeting requirements herein or that are outside of the 49 CFR limits will require further engineering evaluation and approval from NASA. Additional documentation will need to be provided.

J. Use the smallest size (minimum capacity) battery suitable for intended application, thus minimizing stored energy and electrolyte quantity.

K. Battery installations must withstand reduced pressures at altitude, normal aircraft structural loads and safely contain battery failure modes. Typical failure modes include cell rupture or explosion and cell overheating.

L. Battery containment: Battery containment and protection from mechanical abuse or battery manufacturing defects must be implemented to the level appropriate for the specific battery chemistry and installation specifics. For example, for Lithium-ion battery packs, overheating, fire, and explosion may result when the cells are damaged and are the primary concerns for containment design. However, for legacy liquid electrolyte batteries such as NiCd or NiMH, which may still see limited application in very narrow circumstances, failures may yield corrosive fluids and require a secondary battery enclosure to contain electrolyte should there be a leak. All battery containers shall be properly vented to

   a. accommodate rapid changes in cabin pressurization,
   b. prevent the accumulation of explosive gasses, and
   c. prevent battery overheating.

M. Use a fuse or circuit breaker as close to the battery pack as possible.

N. Minimize hazards due to cell failure through use of isolation and/or bypass diodes, thermal cut out switches, electrolyte resistant wire insulation, etc.

O. Label battery housings with applicable safety warnings (such as corrosive/caustic liquid, flammable gas, high voltage or current capability).

P. Unattended battery charging on the aircraft is not allowed. Battery must be isolated when not in use. Battery approval is dependent upon the total aircraft mission configuration and assessed risk level for all potentially hazardous items on board.

Q. Approval will be for a particular mission series. Complete vendor battery specification and material safety data sheets must be submitted along with application information for AOD Engineering review and approval action. AOD Engineering approval will be required to allow unattended or overnight operation of battery-powered equipment in the aircraft.

7.5.13 Uninterruptible Power Supplies

The structural integrity and circuitry guidelines above also apply to UPS batteries. All units will be subjected to safety inspection and battery handling procedures. The following specific requirements will be inspected:

A. A readily accessible emergency shutoff that disables all output power from the UPS shall be implemented.

B. A Safety Data Sheet (SDS) must be supplied for the battery.

C. The battery must be a sealed lead acid (SLA) type with immobilized electrolyte. Non-SLA batteries may be approved in only two circumstances:

   a. If mission objectives are not achievable with a non-SLA battery pack.

   b. If the user can demonstrate a history of manufacturing quality and reliability for the constituent cells, and show adequate circuit protection for the cells and battery as a whole is present. For guidance on specific safety considerations in different battery chemistries, reference JSC 20793.

D. COTS UPS containment of SLA batteries is acceptable. Reference section 7.5.13 C. and battery containment guidance for more information on non-SLA requirements.

E. If the battery or battery interface to the UPS is not designed by the end user, the battery must be within its valid shelf life, and the final wiring must be installed at JSC with an aircraft inspector witness. If the battery is of the type that requires periodic maintenance, adequate documentation must be presented that traces the last battery installation date and subsequent UPS use and maintenance history.

F. If the battery was installed before arrival to JSC, the unit will be subject to a "covers removed" inspection for general workmanship and compliance with wiring requirements, containment, and isolation systems.

G. Along with an SDS for the battery, a copy of the owner's manual for the UPS must be provided. Provide circuit schematics detailing the battery/UPS interface, if available.

7.6 HAZARDOUS MATERIALS

Payloads containing hazardous materials which meet or exceed the requirements of approved NASA program safety requirements such as NSTS 1700.7, Safety Policy and Requirements for Payloads Using the Space Transportation System, or NSTS-1700.7 (ISS Addendum), Safety Policy and Requirements for Payloads Using the International Space Station, will be eligible for transportation on the SGT. The safety assessment reviews delineated in NSTS 1700.7, Chapter 3, System Program Requirements, Paragraph 304, Safety Assessment Reviews and Safety Certification, shall have been completed by the appropriate cognizant organization and associated safety compliance data package submitted four weeks prior to shipment, including any differences between in-flight monitoring requirements and any resulting ground handling/transportation flight safety devices required.

Hazardous cargo not destined for spaceflight shall be subject to safety criteria in NPR 6200.1, NASA Transportation and General Traffic Management. Waivers of this requirement can only be granted by NASA management.

Some examples of hazardous material/items are (this list is not all-inclusive):

- Flammable or Toxic Fluids
- Batteries
- Explosive or Pyrotechnic Devices
- Pressure Systems
- Charged Electrical Systems

7.7 NASA AIRWORTHINESS REVIEW

NASA has an airworthiness process that must be completed prior to flight. This review examines analyses, drawings, and other documentation to determine the system's readiness for a safe and successful flight. The airworthiness review is usually held 1–2 weeks before the flight, depending on payload readiness. Customers shall provide the items listed in Table 9 as early as possible, but no later than four weeks prior to the airworthiness review date provided by NASA.

Table 9. Airworthiness Review Requirements Matrix

Item	Title	Notes
1	Stress Analysis Report (including thermal analysis and weld analysis, if applicable)	Shall be signed by the customer and in a comprehensive, reviewable format. Refer to AOD 8594001 for stress report preparation guidance and expected content. PowerPoint presentations are not encouraged.
2	Payload Configuration Drawings	Step 1: Shall be provided to NASA for review prior to fabrication. Step 2: Shall be signed and formally released prior to airworthiness review.
3	Welding Procedures and Inspection Reports of Safety Critical Areas	Weld procedures shall be approved by NASA prior to welding. Final weld inspection reports shall be provided to NASA following welding.
4	Material Test Reports and Certifications	For safety critical materials and hardware.
5	Quality Sign-off	Confirms the as-built hardware configuration matches the design. Ensures fasteners are torqued to specified values.
6	Measured Weight and CG	x, y, z, and CG located relative to pallet lock pin hole #1. Use AOD Form 424.
7	OCCP for Pressure Systems or Sealed Containers (if required)	Prepared by NASA with design and analysis input from customer.
8	Payload Installation Checklist	Prepared by NASA with installation procedure input from customer.
9	Support Equipment List	Smaller items to be shipped with the payload that support the payload (i.e., emergency equipment or an environmental control system). The customer shall provide dimensions and weight for each item.
10	Operations Risk Analysis	Mitigation plan for hazardous items identified in Section 7.6 Hazardous Materials. May include ground or flight testing (i.e., of data acquisition or environmental control systems).

7.8 REPEAT AIRLIFTS

7.8.1 Payload Questionnaire Form

Repeat airlifts will have most of the items in Table 9 completed from previous efforts. However, the airworthiness documentation listed in Table 9 shall be resubmitted for each airlift iteration. Any changes in payload configuration must be communicated to NASA at the earliest opportunity while in coordination for subsequent airlifts. Analyses, drawings, installation checklists, and other pertinent documentation that have been revised since the initial delivery to NASA will be reviewed to ensure that flight readiness of the payload has not been altered. Changes in configuration may require the scheduling of an additional Airworthiness Review to receive authorization to proceed.

7.8.2 Quality Documentation

Quality documents with customer signature/stamps shall be resubmitted for each airlift for safety critical fasteners, modified structures, and added components.

7.8.3 Recurring Inspection Plan

Pallets, tooling, and support structures shall be in airworthy condition and must be verified prior to each airlift by the customer and reviewed by NASA.

8.0 SUPPORT EQUIPMENT

8.1 PALLETS

8.1.1 48-Foot Cargo Pallet

The 48-foot cargo pallet (see Figure 22), used to secure cargo and interface with the aircraft, is constructed of aluminum and can be unpinned and separated into two sections: front (36 ft) and rear (12 ft) (refer to Table 10 for specifications). The cargo pallet has a pattern of threaded holes to accept tie down rings on approximately 24-inch squares, and lock pin holes that are spaced every 12 inches on each side that mate with the aircraft lock pins to secure the pallet to the aircraft.

NOTE

NASA has one 48-foot cargo pallet in inventory.

The 48-foot cargo pallet is constructed of an aluminum framework with an aluminum skin. Payload interfaces shall be designed to transfer loads through the main pallet framework and avoid placing loads on unsupported aluminum skin sections.

Many payloads can be shipped on the 48-foot cargo pallet. Generally, cargo of nominal size, not exceeding the width of the pallet, can be tied down directly to the pallet. For shipment of outsized components, adapters of various heights can be bolted or chained to the pallet (refer to Section 8.3 Adapters). The cargo is then mounted onto the adapter at a level to fit the wider portion of the aircraft fuselage.

To lift the pallet, such as to facilitate ground transportation, the 36-foot and 12-foot cargo pallet sections must be unpinned and lifted independently. See DWG 4091547, Lift Plan, 36-Foot Pallet Assembly, and DWG 4091548, Lift Plan, 12-Foot Pallet Assembly, for the pallet lift plans.

Table 10. 48-Foot Cargo Pallet Specifications

Item	Value
Length	576 inches
Width	104.5 inches
Weight	2,015 lbs
Maximum Total Load (including pallet weight)	46,000 lbs
Outboard Tie-Down Ring (Large)	10,000 lbs[29]
Inboard Tie-Down Ring (Small)	5,000 lbs

[29] Limited by 10,000 lbs chain capacity. Outer pallet rows A and D can be increased to 15,000 lbs under certain conditions.

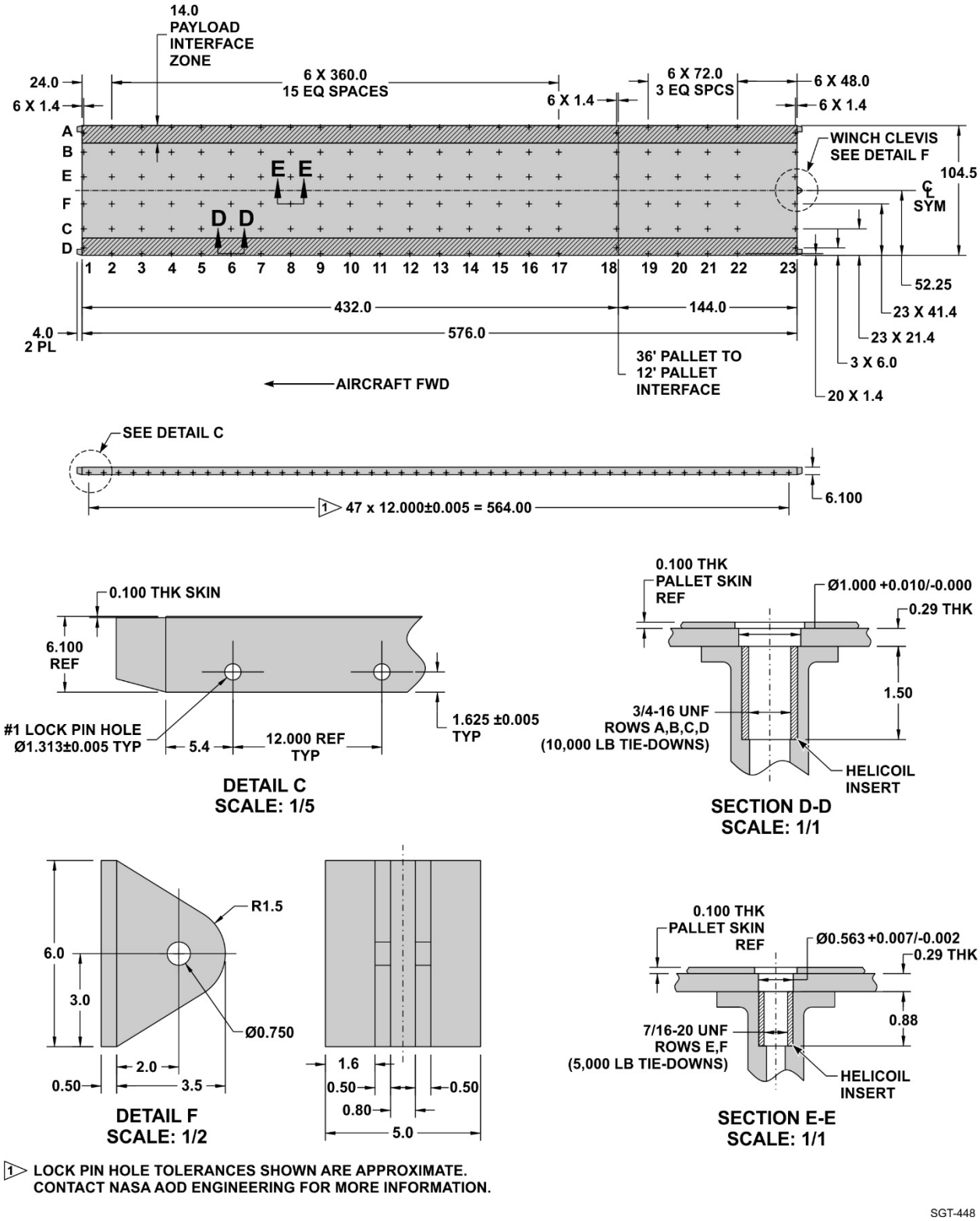

Figure 22. 48-Foot Cargo Pallet[30]

[30] See DWG 4000003.

8.1.2 8-Foot Cargo Pallet

The 8-foot cargo pallet (see Figure 23) has lock pin holes every 12 inches that interface with restraint pins and aircraft rollers to secure the pallet during flight (refer to Table 12 for specifications). These pallets can be used alone or in combination with the 48-foot cargo pallet (space permitting) for payload moves (e.g., the 8-foot cargo pallet has been used in the past to support environmental control units with larger payloads installed on the 48-foot cargo pallet).

NOTE

NASA has three 8-foot cargo pallets in inventory.

The 8-foot cargo pallet is an aluminum structure 96 inches long × 104.5 inches wide × 12.5 inches high and weighs approximately 760 lbs. Threaded tie-down holes (i.e. tie-down ring receptacles) are located on the top surface to secure cargo to the pallet.

The 8-foot cargo pallet is constructed of an aluminum framework with an aluminum skin. Payload interfaces shall be designed to transfer loads through the main pallet framework and avoid placing loads on unsupported aluminum skin sections (refer to AOD 4091540, 8-Ft Pallet Assembly, Cargo, Super Guppy, for detailed information).

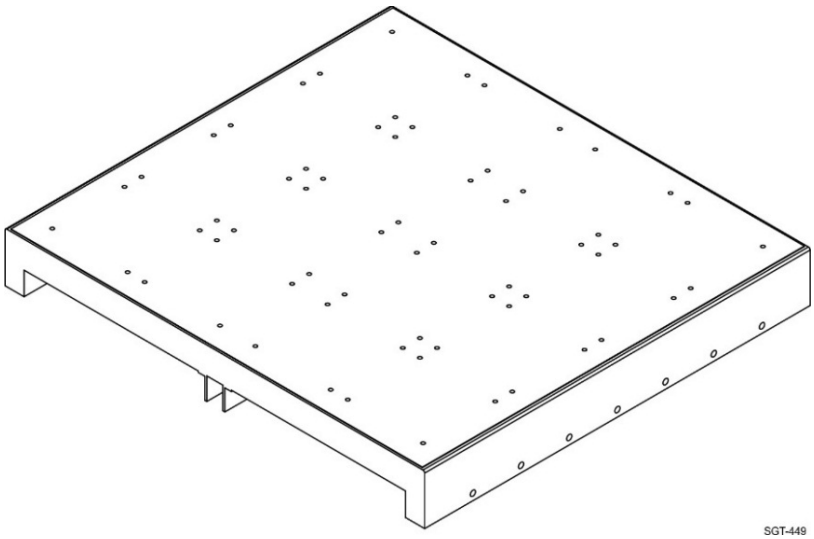

Figure 23. 8-Foot Cargo Pallet[31]

Table 11. 8-Foot Cargo Pallet Specifications

Item	Value
Length	96 inches
Width	104.5 inches
Weight	760 lbs
Maximum Total Load	5,000 lbs
Tie-Down Ring Capacity	5,600 lbs (any direction) 10,000 lbs (62 degrees to 90 degrees measured from pallet surface)[32]

[31] See DWG 4091540.

[32] Refer to AOD 4094015, 8-Foot Pallet Tie-Down Load Allowable.

8.1.3 MightyGRIP Cargo Pallet

The MightyGRIP cargo pallet (see Figure 24) consists of 12, 4-foot modular sections, which can be bolted together to create a 48-foot assembly (refer to Table 13 for specifications). The pallet can accommodate multiple payloads simultaneously and enables multiple methods for integrating, bolting, and chaining. Segments can also be removed to reduce weight, with each segment weighing approximately 250 lbs. Each segment has threaded holes to accept tie down rings, with four locations every 2 ft. Lock pin holes are spaced every 12 inches along each side that mate with the aircraft lock pins to secure the pallet to the aircraft.

The load is distributed primarily through the base rails (see Figure 24). Seat tracks along the cross beams provide a flexible way to tie down light equipment or boxes. The deck panels are provided as a walking surface but are not designed to support items during flight.

NOTE

NASA has one MightyGRIP cargo pallet in inventory.

Generally, cargo of nominal size, not exceeding the width of the pallet, can be tied down directly to the pallet. For shipment of outsized components, adapters of various heights can be bolted or chained to the pallet (refer to Section 8.3, Adapters). The cargo is then mounted onto the adapter at a level to fit the wider portion of the aircraft fuselage.

To lift the pallet, such as to facilitate ground transportation, the segments must be bolted together and lifted at specific tie down points. See DWG 40-0000057, Lift Plan, MightyGRIP Pallet Assembly.

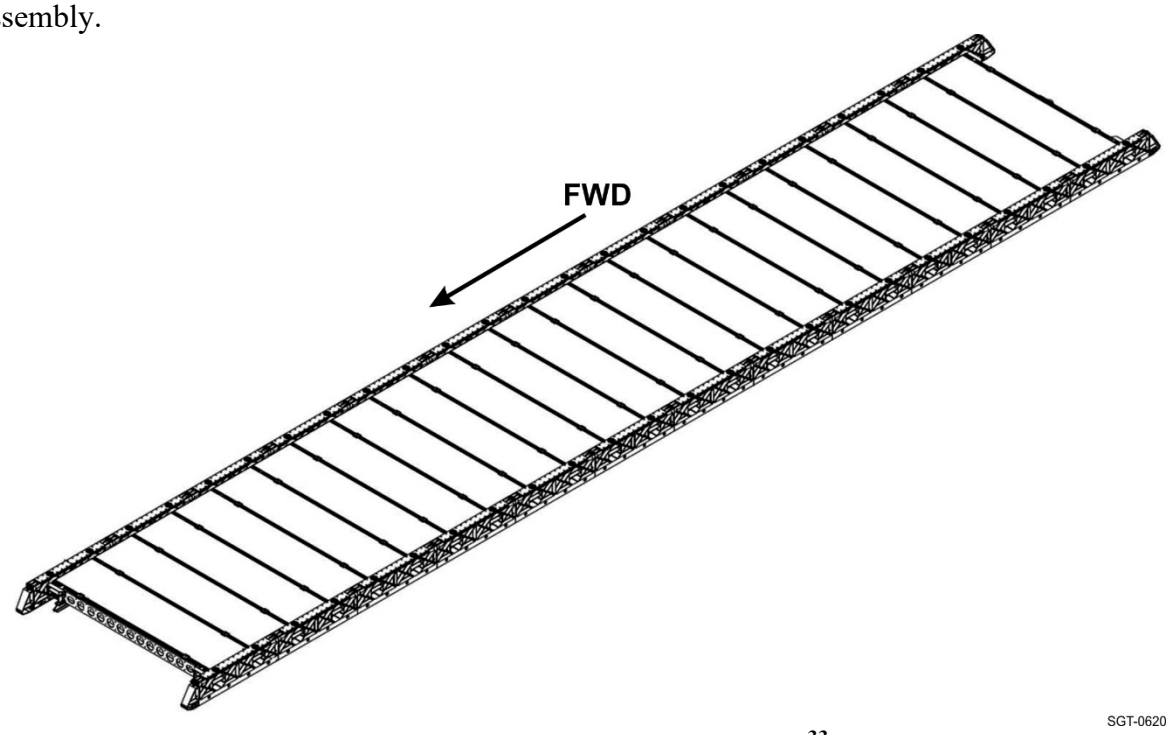

Figure 24. MightyGRIP Cargo Pallet[33]

[33] See DWG 40-0000061 for dimensions and interface requirements.

Table 12. MightyGRIP Cargo Pallet Specifications

Item	Value
Length	576 inches (bumpers not included)
Width	104.5 inches
Weight	2,771 lbs
Maximum Total Load (including pallet weight)	48,000 lbs
Outboard and Inboard Tie-Down Rings	10,000 lbs[34]

8.2 CARGO RESTRAINT HARDWARE

NASA-provided tie-down rings, cargo chains, and chain tensioning devices are typically used in conjunction with the pallets to secure cargo.

A. Cargo Chains

Chains conform to MIL-DTL-6458G Type I (MB-1) and are rated at 10,000 lbs maximum working load.

B. Tie-Down Rings

Tie-down rings conform to NAS1251 and have load ratings as follows:

1. 48-Foot Cargo Pallet
   - Outboard Tie-Down Holes – NAS1251A25 (limited to 10,000 lbs maximum chain working load)
   - Inboard Tie-Down Holes – NAS1251-5 (5,000 lbs maximum working load)
2. 8-Foot Cargo Pallet – NAS1251A25 (limited to 10,000 lbs maximum chain working load)
3. MightyGRIP Cargo Pallet – NAS1251A25 (limited to 10,000 lbs maximum chain working load)

C. Chain Tensioners

The chain tensioning devices conform to MIL-DTL-25959H Type III (MB-1) and are rated at 10,000 lbs maximum working load.

[34] Limited by 10,000 lbs chain capacity.

8.3 ADAPTERS

Cargo adapters can be used when necessary to elevate cargo to take advantage of a wider portion of the cargo bay. Several adapters are available, or custom adapters can be created for specific cargo. See Figure 25 for an example of the adapter structure.[35]

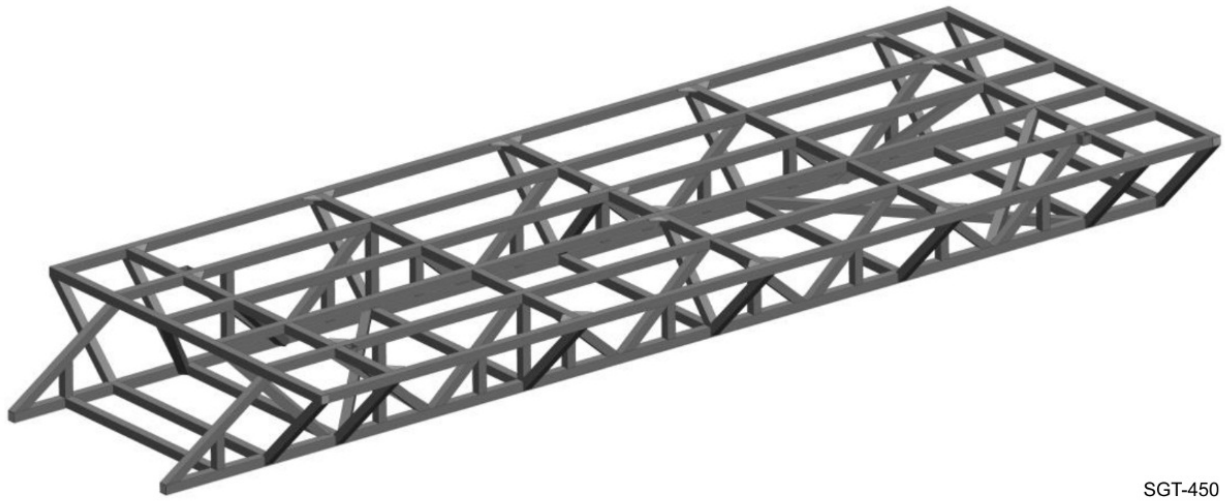

Figure 25. Adapter Weldment Assembly

The MiniGRIP was designed to be a simplified, lightweight adapter for transporting the Orion Heatshield. This adapter offers mass savings, requires fewer chains, and reduces wear on the pallet. The MiniGRIP cargo adapter weighs approximately 1,700 lbs, whereas the adapter shown in Figure 25 weighs approximately 4,800 lbs. Figure 25 shows the MiniGRIP cargo adapter with the heat shield payload and the adapter (by itself) installed on the 48-foot cargo pallet.[36]

[35] See DWG 4091537, Adapter Weldment Assembly.

[36] Contact AOD Engineering for guidance on adapter options and selection.

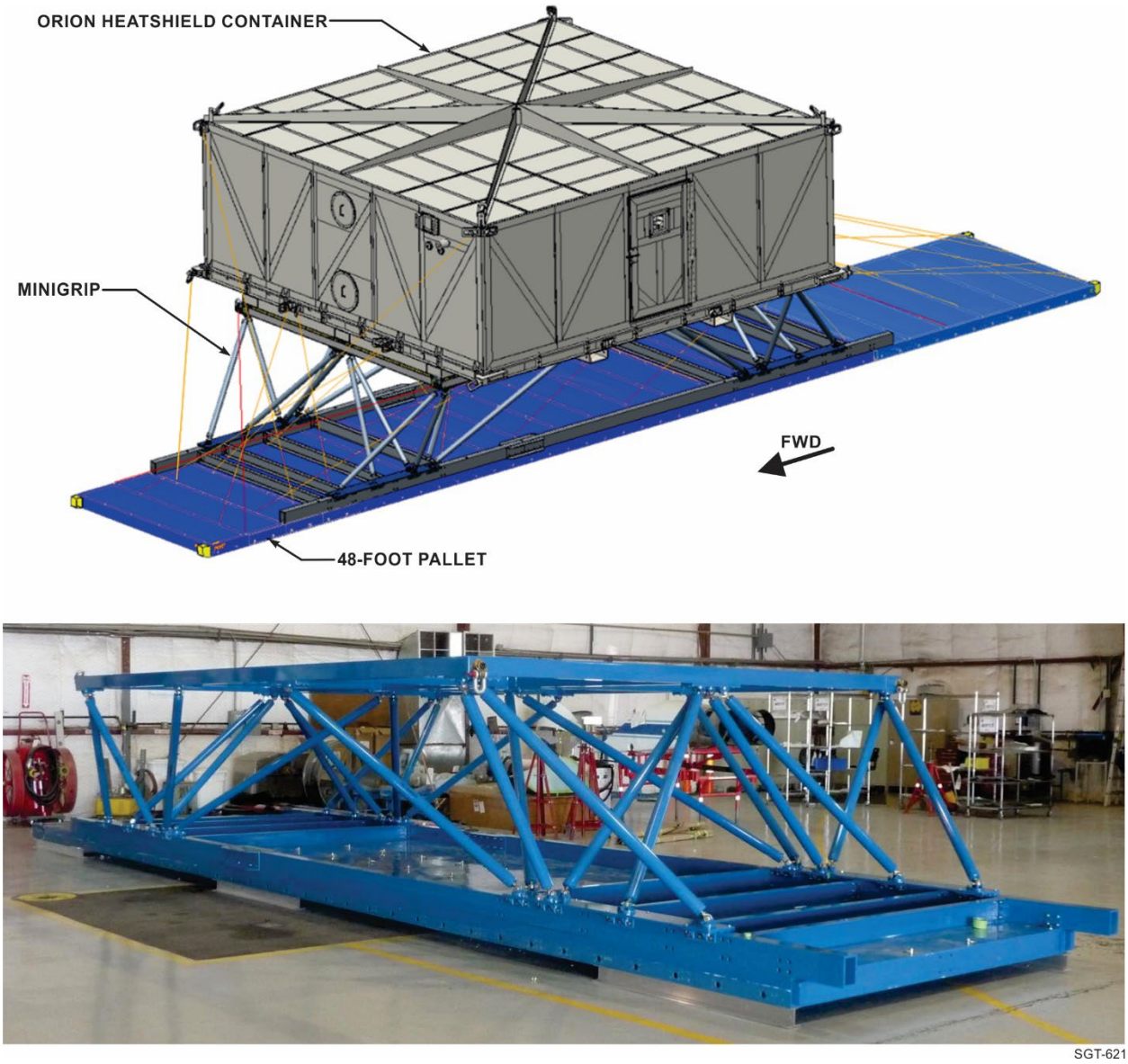

Figure 26. MiniGRIP Cargo Adapter Installed on 48-Foot Cargo Pallet

9.0 CARGO LOADERS

During a typical airlift mission, cargo loaders are pre-positioned at the departure and destination airfields. There are several different types of loaders that can be used including the Cargo Lift Trailer (CLT), Rescue Loader, and United States Air Force (USAF) Tunner cargo loaders. The CLT and Rescue Loader are NASA assets, while the Tunner is a USAF asset that can be arranged as necessary.

For payloads with high vertical CGs or large surface areas, a Tip-Over Analysis is required. The tip over analysis will consider the payload bottom surface at the highest elevation on the loader deck, which is 12 feet. Further details of the Rescue Loader and CLT CGs and weights are provided in Table 13.

Table 13. CLT and Rescue Loader Mass Properties[37]

Loader	Weight	Width
Rescue Loader	38,316 lbs	145.7 in
CLT	53,000 lbs	186.6 in

The Super Guppy is typically on- or off-loaded only during daylight hours. Weather conditions may restrict or prevent operations. The Flight Engineer and Loadmaster are responsible for determining if conditions will allow for safe operations. Wind limitations are typically 30 mph but may be decreased based on cargo loader usage, payload surface area, CG location, or additional factors. Refer to Section 10.2 for further guidance.

Any deviation from nominal operations with the Cargo Loaders must be approved by the Safety Office.

9.1 CARGO LIFT TRAILER

The CLT (see Figure 27) is a scissor type heavy lifting trailer that transports the pallet/payload short distances to the SGT's location. It is towed/pushed short distances using a tug[38] and moves at no greater than 5 miles per hour (mph). The CLT is a welded steel structure that transports and lifts cargo weighing up to 55,000 lbs that is outfitted with a roller/rail system that matches the SGT. The CLT functions using a hydraulic system with hydraulically operated stabilization struts powered by a diesel engine. Hydraulic power is used for leveling the trailer, elevating the platform, and steering the front and rear wheel units. Electrical power is provided by a 12 VDC battery/generator system used for starting the engine and for remote control of hydraulic solenoid valves. The parking brake and suspension air supply come from an engine-driven air compressor and reservoir installed on the CLT.

The CLT is capable of being partly disassembled and transported by semi-trailer to distant airports when the need arises. This is accomplished first by removing the CLT outboard wheels. The CLT chassis is then placed on the bed of the semi-trailer and secured. The wheels are secured to another semi-trailer for shipment. When the CLT is loaded on the trailer, the shipment is 13 ft, 8 inches wide, which is an oversize load that requires extra travel time enroute. This should be taken into consideration when positioning equipment for permits, as well as loading and unloading. Refer to Table 14 for CLT specifications.

[37] Please contact NASA for vertical CG information of the loaders.

[38] Tug must be capable of pushing or pulling a load of approximately 102,000 lbs.

Table 14. Cargo Lift Trailer Specifications

Item	Value
Length	581 inches
Width/Track (tires installed)	187 inches
Width (outside tires removed)	164 inches
Width (platform)	129.5 inches
Height (full raised deck position)	154.75 inches
Height (full down deck position, with air suspension)	63 inches
Height (full down deck position, without air suspension)	57.75 inches
Weight	53,000 lbs
Cargo Carrying Capability	55,000 lbs
Maximum Towing Speed	5 mph
Brakes	Air
Propulsion	Towed at either end
Steering	Hydraulic, both ends
Minimum Turning Radius	193 ft
Number of Tires	16
Tire Size	255/70R 22.5
Tire Type	Highway/5 plies – one ply sidewall
Wheel Loads	40,560 lbs front 40,560 lbs rear (5,070 lbs per wheel)

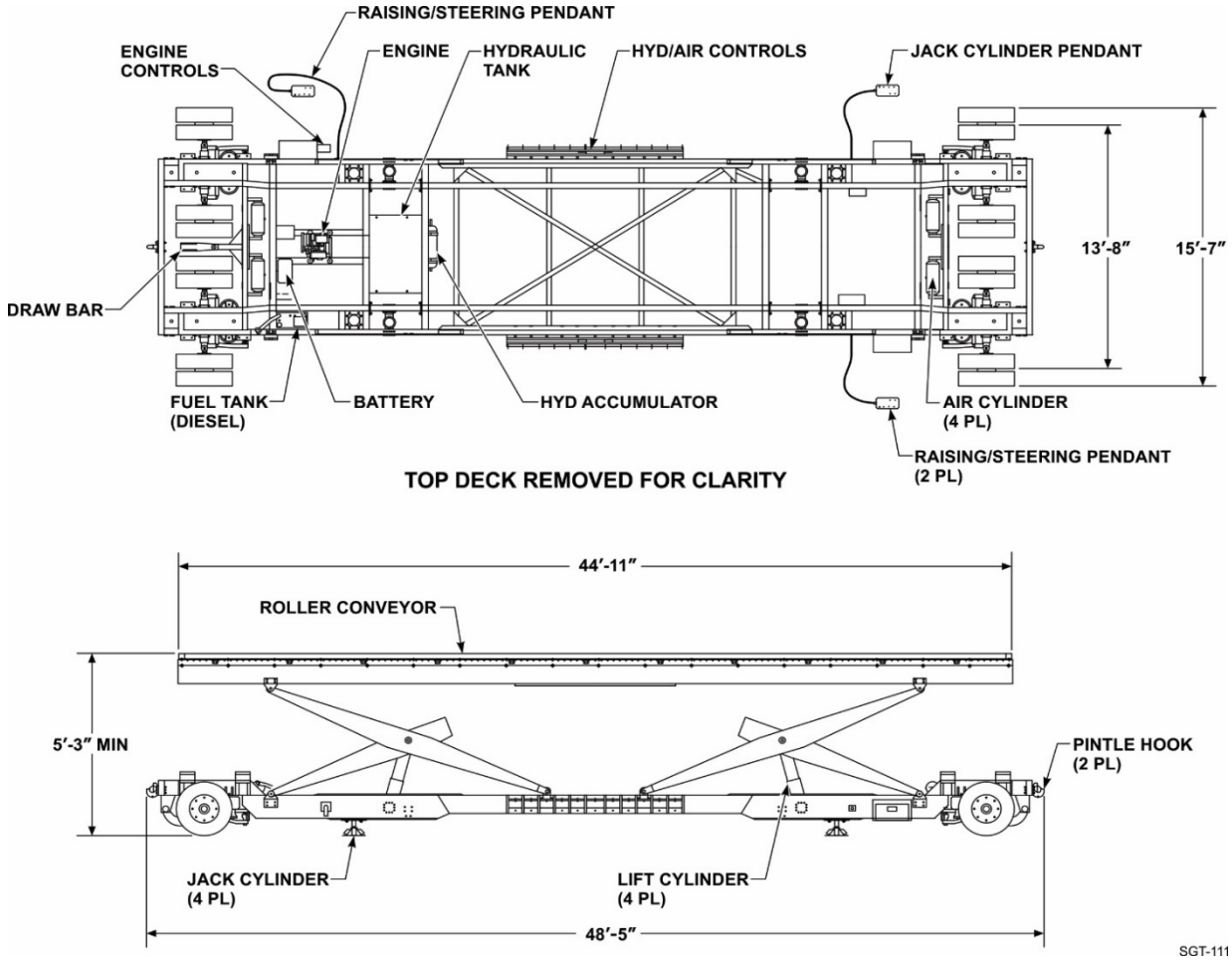

Figure 27. Cargo Lift Trailer

9.1.1 Additional CLT Considerations

The CLT cargo deck deflects when loaded; up to 3.0 inches of deflection has been observed at the center of the cargo deck when loaded (see Figure 28). The customer shall consider this 1G load case for their payload to determine if any detrimental and unacceptable stresses or deflections may occur. The worst-case scenario to be considered is a simply-supported beam with a 35-ft span.

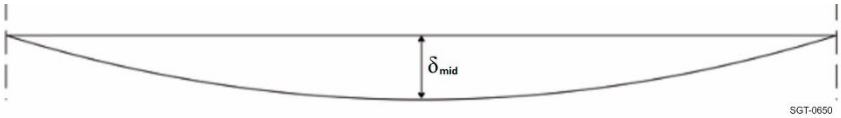

Figure 28. Maximum Observed Deflection of CLT Deck Under Load

9.2 RESCUE LOADER

The Rescue Loader (see Figure 29 and Figure 30) is a NASA asset that can transport loads up to 55,000 lbs to and from the aircraft. The Rescue Loader is self-propelled (i.e., does not require a tug to be moved), and raises and lowers a load using a hydraulically actuated system.

The Rescue Loader is capable of being partly disassembled and transported by semi-trailer to distant airports when the need arises. When the Rescue Loader is loaded onto a trailer, the shipment is approximately 12 ft, 2 inches wide, which is an oversize load that requires extra travel time en route. This should be taken into consideration when equipment is being positioned for permits and loading and unloading. Refer to Table 15 for Rescue Loader specifications.

Table 15. Rescue Loader Specifications

Item	Value
Length	619.3 inches
Width	145.67 inches
Height (full raised position, top rail)	204.5 inches
Height (full raised position, top roller)	196.5 inches
Height (full down position)	59.06 inches
Minimum Turning Radius (front wheels turned only)	708 inches
Minimum Turning Radius (front and rear wheels turned)	433 inches
Weight	39,672 lbs
Cargo Carrying Capability	55,000 lbs

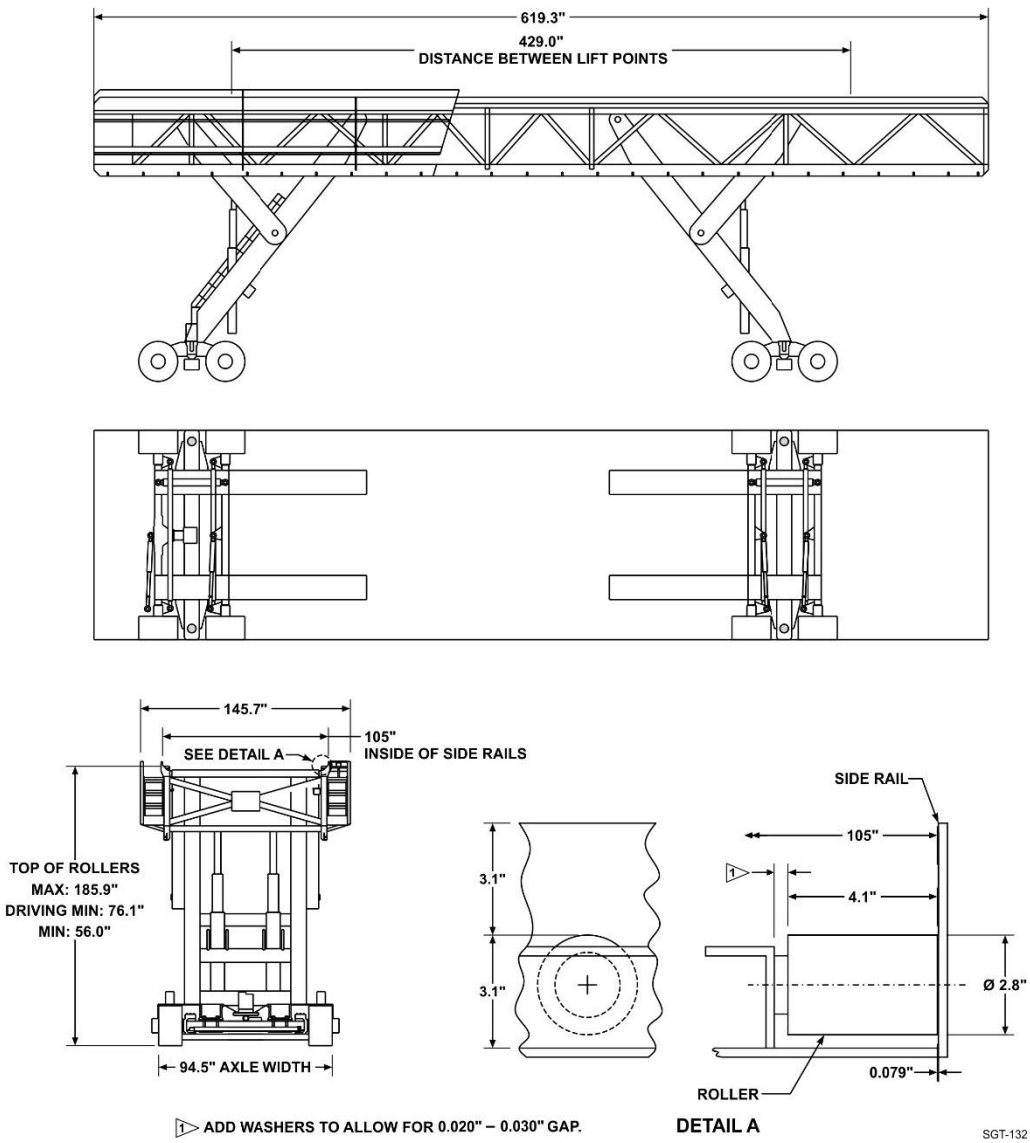

Figure 29. Rescue Loader

SGT-451

Figure 30. Rescue Loader with Cargo

10.0 FLIGHT COORDINATION

10.1 AIRCRAFT SUPPORT

The primary aircraft support requirements are fuel, a tow tractor, an external power cart, and an air start unit.

- Fuel – The type of fuel required is JP-8, Jet-A, or JP-5. The flight crew will normally provide its own maintenance team; however, support commonly referred to as "transient maintenance" may be used, if available.
- Tow Tractor – The aircraft may require a tow tractor depending on availability and location of taxiways and ramp space. The tow tractor must be capable of pulling the aircraft with a ramp weight of approximately 171,000 lbs. The grade of the terrain over which the aircraft will be towed should be considered when sizing the tug.
- External Power Cart – The aircraft will require an external power cart (Hobart or equivalent) to provide 28 VDC power. When carrying environmentally controlled payloads, provisions must be made to continuously power the aircraft on the ground.
- Air Start Unit – The aircraft requires an air start unit (USAF Type A/M32A-60A or equivalent) capable of a minimum output pressure of 35 pounds per square inch (psi).

10.2 AIRFIELD CONSIDERATIONS

AOD will work with the customer to define acceptable runways and determine the feasibility of the aircraft landing and takeoff from both the loading and unloading site. The information required on the runway(s) and taxiway(s) includes the following:

- Runway Width and Length
- Type of Surface
- Altitude
- Specific Hazards
- Taxiway Width
- Taxiway Surface
- Runway and Taxiway Bearing Capacity
- Known Obstructions (e.g., fence openings, fence height)

The required runway length is a function of takeoff weight, altitude, and outside air temperature. The minimum runway length for ideal conditions (light takeoff weight, sea level and moderate temperature) is approximately 7,000 ft. In most circumstances, a 10,000 ft runway is sufficient.

Adequate ramp space is required for parking, loading, and unloading the aircraft. The ramp space should be as level as possible to facilitate nose opening and loading operations. The bearing strength of the ramp and taxiway should be sufficient to support the aircraft weight of approximately 171,000 lbs, with a footprint of 175 psi maximum.

The SGT has widely spaced main landing gear (48 ft), and as such requires sufficiently wide taxiways. A 50 ft taxiway may be appropriate for towing the aircraft, but a minimum of 75 ft taxiway width is recommended for when the aircraft is under its own power. These guidelines are not always sufficient given other unique airfield factors; consequently, AOD will assist with airfield selection.

Prevailing weather conditions at the loading and unloading sites should be considered for the time period that these operations are expected to be performed. Particular attention should be paid to wind, snow, and ice conditions (i.e., in-flight icing, ground deicing). En route weather problems are the responsibility of the flight crew.

A desired aircraft loading time will be established early in the flight planning schedule; this time will be adhered to as closely as equipment and weather permit.

NOTE

Early morning wind conditions generally control the loading times.

As the actual time for aircraft arrival at the loading site nears, NASA will update the specific arrival time. For both aircraft loading and unloading, the aircraft is typically positioned so that the left wing points toward the direction of the prevailing wind so that wind loads are reduced on the nose when it is opened (see Figure 7). The maximum wind speed allowed for nose opening is 30 mph (26 knots) with approval by the flight crew based on a real-time assessment of airfield and weather conditions. The forecast for winds and weather must be verified prior to opening the nose to ensure that the 30 mph (26 knots) limit will not be exceeded while the nose is open.

10.3 EN ROUTE STOPS

Stops en route may be required to refuel the aircraft or rotate the flight crew. The flight crew will determine the most suitable airfields for this purpose. The number of fuel stops required is a function of maximum allowable takeoff weight and the payload weight; heavier payloads operating out of high-altitude airports will require more fuel stops. If the customer desires a specific stop en route, this should be specified early in the flight planning schedule to enable the flight crew to evaluate the location.

10.4 SPECIAL PAYLOAD REQUIREMENTS

Any special requirements during loading, transport, or unloading of the payload will require coordination to determine the availability of the requested support in the aircraft. These may include special environmental or power provisions based on payload requirements.

11.0 AIRLIFT PROCESS, ROLES, AND RESPONSIBILITIES

This section provides information about the airlift process as well as the specific responsibilities for both NASA and SGT customers. Official requests for use of the SGT transportation system shall be submitted to the SGT Program Manager.[39]

11.1 THE AIRLIFT PROCESS

Once initial conversations have started, NASA will provide the potential customer with the following initial Super Guppy Data Package:

- Super Guppy User's Guide
- Drawings and CAD/FEM models of the following:
  - The Super Guppy cargo volume (CAD model only)
  - Pallets and other fixtures as required
  - MightyGRIP and Super Guppy Floor Finite Element Model
- AOD Form 429, Super Guppy Payload Questionnaire Form

Upon request for further information, NASA will provide documents relating to temperature, vibration, and dynamic environments within the Super Guppy cargo bay.

[39] See https://www.nasa.gov/specials/jsc-aircraft-ops/guppy.html#contact

Using the Payload Data Package Form, information and related documents shall be provided to NASA by the dates listed to ensure all items are addressed prior to the Airworthiness Review. As documents are revised, the Payload Questionnaire Form shall be updated and provided to NASA with the appropriate document revisions.

NOTE

A checklist for airlift planning and role definitions is provided in Appendix B.

11.2 NASA RESPONSIBILITIES

AOD has the overall responsibility for the scheduling, mission planning, airworthiness, and detailed logistics planning for SGT missions. This responsibility entails the direction and scheduling necessary to ensure the safe and expeditious arrival of cargoes at destinations. This includes call-off authority for situations related to safety and weather. Aircraft loading, unloading, and in-transit care of the cargo are the joint responsibility of both AOD and the customers.

The procedures outlined in this section are applicable to all customers, including users other than NASA. The AOD organization/person receiving the customer request for use of the aircraft will forward copies of all documentation to the SGT project pilot and the AOD Engineering Branch.

11.2.1 Flight Crew

AOD is responsible for providing the flight crew, which typically includes a pilot, a copilot, two FEs, and a loadmaster.

11.2.2 Ground Crew

AOD personnel perform all aircraft maintenance. NASA is responsible for the personnel required to load and unload the aircraft.

11.3 CUSTOMER RESPONSIBILITIES

Customers are responsible for the following actions:

- Identifying the cargo and estimated move dates.
- Identifying the desired departure and arrival airfields and assist NASA in identifying available aircraft support at these locations.
- Providing a cargo-specific shipping fixture for the aircraft.[40]
- Providing cargo specific environmental control, if required.
- Providing all airworthiness items identified in Section 7.7, NASA Airworthiness Review.

[40] NASA will provide design guidance as required.

11.3.1 Customer Flight Support Personnel

Due to the extensive modification of the SGT, NASA does not recommend that customer personnel fly on board. If the customer has a firm requirement for non-NASA flight support personnel, the individuals must be medically cleared by the NASA flight medicine clinic and will be required to complete a short physiological training course, which may be arranged by NASA at JSC. Additionally, customer flight support personnel must have boarding orders approved by the Flight Operations Directorate.

NOTE

Request for boarding orders requires considerable advance notice.

APPENDIX A
ACRONYMS AND ABBREVIATIONS

A	Amp
ACL	Allowable Cabin Load
AGL	Above Ground Level
AISC	American Institute of Steel Construction
AOD	Aircraft Operations Division
ASTM	American Society for Testing and Materials
AVG	Average
AWS	American Welding Society
BW	Bandwidth
C	Celsius
CAD	Computer Aided Design
CCPD	Configuration Control Panel Directive
CG	Center of Gravity
CLT	Cargo Lift Trailer
COTS	Commercial off-the-shelf
dB	decibel
DOT	U.S. Department of Transportation
DWG	Drawing
ECS	Environmental Control System
ECU	Environmental Control Unit
EDMS	Electronic Document Management System
EQ	Equal
F	Fahrenheit
FAR	Federal Aviation Regulation
FE	Flight Engineer
FEM	Finite Element Model
FS	Factor of Safety Fuselage Station
ft	feet
ft/min	feet per minute
ft-lbf	foot-pounds force

G	gravity
GVT	Ground Vibration Testing
HYD	Hydraulic
Hz	Hertz
IAW	in accordance with
in-lbs	inch-pounds
ISS	International Space Station
JPR	JSC Procedural Requirement
JSC	Johnson Space Center
L/H	Left Hand
lbs	pounds
lbs/in	pounds per inch
lbs/sqft	pounds per square feet
MAX	Maximum
MIN	Minimum
mph	miles per hour
MS	Margin of Safety
N	Newton
No.	Number
N/m^2	Newton per square meter
NASA	National Aeronautics and Space Administration
NFPA	National Fire Protection Association
NPR	NASA Procedural Requirement
NSTS	NASA Space Transportation System
OCCP	Operation & Configuration Control Panel
P/N	Part Number
PL	place
PQF	Payload Questionnaire Form
psi	pounds per square inch
psi/min	pounds per square inch per minute
psia	pounds per square inch absolute
PV/S	Pressure Vessels/Systems

Qty	Quantity
R/H	Right Hand
R	Radius
REF	Reference
RMS	root mean square
SDS	Safety Data Sheet
SEC	seconds
SGT	Super Guppy Transport
SLA	Sealed Lead Acid
SOP	Standard Operating Procedure
SPCS	Spaces
SPL	Sound Pressure Level
S_{ut}	Material ultimate tensile strength
S_y	Material yield strength
THK	Thick
TOD	Time of Day
TWR	Tower
TYP	Typical
ult	Ultimate
UNF	Unfinished
UPS	Uninterruptible Power Supply
U.S.	United States
USAF	United States Air Force
USG	U.S. Gallon
VAC	Volts Alternating Current
VDC	Volts Direct Current
Wh	Watt hour
yld	yield
ZFW	Zero Fuel Weight
&	ampersand
′	foot
″	inch

°	degree
∅	diameter
+	plus
@	symbol indicating "at"
=	equal
-	minus
µF	microfarad
×	multiplication
#	number sign
≥	greater than or equal to
±	plus or minus

APPENDIX B
AIRLIFT PLANNING CHECKLIST

This checklist is designed to be a guide for the customer during the payload planning stage. It is not exhaustive and is subject to change depending on the unique nature of each mission.

	User's Guide Reference Section	Responsible Individual	Status[a]	Notes
Payload Considerations				
Has the estimated payload weight and Center of Gravity (CG) been provided to NASA?	6.5			
Is the total cargo weight within capacity, based on the flight path? [in no case greater than 48,000 pounds (lbs)]	6.7			
Does the installed payload meet the longitudinal and vertical CG requirements for the entire aircraft?	6.5			
Has adequate clearance (payload to SGT) been demonstrated?	6.4, 7.5.1			
Is the design and/or identification of all airlift components (fixtures, dunnage, etc.) complete?	—			
Does the payload have the necessary features to interface with the pallet? If a NASA pallet is not used, does the payload have provisions to interface with aircraft floor rollers and lock pin interfaces?	7.5			
Has the payload been analyzed for flight load factors and crash load factors?	6.8			
Do all cargo elements have a positive Margin of Safety (MS)?	7.2			
Can the weight of the integrated payload be distributed on the cargo bay roller system within the aircraft floor load limits?	6.7, 7.5.2			
Do all safety critical fasteners have a locking feature?	7.5			
Has differential thermal expansion been considered for the shipping fixture?	7.5			
Has the impact strength of materials subject to brittle transition at low temperatures been tested?	7.5			

[a] Open, Closed, or Revisit

[b] Required for Airworthiness Review

	User's Guide Reference Section	Responsible Individual	Status[a]	Notes
Payload Considerations (Continued)				
Has a lift plan been developed?	—			
Is power required to be provided to the payload?	6.3			
Is an Environmental Control System/Unit (ECS/ECU) is required for the payload?	6.9			
Are any sensors or data collection devices required?	6.3			
Is a payload cover required for transport?	7.5.11			
Is the payload covering adequately vented to account for pressure differentials?	—			
Are there any hazardous items or pressure systems included in the payload?	7.6			
Are any materials exposed to possible ignition sources flame retardant?	7.5.11			
Have all batteries been reviewed by NASA and deemed safe for flight?	7.5			
Have weld procedures for safety critical areas been approved by NASA prior to welding?[b]	7.5.7			
Payload Documentation				
If pressure systems are included in the payload, has NASA provided pressure systems approval and/or generated an Operation & Configuration Control Plan (OCCP)?[b]	7.5, 7.6			
Do safety critical materials and hardware have material test reports and certification paperwork?[b]	7.5			
Have stress analysis report(s) been delivered to NASA covering the prescribed topics, including thermal analysis and weld analysis?[b]	7.3, 7.5			
Has the operations risk analysis been completed for hazardous items included in the payload?[b]	7.7			

[a] Open, Closed, or Revisit

[b] Required for Airworthiness Review

	User's Guide Reference Section	Responsible Individual	Status[a]	Notes
Payload Documentation (Continued)				
Have payload configuration drawings been provided to NASA for review prior to fabrication?[b]	7.7			
Have payload configuration drawings that have been provided to NASA been signed and formally released?[b]	7.7			
Have all electrical interfaces been identified and associated wiring schematics been provided to NASA?	6.3			
Have all electrical power requirements, including steady state, peak, and in-rush currents been provided to NASA?	7.6.12			
Has NASA Quality signed off, confirming that the as-built hardware configuration matches the design?[b]	7.7			
Have weld procedures and inspection reports of safety critical areas been provided?[b]	7.5.7			
Have final as-measured mass properties, including total cargo weight and CG location in all three directions (x, y, z) been provided to NASA?[b]	7.4			
Has the payload installation checklist been completed?[b]	7.7			
Has a list of additional items (besides the primary payload) to be flown been provided to NASA?[b]	7.7			
Have safety assessment reviews been completed and compliance data package submitted 4 weeks prior to shipment?	7.6			
Does any documentation need to be transported with the payload?	—			

[a] Open, Closed, or Revisit

[b] Required for Airworthiness Review

	User's Guide Reference Section	Responsible Individual	Status[a]	Notes
Pre-Mission Activities				
Who are the mission planning leads?	11			
What are the departure and arrival airports?	10.2			
What is the planned mission start date?	—			
Has an airlift mission timeline been created?	—			
Will a final review be required prior to the airlift?	—			
Has the NASA airworthiness review been completed?	7.7			
Is a customer representative required to fly on board? (not typical)	11.2			
Departure Airfield Activities				
Who is the primary contact at the departure airfield?	—			
What is the on-load date?	11.2			
Has a location at the airfield been identified for on-loading activities?	—			
Have permits/badges been arranged to access airfield? Has a personnel list been provided to NASA?	—			
Has ground transportation to the airfield been coordinated?	—			
Have United States (U.S.) Department of Transportation (DOT) permits for ground transportation been coordinated?	—			
Has a crane been secured for on-load activities? Loader preparation (i.e., personnel tying down load)?	—			
Are there any airfield conflicts/ specific weather concerns at the departure airfield?	10.2			
What loader will be used for on-loading activities? Readiness (i.e., servicing, coordination with USAF)?	—			

[a] Open, Closed, or Revisit

[b] Required for Airworthiness Review

	User's Guide Reference Section	Responsible Individual	Status[a]	Notes
Departure Airfield Activities (Continued)				
When will the loader arrive at the airfield?	—			
Will fuel be required for the SGT at departure airfield?	10			
Is the required ground support equipment available?	10.1			
Is any public affairs interaction planned?	—			
Arrival Airfield Activities				
Have ground vehicles been coordinated for the flight crew?	—			
Who is the primary contact at the arrival airfield?	—			
What is the off-load date?	11.2			
Has a location at the airfield been identified for off-loading activities?	—			
Have permits/badges been arranged to access airfield? Has a personnel list been provided to NASA?	—			
Has payload ground transportation from the airfield been coordinated?	—			
Have U.S. DOT permits for ground transportation been coordinated?	—			
Has a crane been secured for off-load activities? Loader preparation (i.e., personnel tying down load)?	—			
Are there any airfield conflicts/ specific weather concerns at the arrival airfield?	10.2			
What loader will be used for off-loading activities? Readiness (i.e., servicing, coordination with USAF)?	—			
When will the loader arrive at the airfield?	—			
Will fuel be required for the SGT at arrival airfield?	10			
Is required ground support equipment available?	10.1			
Is any public affairs interaction planned?	—			
Have ground vehicles been coordinated for the flight crew?	—			

[a] Open, Closed, or Revisit

[b] Required for Airworthiness Review

Additional Notes: